Service Manual

Repairs and maintenance

Section 8 (87)

Air conditioning
240, 260
1975–

VOLVO

Volvos are sold in versions adapted for different markets. These adaptions depend on many factors including legal, taxation and market requirements.

This manual may therefore show illustrations and text which do not apply to cars in your country.

Order No TP 30461/1

This manual supersedes:

TP 11633/1 240 Air conditioning
TP 11248/1 260 Air conditioning
TP 11584/1 240 Air conditioning (USA/Canada)
TP 11412/2 260 Air conditioning (USA/Canada)

We reserve the right to make alterations

Contents

	Operation	Page
Specifications		2
Special tools		4
General repair instructions		
Damaged caused by dirt, moisture etc		6
Receiver/Dryer		6
Lubricating oil		6
Installing new system		6
Leakage		7
Safety precautions		7
Fault tracing		8
Modifications throughout the years		12
Draining refrigerant	A 1–4	15
Filling refrigerant	B 1–21	16
Lead test	B 22–27	21
York compressor (240 petrol/gasoline)		
B 20 engines	C 1–3	23
B 21 engines	C 4–12	24
Oil level check	C 13–15	26
Clutch replacement (in car)	C 16–20	27
Disassembly-assembly	C 21–44	28
Sankyo compressor (240 Diesel)		
Removing – fitting – belt adjustment	D 1–5	33
Replacement (compressor removed):		
Clutch, pulley, carbon seal	D 6–24	34
Bearing, magnet	D 6–24	34
Valve plate	D 26–29	39
Delco compressor (6-cyl. petrol/gasoline)		
Removing – fitting – belt adjustment	E 1–3	40
Replacing: clutch, pulley, bearing, magnet	E 4–5	41
Disassembly – assembly	E 6–45	42
Evaporator, replacement	F 1–8	50
Evaporator thermostat, replacement, modification	F 9–15	52
Inspection	F 16–20	54
Expansion valve (near evaporator), replacement	G 1–5	55
Expansion valve – suction discharge valve on dryer, replacement	H 1–5	56
Condenser, replacement	J 1–4	57
Receiver/dryer, drying agent (desiccant) replacement	K 1–6	58
Refrigerant hoses	L 1	60
Heater control valve, checking	M 1	60
AC compensation (idle speed compensation)		
Carburetted engines	N 1–5	61
Injected engines	N 6–16	63
Wiring diagrams:		
240, 1975–1977		68
260, 1975–1977		69
240, 260, 1978		70
240, 260, 1979		71
240, 260, 1980		72
240, 260, 1981–		73

Index page 74

Specifications

Performance test, see page 21

Air conditioning 240

Refrigerant, type		R 12 (diclorodifluoromethane)
quantity	1975–1978	1.1 kg 2.4 lbs
	1979–	1.3 kg 2.9 lbs
	1980–	1.3 kg 2.9 lbs

Compressor York (Petrol/Gasoline engines)

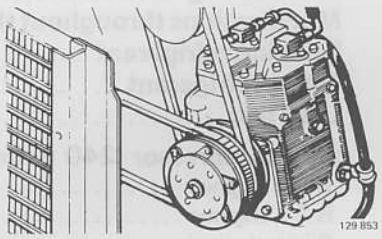

Type (1975–1978)	**York A 209**
No. cylinders	2
Swept volume	147 cm^3 (9.0 in^3)
Max. rev.	100 r/s (6 000 r/min)
Lubricating oil capacity	300 cm^3 (0.64 US pint)
Type (1979–)	**York A 210**
No. cylinders	2
Swept volume	164 cm^3 (10 in^3)
Max. rev.	100 r/s (6 000 r/min)
Lubricating oil capacity	300 cm^3 (0.64 US pint)
Lubricating oil, type	Compressor oil P/N 1 160048-3 or Suniso 5, BP Energol LPT 100, Shell Clavus 33, Texaco Capella E 500

Sankyo compressor (Diesel)

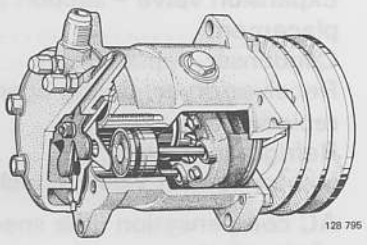

	1980–1981	1982–
Type	Sankyo SD-508	Sankyo SD-510
No. cylinder	5	5
Swept volume	138 cm^3 (8,4 in^3)	164 cm^3 (10 in^3)
Max. rev.	100 r/s (6 000 r/min)	100 r/s (6 000 r/min)
Lubricating oil capacity	135 cm^3 (0.3 US pint)	135 cm^3 (0.3 US pint)
Lubricating oil, type	Compressor oil P/N 1 160048-3 or Suniso 5, BP Energol LPT 100, Shell Clavus 33, Texaco Capella E 500	

Tightening torques

	Nm	ft. lbs.
Pulleys, engine crankshaft (outer-inner) B17–B 23	6–10	4.4–7.4
Unions, expansion valve pressure equalizing pipe	17	12.5
expansion valve	30	22
expansion valve hose	30	22
evaporator hose	30	22
condenser	17	12.5
receiver/dryer	25	18
compressor York 209/210	30	22
Sankyo SD508, SD510	30	22
Compressor, (York 209/210)		
cylinder block	20–30	15–22
bottom cover	20–30	15–22
rear bearing cover	20	15
conrod bolts	20	15
oil plug	5	3.7
Compressor clutch, center bolt	25–30	18–22
Compressor, Sankyo		
cylinder block	32	24
sealer retainer	16	12
oil plug	10	7.4
valve plate	15	11
Compressor clutch, centre bolt	38	28

Air conditioning 260

Refrigerant, type	R 12 (diclorodifluoromethane)
quantity 1975–1978	1.1 kg 3.4 lbs.
1979–	1.5 kg 3.3 lbs.

Compressor Delco

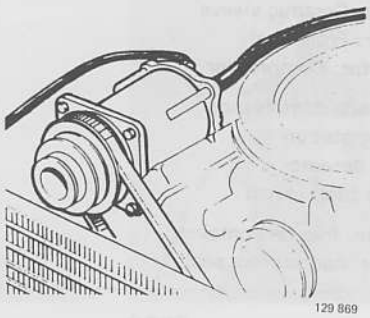

129 869

Type	**Delco**
No. cylinders	6
Swept volume (1975–1977)	150.7 cm^3 (9.2 in^3)
(1978–)	208 cm^3 (12.7 in^3)
Max. rev	91.6 r/s (5 500 r/min)
Lubricating oil, volume	310 cm^3 (0.65 US pint)
Lubricating oil, type	Compressor oil P/N 1 160048-3 or Suniso 5, BP Energol LPT 100, Shell Clavus, 33, Texaco Capella E 500

Tightening torques

	Nm	ft. lbs.
Unions, condenser	17	12.5
evaporator hose	30	22
*DWH: hose from condenser	17	12.5
hose (thick) *DWH to evaporator	30	22
hose (thin) evaporator to DWH	24	18
hose *DWH tc compressor	30	22
hose receiver/dryer (1979–)	24	18
expansion valve equalizing pipe	17	12.5
expansion valve	30	22
expansion valve hose	30	22
compressor	35	26
*DWH – Receiver/dryer incorporating equalizing valve housing		
Compressor, connection plate	14–34	10–25
rear cylinder head	26–34	19–25
compressor clutch, shaft nut	19–35	14–26
safety valve	14–19	10–14

Special tools

999	Description – Use
-1801-3	**Standard handle**
2261-9	**Puller**: Sankyo compressor
5085-9	**Press tool**:installing pulley
5132-9	**Fixture**
5133-7	**Counterhold**: compressor clutch
5134-5	**Puller**: Delco compressor pulley
5135-2	**Spacer**: Pulley
5137-8	**Drift**: Pulley
5138-6	**Drift**: Installing pulley bearing
5139-4	**Puller**: Ceramic sleeve
5140-2	**Puller**: Front seal
5141-0	**Adaptor**: Compressor
5142-8	**Support**: compressor
5143-6	**Filling station**
5144-4	**Leak detector**
5152-7	**Press tool**: clutch
5153-5	**Nipple**: free on container
9175-4	**Puller**: compressor seal

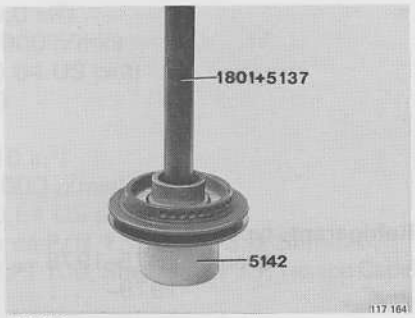

1801

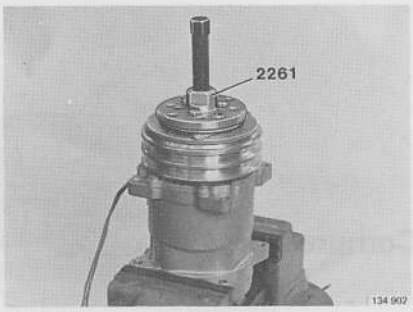

2261

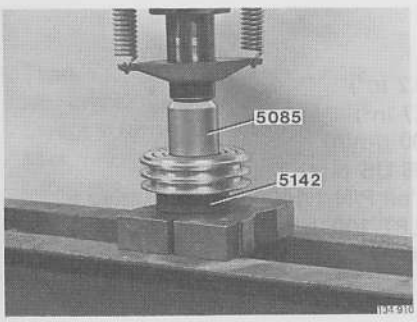

5085

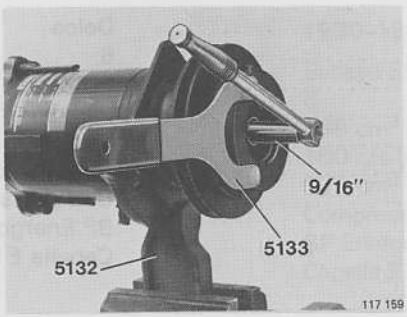

5132 5133

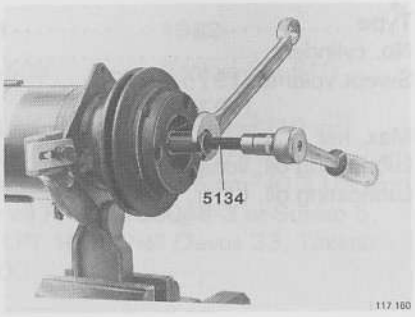

5134

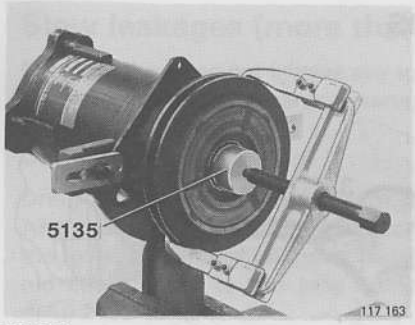

5135

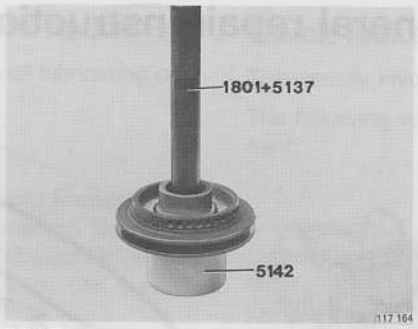

5137



5138

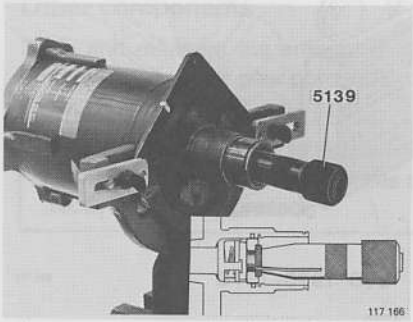

5139

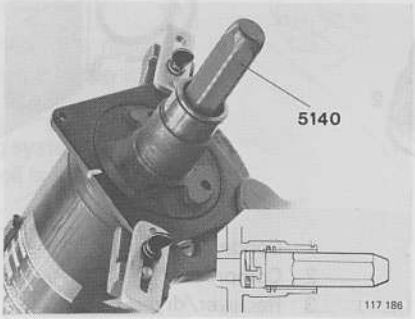

5140

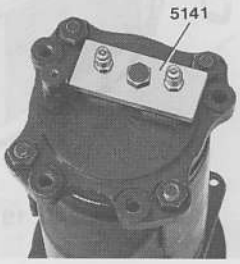

5141



5142

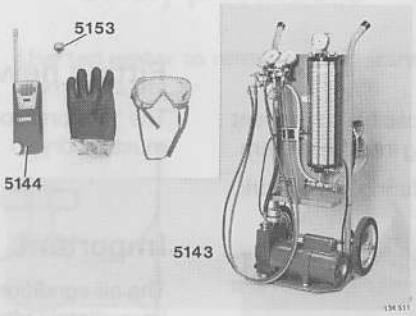

5143



5144



5152

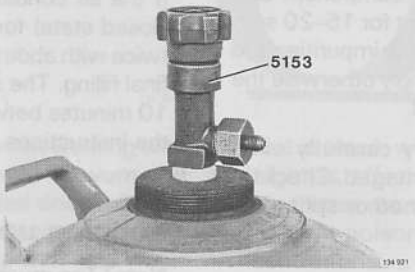

5153

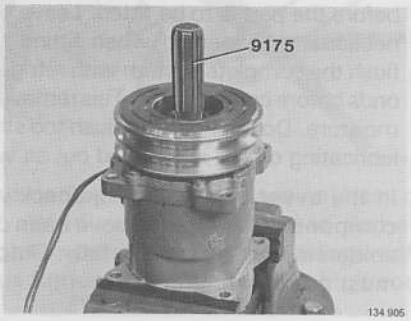

9175

General repair instructions

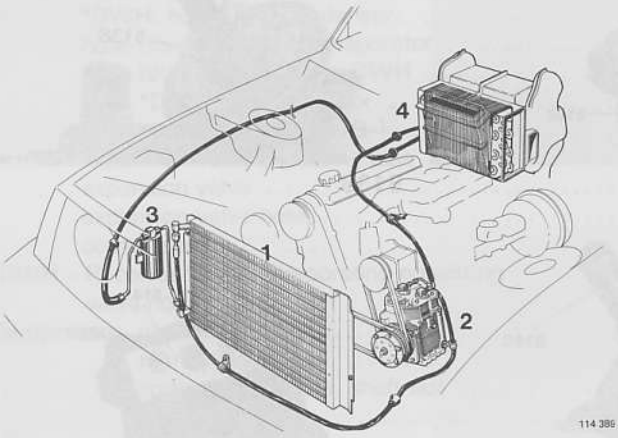

240 1978–

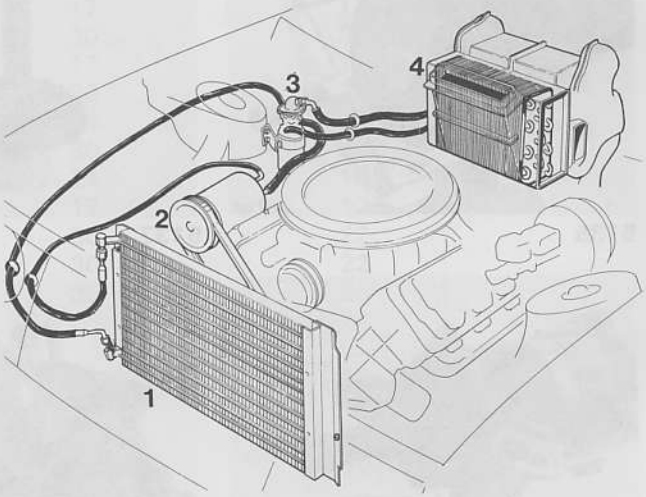

260 1975–1978

1 Condenser
2 Compressor
3 Receiver/dryer
4 Evaporator

Caution

All leaks must be rectified as soon as possible to prevent moisture or foreign particles from entering into the system.

To reduce the risk of moisture ingress during repairwork, keep surfaces dry and clean.

The compressor lubricating oil should be stored in an air-tight container otherwise it will absorb moisture from the air.

Do not remove the protective plugs on new parts until just before the part is to be fitted. Leave one of the hose connections unconnected when fitting the component and flush the complete system with refrigerant for 15–20 seconds before connecting it. This removes any impurities and moisture. Do not however flush too strongly otherwise the lubricating oil will be flushed out as well.

In the event of a collision, check very carefully every component, which may have been damaged. Check the soldered joints extra carefully. Deformed or split pipes must not be repaired.

*Receiver/dryer

The receiver/dryer, or the drying agent, should be replaced after major repairs involving leakage or when fitting new components, or if moisture is suspected in the air conditioning system.

*USA: to conform with Warranty policy, the receiver/dryer must be replaced each time the system is opened.

Fitting new air conditioning system

The compressor should contain oil. Other components must be dry.

Important

The air conditioning system must be filled with refrigerant immediately after installation to minimize the risk of corrosion. For instructions on how to fill the system see page 16.

If the air conditioning system has been left empty (in a closed state) for more than 24 hours it must be flushed twice with about 200 grams (0.5 lb) refrigerant before the final filling. The system must also be evacuated for about 10 minutes between the first and second flush. Following the instructions on page 16.

Topping up with lubricating oil

Note! Too much oil causes poor cooling. Too little will damage the compressor.

Top up the compressor after repairing a leak or replacing one or more of the components in the system.

Slow leakages (more than 24 hours)

Normally this does not involve any loss of lubricating oil. When replacing components observe:

Compressor

Drain and measure the oil from the old compressor. Also drain the oil from the new compressor. Then add the same amount of oil (new), as was drained from the old compressor to the new compressor. (At least 1 dl=0.2 US pint)

Other components

Drain and measure the amount of oil. Add the required amount of oil to the new component before fitting it.

This does not apply to air conditioning systems with York compressors. In such cases all oil is added directly to the compressor.

Quick leakages (e.g. burst hose)

This usually involves a loss of lubricating oil.

The following volumes apply when fitting a new component.

	dl	US pint
Compressor	1.5	0.3
Evaporator	0.7	0.15
Drier	0.5	0.1
Condenser	0.5	0.1
Hose	0.5	0.1

Safety precautions

Always wear tight fitting safety glasses when there is danger of refrigerant loss.



Use tap water to remove refrigerant from eyes etc.

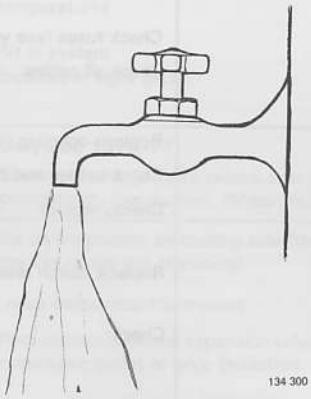

Safety glasses should always be worn when working with or near refrigerants. **Rubber gloves should be worn and all form of skin contact should be avoided since refrigerants cause frostbite.** If refrigerant should contact the eyes or skin, splash the eyes or affected area with cold water (preferably for 15 min) and treat the injury in the same way as for a frostbite.

WARNING!

Gases formed by heating refrigerant are a serious health risk and can cause serious lung damage.





Get in touch with a doctor if the injury does not heal, or sight is affected. Avoid working near naked flames, cigarettes etc. High temperatures cause the refrigerante to form poisonous fumes which are toxic in high concentrations.

Note! The gases can cause serious lung damage even in low concentrations. The symptoms may not become evident for several hours or perhaps even a day later.

WARNING – EXPLOSION RISK!

Do not subject refrigerant containers to high temperatures.

Fault tracing

How to use the Fault Tracing tables
Find out the most possible cause of the fault by checking the crosses on the left. Check each item (start with items which are easy to check). Note that the faults are not listed in order of probability.

If it is not possible to locate the fault, pressure test the system to check for internal faults, see pages 10 & 11.

Symptom: No cooling	Poor cooling	Intermittent cooling	Noise	Possible cause	Remedy
				Electrical faults:	
X				Blown fuse	Check fuses (see wiring diagram)
X				Poor connection or short (compressor does not operate)	Check all cables
X				Compressor coupling burnt	Replace coupling (see section on compressor)
X				Fan motor (blower), does not operate	Check cables and motor
	X	X		Fan motor (blower), poor operation (loose or cracked motor)	Check/replace
		X	X	Broken or poor connection in compressor clutch winding (clutch moves in and out)	Replace clutch (see section on compressor)
			X	Fan motor screeches or contacts fan shroud	Check
				Mechanical faults	
X	X		X	Drive belt too loose or cracked	Tension or replace belt. See section on compressor.
X	X			Heater control valve leaks in "COOL"	Check valve. See page 60
	X			Air ducts blocked	Check and clean
	X			Air inlet in front of windscreen/shield blocked	Check and clean
			X	Clutch bearing worn or off-centre	Replace bearing. See section on compressor.
	X		X	Compressor worn or loose	Recondition compressor. See section on compressor
			X	Low oil level in compressor (260) (warm underneath)	Drain system. Measure amount of oil in compressor. Must be at least 1.5 dl (0.3 US pint) refit compressor, replace drying agent in receiver/dryer and refit system. See page 40.

Symptom: No cooling	Poor cooling	Intermittent cooling	Noise	Possible cause	Remedy
				System faults	
X				Evaporator thermostat does not disengage compressor.	Check/replace thermostat. See page 54.
X				Expansion valve stuck in open position	Replace. See page 55.
X				Leakage	Top-up system. Find leakage and repair. See page 16.
X				Blocked hose or component	Check flow through each component.
X				No refrigerant in system	Add refrigerant. See page 16.
	X			Air flow through condenser blocked	Clean condenser
	X			Evaporator blocked on air cooling side	Clean off dirt etc.
	X			Evaporator thermostat incorrectly adjusted	Check thermostat. See page 54.
	X		X	Insufficient refrigerant (whistling noise from evaporator near expansion valve, bubbles in sight glass)	Drain and refill system. See pages 15–16.
	X			Expansion valve capillary tube damaged	Replace. See page 55.
	X			Receiver/dryer blocked	Replace. See page 58.
	X	X		Moisture in system. Cooling capacity good at start (few minutes) then poor. Or poor operation at high ambient temperatures	Drain system, replace receiver/dryer or dying agent, fill with refrigerant. See page 15.
	X			Air in system (bubbles in sight glass)	Drain system, replace receiver/dryer or dying agent, fill with refrigerant. See page 15.
		X		**Only 260 1975–77:** Suction discharge valve seized. Low pressure in front of compressor, low suction. (Moisture in system)	Replace valves on receiver/dryer. See page 56.
		X		Ice on evaporator air cooling side (thermostat adjusted too low or fan not operating)	Check evaporator thermostat. See page 54. Test with fan on.
		X		Loose evaporator thermostat	Check/replace. See page 54.
		X		Poor contact between expansion valve capillary tube and evaporator outlet or poor insulation	Check
		X		Too large a difference between off and on for evaporator thermostat	Replace. See page 54.
			X	**System overfull** causes crashing noise or vibrations from high pressure lines, clicking noise from compressor, excessive compressor pressure and suction pressure, hissing noise from expansion valve, bubbles or vapour in sight glass. If compressor valves damaged by overfilling, compressor pressure will be too low	Drain System. Refill according to pages 15–16.
			X	Moisture in system, can cause noise from expansion valve.	Drain system, replace/receiver/dryer or drying agent, fill with refrigerant. See page 15, 16, 58.

Fault tracing Pressure testing

A separate pressure gauge kit or the pressure gauges on the filling station (5143) should be used for the following tests.

See next page for pressures.

Low pressure side	High pressure side	Cause	Remedy	See page	Operation
Low	Normal	1. Expansion valve blocked or seized in closed position	*1. Remove blockage. Replace valve if necessary.	55	G 1–4
		2. Expansion valve capillary tube damage – liquid loss.	*2. Replace expansion valve.	55	G 1–4
		3. Moisture in system, causes ice in expansion valve.	3. Drain system. Replace receiver/dryer. Evacuate system and fill.	15, 16	A 1–4 B 1–26
Low	Low	1. Not enough refrigerant	*1. Drain system, Evacuate and fill	15, 16	B1–26
		2. **Only 260 1975–1977** No bubbles in sight glass, pressure gauge readings very low. Possibly no refrigerant in sight glass. This can cause large leakage. Expansion valve can be blocked or seized in open position.	2. Replace expansion valve. Fill system	56	H 1–5
Low	High	1. Blockage in receiver/dryer or connecting pipes.	1. Replace. Remove blockage.	58	K 1–6
High	Normal	1. Expansion valve seized in open position.	*1. Replace	55	G 1–4
		2. Expansion valve coil against evaporator outlet, loose or poorly insulated.	2. Secure coil and insulate.		
		3. Not enough refrigerant. Possibly bubbles in sight glass.	3. Drain system. Evacuate and fill.	15, 16	A 1–4 B 1–26
High	Low	1. Defective compressor	1. Repair/replace. Replace receiver/dryer.	See section on compressor	
Normal–High	High	1. Too much refrigerant	1. Drain system. Evacuate and fill	15, 16	A 1–4 B 1–26
		2. No cold air reaches condenser	2. Remove obstruction. Check cooling fan and belts.		
		3. Blockage in high pressure side	3. Remove blockage.		
		4. Engine radiator overheated	4. Improve cooling		
		5. Air in system. Poor evacuation and filling of refrigerant.	5. Drain system. Replace receiver/dryer. Evacuate and fill according to instructions.	15, 16	A 1–4 B 1–26
Normal	Normal	1. Moisture in system, occasional formation of ice. Low pressure side pressure varies. Cooling ability OK in cool conditions but poor or non existent in hot weather.	1. Drain system. Replace receiver/dryer. Evacuate and fill according to instructions	15, 16	A 1–4 B 1–26

* USA vehicles:
To conform with Warranty policy, the receiver/dryer must be replaced each time the system is opened.

Test conditions (240, 260)

	1975–1978	1979–
Bonnet/hood	Open	Closed
Front doors	Open	Closed
Engine speed	33 r/s (2 000 r/min)	33 r/s (2 000 r/min)

CONTROL SETTINGS

Fan speed	3 (max)	3
Temperature	Cool	Cool
FLOOR	Closed (push botton out)	Closed (push botton out)
DEF	Closed (push botton out)	Closed (push botton out)
REC	(push botton in)	(push botton in)
Panel vents	Open	Open
Air conditioning switch	On	On, red section

240 Petrol/Gasoline 1975–1978

Ambient temp in front of car °C (°F)	Pressure at compressor inlet bar (psi)	Pressure at compressor outlet bar (psi)
20 (68)	1.7–2.0 (24–28)	10–13 (139–181)
30 (86)	2.2–2.7 (31–38)	13–16 (181–223)
40 (104)	3.0–3.4 (42–47)	18–22 (250–307)

240 Petrol/Gasoline 1979–

Ambient temp in front of car °C (°F)	Pressure at compressor inlet bar (psi)	Pressure at compressor outlet bar (psi)
20 (68)	1.2–2.6 (17–36)	6.5–9.0 (91–125)
30 (86)	1.4–2.6 (19–36)	8.0–12.0 (111–167)
40 (104)	1.3 (18)	14.8 (206)

240 Diesel 1980–

Ambient temp in front of car °C (°F)	Pressure at compressor inlet bar (psi)	Pressure at compressor outlet bar (psi)
20 (68)	1.0–2.7 (14–37)	6.7–10.9 (93–152)
30 (86)	1.0–2.7 (14–37)	9.4–14.1 (131–196)
40 (104)	1.4 (19)	18.0 (251)

Note! Pressures refer to sea level, and can vary depending on altitude, equipment, test conditions etc.

260 Petrol/Gasoline 1975–1977

Ambient temp in front of car °C (°F)	Evaporator pressure at relief valve (low pressure) bar (psi)	Pressure at compressor outlet bar (psi)
20 (68)	1.9–2.0 (26–28)	9–13 (125–181)
30 (86)	2.2–2.7 (31–38)	15–18 (209–251)
40 (104)	2.8–3.5 (39–49)	19–23 (265–321)

260 1978–Petrol/Gasoline

Ambient temp in front of car °C(°F)	Pressure at compressor inlet bar (psi)	Pressure at compressor outlet bar (psi)
20 (68)	1.0–2.4 (14–33)	6.5–9.3 (90–130)
30 (86)	1.0–2.3 (14–32)	8.7–13.5 (121–188)
40 (104)	1.2–2.2 (17–31)	10.5–16.7 (146–233)

Modifications

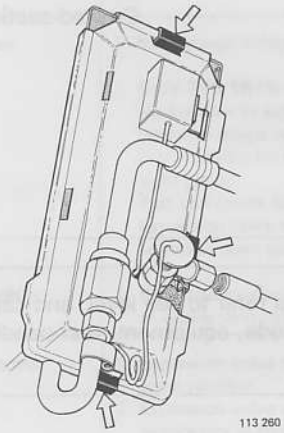

113 260

1976 model year

New evaporator housing cover

Butyl tape used to seal evaporator outlet, cover and evaporator housing.

NOTE! Expansion valve must not be insulated.

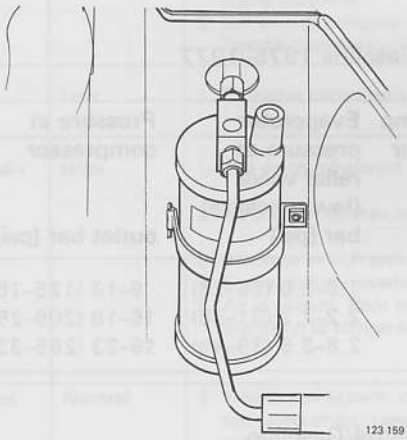

123 159

1978 model year

Receiver/dryer relocated

Receiver/dryer moved to front panel next to engine radiator. Same receiver/dryer used on 240 and 260 series.

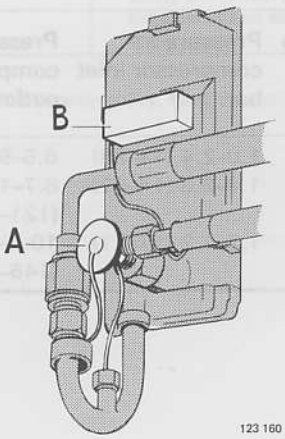

123 160

240 expansion valve and thermostat fitted on 260.

Expansion and discharge pressure valves on 260 were discontinued in 1978. The valves, which were incorporated in the receiver/dryer, have been replaced by the 240 expansion valve (A).

Same thermostat (B) is used for 240 and 260 series. Compressor does not operate constantly but only when temperature of evaporator exceeds a predetermined level.

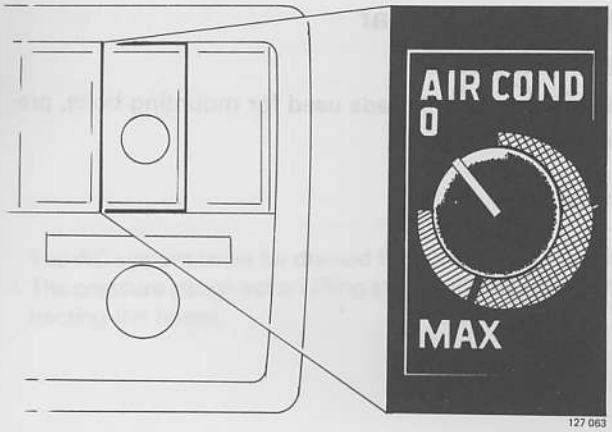

127 063

1979 model year

Adjustable thermostat

Previously the thermostat could be switched on by means of a rocker switch, and the temperature adjusted by a lever. 1979– models now have an adjustable knob.

The capillary tube now leads from the thermostat to the evaporator outlet. The function of the thermostat is the same as before.

Note! The orange section beyond MAX should only be used when quick cooling is required, and in extreme conditions such as driving in desert regions, otherwise water which has condensed on the evaporator will freeze and obstruct the passage of air.

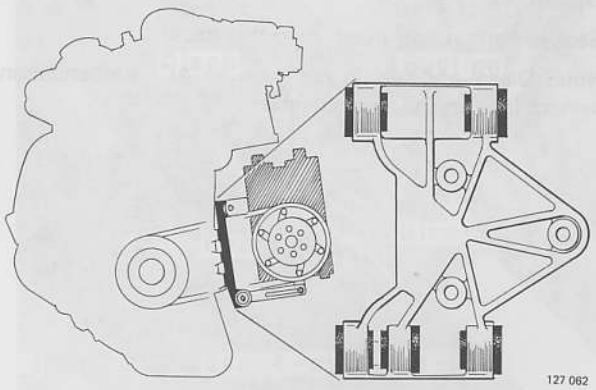
127 062

240

Rubber mounted compressor (applies to vehicles without power steering).

Larger capacity compressor (240 petrol/gasoline only).

York A 210. Capacity 164 cm^3(10 in^3) (previously 147 cm^3(9.0 in^3).

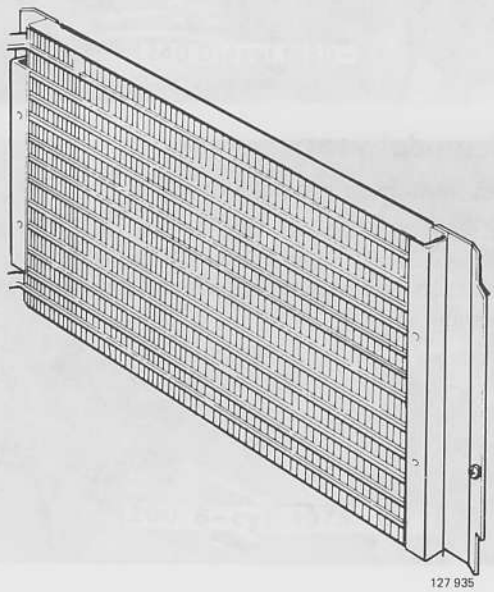
127 935

Larger condenser

Refrigerant volume increased accordingly:

240:1.3 kg (2.9 lbs)
260:1.5 kg (3.3 lbs)

New type of AC compensation for engine

Operates in principle by supplying extra fuel-air (carburetted engines or air (injected engines) to engine when compressor is engaged.

The system comprises a solenoid valve, a vacuum valve and vacuum hoses.

See AC compensation, pages 61–67

1980 model year

260 compressor

Millimetre (mm)threads used for mounting bolts, previously inches.

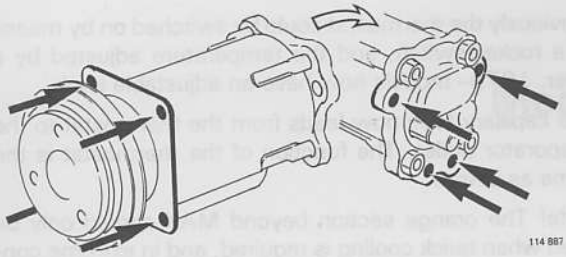

114 887

Diesel

Sankyo compressor used, m m threads.

Note! Diesel engines do not have an AC compensation system (idle speed compensation).

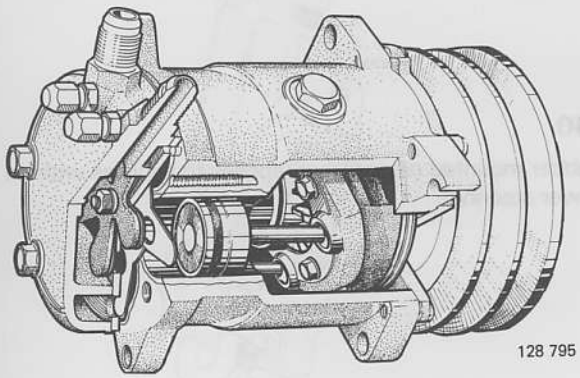

128 795

Delayed engagement of compressor

Delay relay fitted to 1980– vehicles, engages compressor approx. 10 seconds after engine start and relay receives alternator voltage.

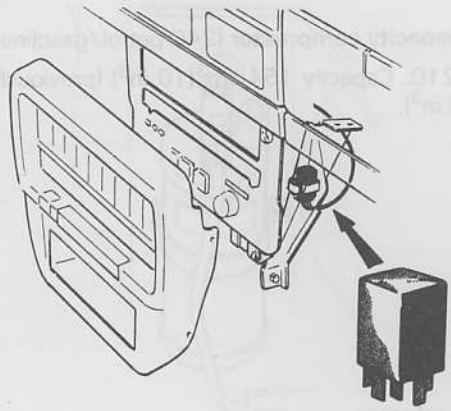

135 796

1981 model year

Cut-out switch on receiver/dryer

(USA only)

Senses the receiver/dryer pressure. If this is too low, the switch cuts off the current to the compressor, thus preventing damage.

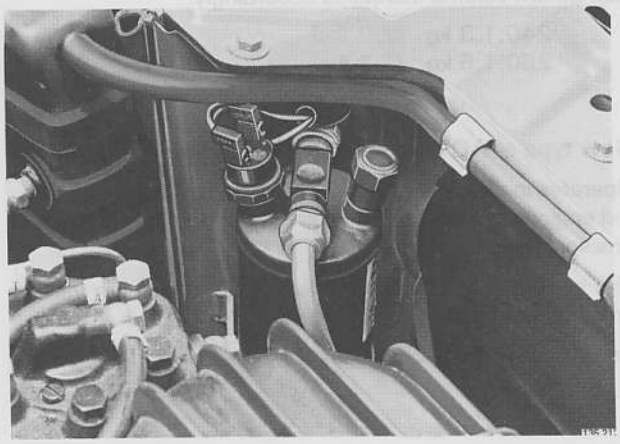

A. Draining refrigerant

Special tool: 5143

Read the safety precautions on page 7.

The AC system must be drained if the refrigerant circuit is disconnected or if one or more of the components is replaced. The pressure gauge set on filling station **(5143)** should be used; make sure that the pressure gauges are closed before connecting the hoses.

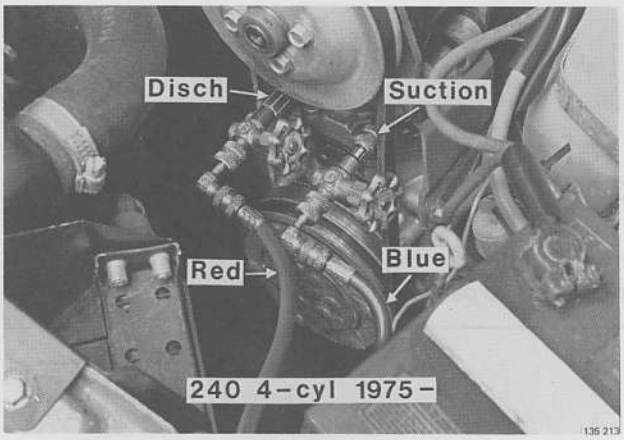

Connections

Nipples should be finger tight only.

Disconnect the battery negative lead.

A1

240 Petrol/gasoline and diesel

Remove the cover nuts and connect the blue hose to the compressor "suction" side and the red hose to the outlet side marked "disch".

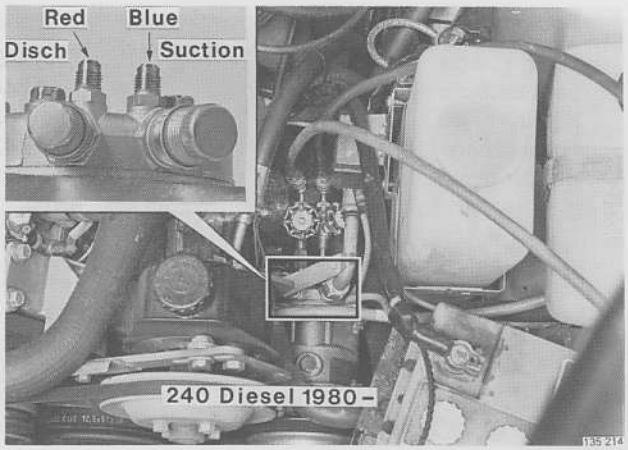

A2

260 1975–1977

Remove the cover nuts and connect the red hose (high pressure) to the compressor (small pipe) and the blue hose (low pressure) to the equalising valve on the suspension turret.

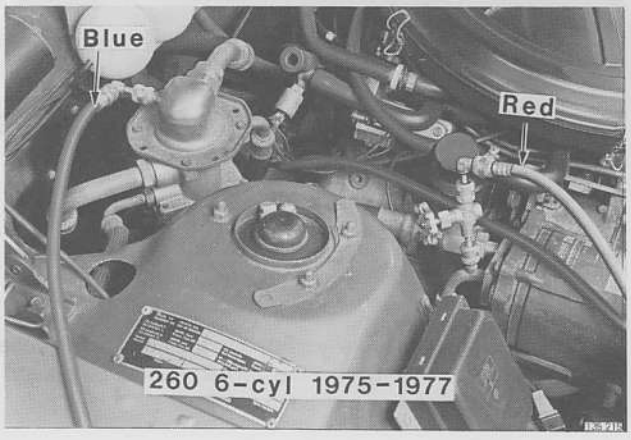

A3

260 1978–

Remove the cover nuts and connect the red hose (high pressure) to the compressor (small pipe) and the blue hose (low pressure) to the compressor (large pipe).

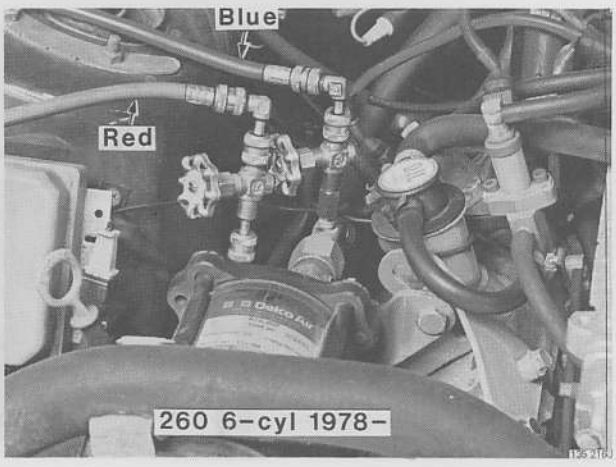

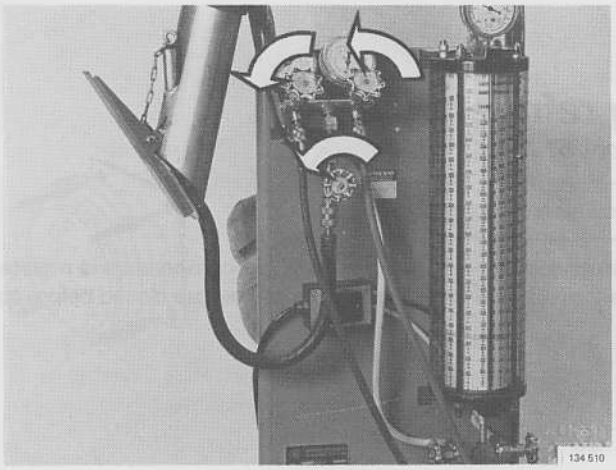

A4

The short centre hose should be placed in an exhaust gas extractor hose as a safety precaution.

Open the gauge valves and the valves on the components. Open the valve on the centre hose very carefully so that the refrigerant slowly flows out.

Caution! If the refrigerant flows out too quickly lubricating oil will be drawn out of the system.

Close the valves when the gauges indicate zero.

B. Filling refrigerant

Special tools: 5143, 5144, 5153, 9942

Read the safety precautions on page 7.

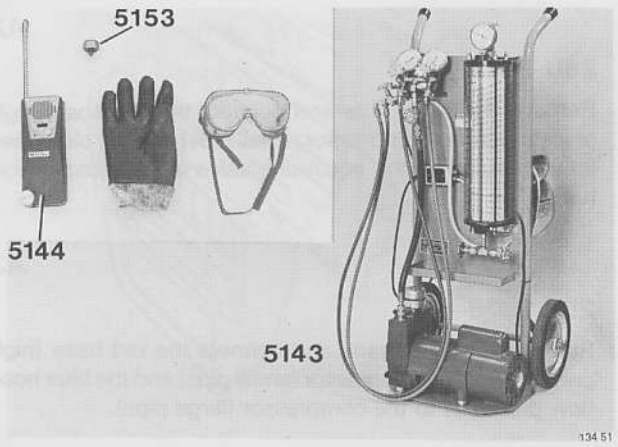

Equipment required

Filling station	5143
Leak detector	5144
Nipple	5153
Thermometer	9942

Rubber gloves, safety glasses.

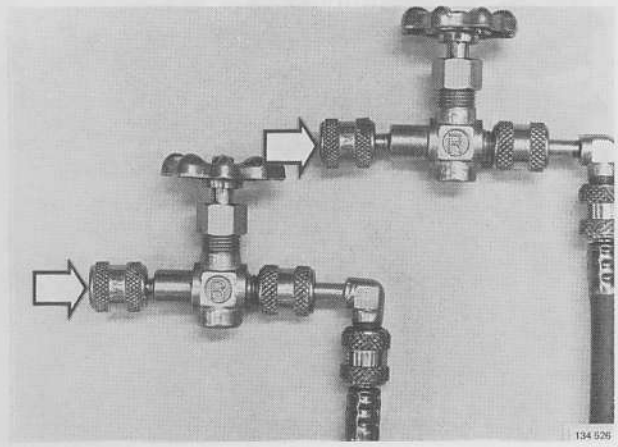

Evacuating system, filling measuring cylinder

B1

Disconnect the battery negative lead.

Check that:

- hoses and pressure gauges are correctly connected
- all valves are closed
- vent screw on vacuum pump is closed.

Make sure that spacers are fitted to the ends of the hoses. The spacers, which open the valves, should be placed in the nipples at the end of each hose.

B2

Connect hoses to component

See page 15.

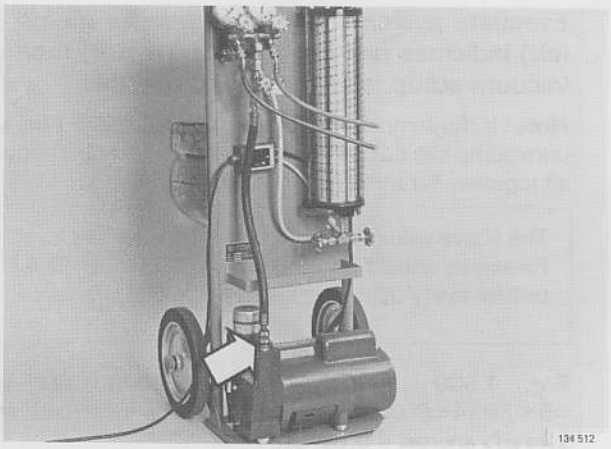

B3

Connect centre short hose to vacuum pump

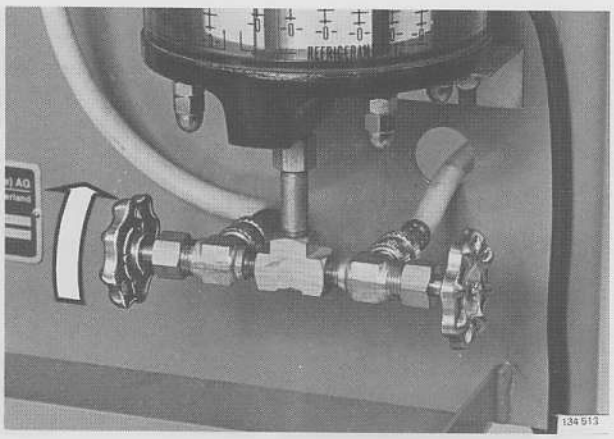

B4

Make sure that measuring cylinder is empty

This can be checked at the liquid indicator in the centre of the cylinder. If empty, it must be evacuated at the same time as the system.

Method:

Open the outlet valve on the measuring cylinder, see fig.

Caution! Do not open the valve until the cylinder is drained.

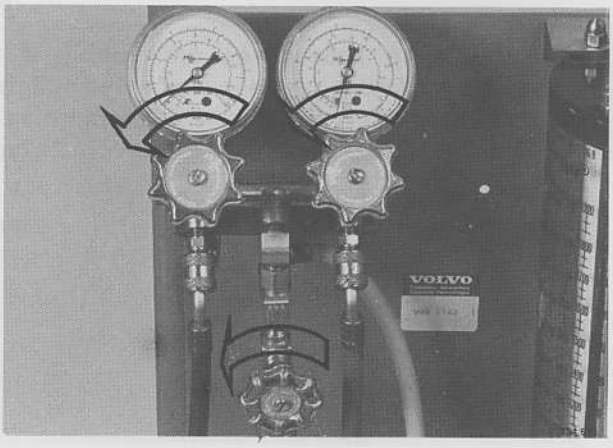

B5

Fully open gauge valves and valves at components

B6

Start vacuum pump

B7

Open the vacuum pump valve slowly (the centre valve below the pressure gauges).



B8

Turn vent screw on vacuum pump one turn clockwise

Leave the pump on 1/2–1 minute and then close the vent screw.

This is performed to remove moisture from the system and from the oil in the pump. A higher depression can be obtained in this way.

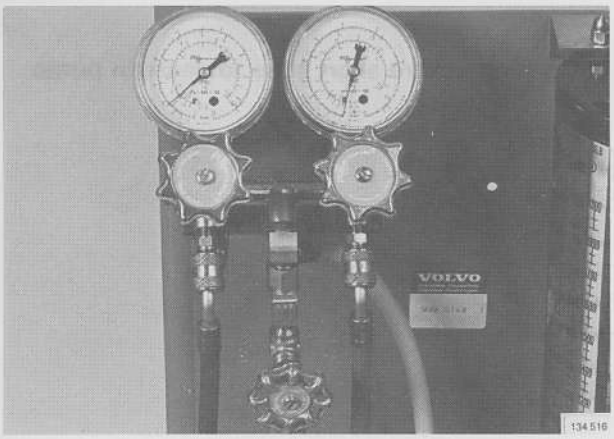

B9

Evacuate system until low pressure gauge (on left) indicates nearly – 1 bar (–14 psi), then run vacuum pump for a further 30 minutes.

Note! If the temperature **is below 30°C (86°F)** the vacuum pump should be left running for a further 20 minutes, all together 50 minutes.

> The above values are valid at (or close to) sea level. Pressures should be reduced by 0.034 bar (0.47 psi) for every 300 metres 984 ft above sea level.

E.g. 1 500 metres (4 920 ft) above sea level =5×0.034 ⇨ 0.17 bar (2.37 psi) reduced pressure ⇨ approx. – 0.82 bar.

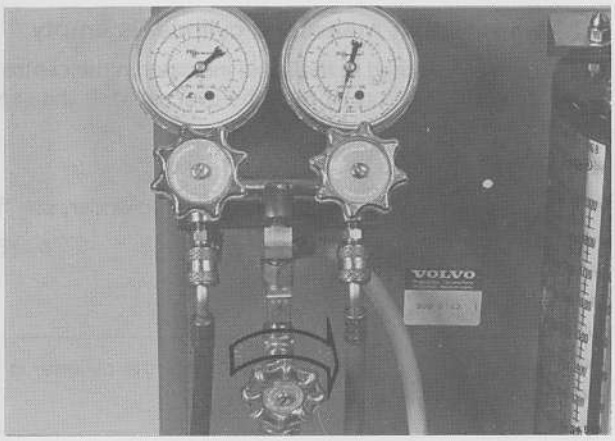

B10

Close the vacuum pump valve and also the outlet valve on the measuring cylinder (if evacuated).

Switch off the vacuum pump.

If the specified depression cannot be obtained or if it drops on closing the valves, there is a leak in the system.

Find and correct the leak and evacuate the system once more.

B11

The following procedures only apply if the measuring cylinder has been evacuated or if there is less than 1 600, 1 800 or 2 000 grammes refrigerant in it (depends on year and vehicle type).

In other cases proceed to leak testing, B16

1 600 g = 3.6 lbs, 1 800 g = 4 lbs, 2 000 g = 4.5 lbs

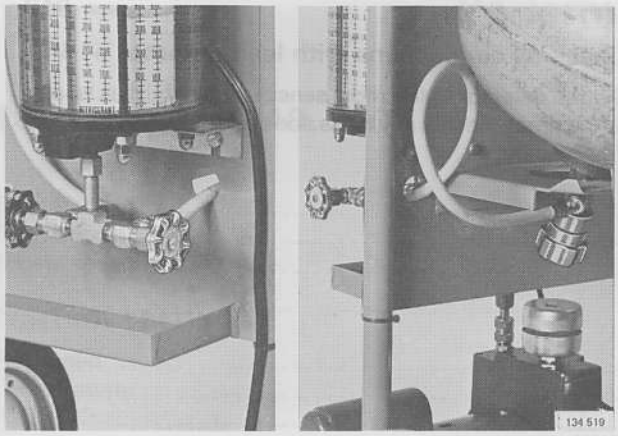

B12

Open

– valve on refrigerant container
– valve for input refrigerant on measuring cylinder.

B13

Open the upper valve **above** the measuring cylinder and transfer a few hundred grammes of refrigerant. Close the valve.

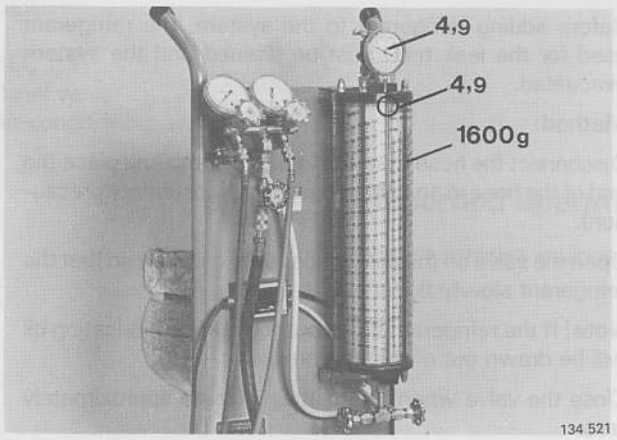

B14

Record pressure and set scale on measuring cylinder.

Turn the scale (marked R 12) to the same pressure as indicated on the pressure gauge.

E.g. pressure gauge shows 4.9. Set the measuring cylinder with the 4.9 scale above the refrigerant indicator.

Open upper valve on measuring cylinder and transfer 1 600 (3.6 lbs), 1 800 (4 lbs) or 2 000 (4.5 lbs) grammes refrigerant (depending on model year and vehicle type).

1 100 (2.5 lbs), 1 300 (2.9 lbs) or 1 500 (3.4 lbs) grammes in system plus 200 grammes for leak test and moisture removal. The rest is necessary to prevent the measuring cylinders from draining completely which would necessitate evacuating the cylinder before the next filling.

Close valve.

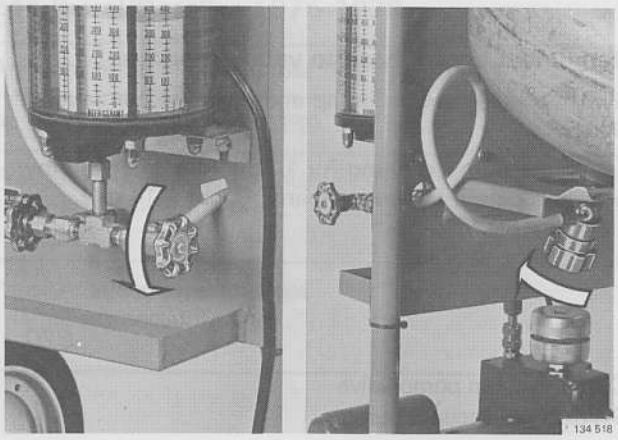

B 15

Close

– valve for input refrigerant
– valve on refrigerant container

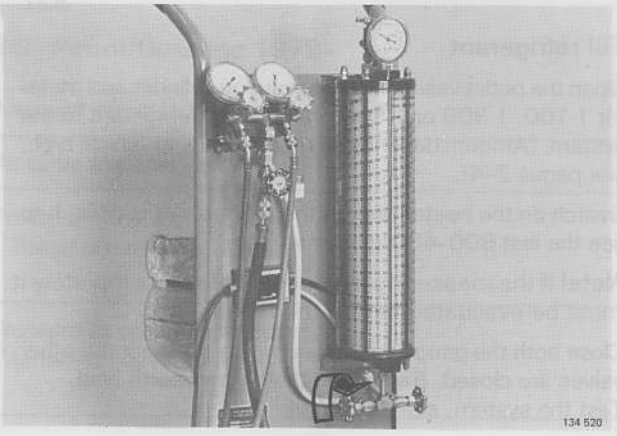

B16

Leak test

Open the outlet valve on the measuring cylinder and transfer 200 grammes (0.4 lb) of refrigerant to the system. Close the valve.



B17

Check all connections with leak detector 5144

Set the detector to the most sensitive field (buzzes **nearly** all the time). Rectify any leaks and perform a new leak test if necessary.

B18

Filling

Before adding refrigerant to the system, the refrigerant used for the leak test must be drained and the system evacuated.

Method:

Disconnect the hose from the vacuum pump and place the end of the hose in an exhaust gas extractor (safety precaution).

Open the valve on the centre hose very carefully so that the refrigerant **slowly** flows out.

Note! If the refrigerant flows out too quickly lubricating oil will be drawn out of the compressor.

Close the valve when the gauges indicate approximately zero.

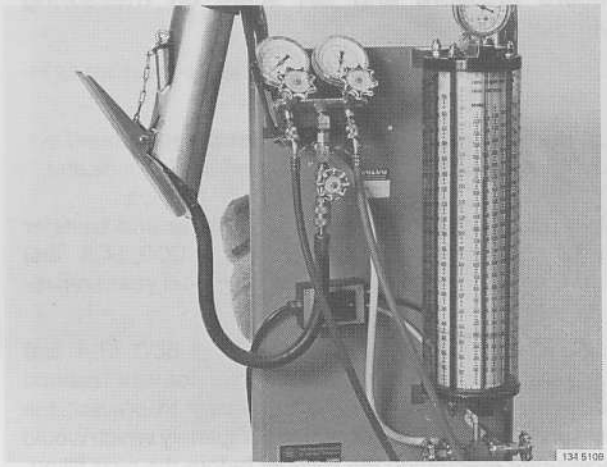

B19

Reconnect centre hose to vacuum pump.

Switch on the vacuum pump and open the pump valve slowly.

Leave the pump running for 10 minutes after the low pressure gauge indicates nearly –1 bar (–14 psi).

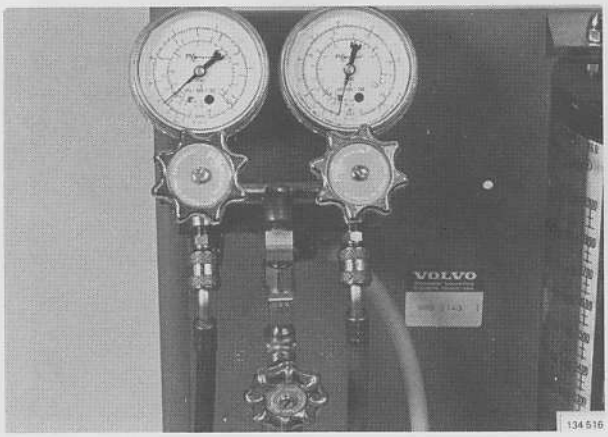

B20

Close vacuum pump valve
Switch off vacuum pump

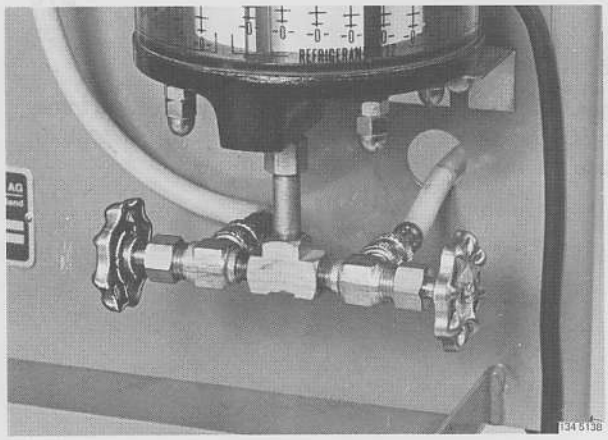

B21

Fill refrigerant

Open the outlet valve on the measuring cylinder and transfer 1 100, 1 300 or 1 500 grammes of refrigerant to the system. (Amount depends on model year and vehicle type, see pages 2–4).

Switch on the heater unit for the cylinder if it is difficult to see the last 300–400 grammes.

Note! If the measuring cylinder is drained completely it must be evacuated before the next filling.

Close both the gauge valves and make sure that the other valves are closed. Reconnect the battery earth lead. Test the system, see next page.

Performance test

B22

Test conditions (240, 260)

	1975–1978	1979–
Bonnet/hood	Open	Closed
Front doors	Open	Closed
Engine speed	33 r/s (2 000 r/min)	33 r/s (2 000 r/min)
CONTROL SETTINGS		
Fan speed	3 (max)	3
Temperature	Cool	Cool
FLOOR	Closed (push button out)	Closed (push button out)
DEF	Closed (push botton out)	Closed (push button out)
REC	(push button in)	(push button in)
Panel vents	Open	Open
Air conditioning switch	On	On, red section

Recorded operating conditions 240

Applies to vehicles equipped with a viscous coupling fan.

Note! Pressures refer to sea level, and can vary depending on altitude, equipment, test conditions etc.

B23

240 Petrol/Gasoline 1975–1978

Ambient temp in front of car °C (°F)	20 (68)	30 (86)	40 (104)
Air temp at panel vents °C (°F)	8–10 (46–50)	13–17 (55–63)	20–26 (68–79)
Pressure at compressor inlet (large connection) MPa	0.17–0.20	0.22–0.27	0.30–0.34
psi	24–28	31–38	43–48
Pressure at compressor outlet (small connection) MPa	1.0–1.3	1.3–1.6	1.8–2.2
psi	142–185	185–227	256–313

B24

240 Petrol/Gasoline 1979–

Ambient temp in front of car °C (°F)	20 (68)	30 (86)	40 (104)
Air temp at panel vents °C (°F)	9–12 (48–54)	9–12 (48–54)	9–12 (48–54)
Pressure at compressor inlet (large connection) MPa	0.12–0.26	0.14–0.26	0.13
psi	17–37	20–37	18
Pressure at compressor outlet (small connection) MPa	0.65–0.90	0.80–1.20	1.48
psi	92–128	114–171	210

B25

240 Diesel 1980–

Ambient temp in front of car °C (°F)	20 (68)	30 (86)	40 (104)
Air temp at panel vents °C (°F)	8–12 (46–54)	8–12 (46–54)	8–12 (46–54)
Pressure at compressor inlet (large connection) MPa	0.1–0.27	0.1–0.27	0.14
psi	14–38	14–38	20
Pressure at compressor outlet (small connection) MPa	0.67–1.09	0.94–1.41	1.8
psi	95–155	134–200	256

Recorded operating conditions 260

Applies to vehicles equipped with a viscous coupling fan

Note! Pressures refer to sea level, and can vary depending on altitude, equipment, test conditions etc.

B26

260 Petrol/Gasoline 1975–1978

Ambient temp in front of car °C (°F)	20 (68)	30 (86)	40 (104)
Air temp at panel vents °C (°F)	8–12 (46–54)	14–20 (57–68)	20–28 (68–82)
Evaporator pressure at relief valve MPa	0.19–0.20	0.22–0.27	0.28–0.35
psi	27–28	31–38	40–50
High pressure at compressor MPa	0.9–1.3	1.5–1.8	1.9–2.3
psi	130–185	210–256	270–320

B27

260 1979– Petrol/Gasoline

Ambient temp in front of car °C (°F)	20 (68)	30 (86)	40 (104)
Air temp at panel vents °C (8°F)	9–12 (48–54)	9–12 (48–54)	9–12 (48–54)
Pressure at compressor inlet (large connection) MPa	0.10–0.24	0.10–0.23	0.12–0.22
psi	14–34	14–33	17–32
Pressure at compressor outlet (small connection) MPa	0.65–0.93	0.87–1.35	1.05–1.67
psi	92–132	124–192	149–237

C. York compressor – B 20 engine

Removing – fitting – belt adjustment

Note! Check oil level before fitting a new or reconditioned compressor, see page 26.

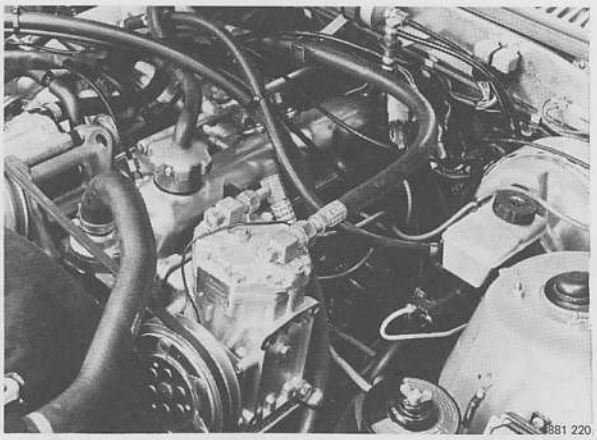

C1

Removing

Drain refrigerant from system, see page 15.

Disconnect from compressor:

– electric leads
– refrigerant hoses (plug ends immediately).

Detach the compressor from the mounting bracket.

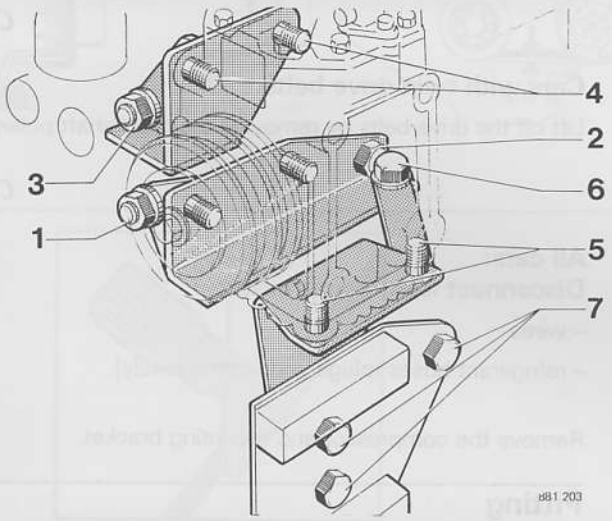

C2

Fitting

Position the compressor, do not tighten the retaining bolts yet.

Fit the stay between the centre and lower brackets.

Tighten the bolts in the order indicated adjacent.

Tightening torques:

Compressor bolts max. **30 Nm** (22 ft. lbs)
Remaining bolts **33–41 Nm** (24–30 ft. lbs.)

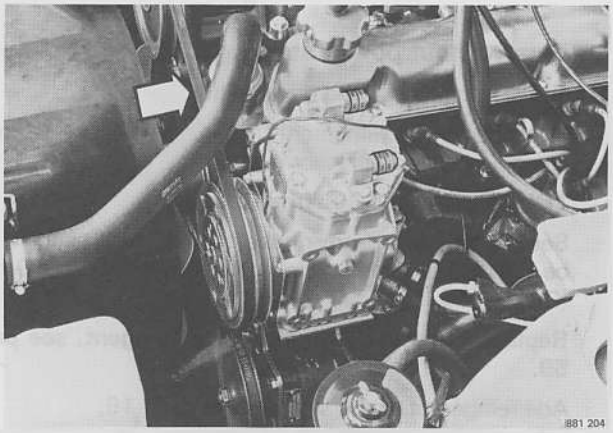

C3

Fit belt

Adjust the belt tension by means of the air pump/roller.

It should not be possible to depress the belt by more than 6–8 mm (measured between air pump – compressor). Connect the refrigerant hoses. Use new O-rings, smeared with compressor oil.

Tightening torque 30 Nm (22 ft. lbs).

Replace receiver/dryer or drying agent. See page 58.

Add refrigerant to the system, see page 16.

York compressor – B 17–B 23 engines

Removing – fitting – cleaning

Note! Check oil level before fitting a new or reconditioned compressor, see page 26.

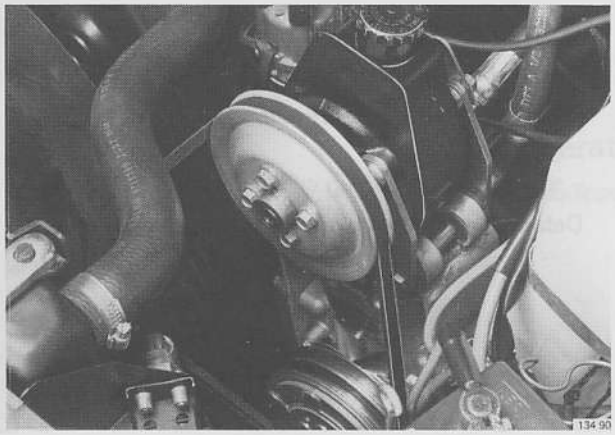

C4

Removing

Drain refrigerant from system, see page 15.

Cars with power steering

Detach the power pump and hang it from the wheel housing.

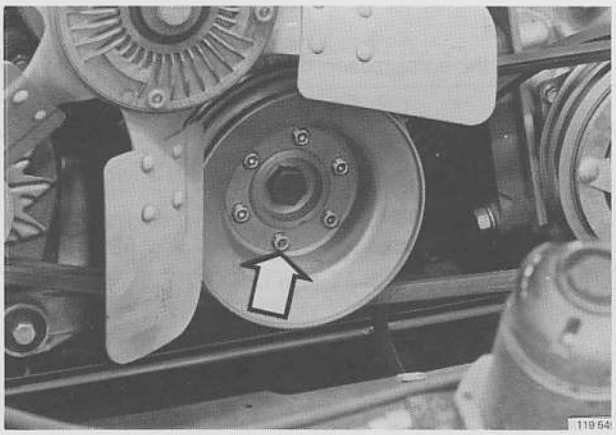

C5

Cars with twin drive belts

Lift off the drive belts by removing the crankshaft pulley.

C6

All cars:
Disconnect from compressor:

– wires

– refrigerant hoses (plugs ends immedeitely).

Remove the compressor and mounting bracket.

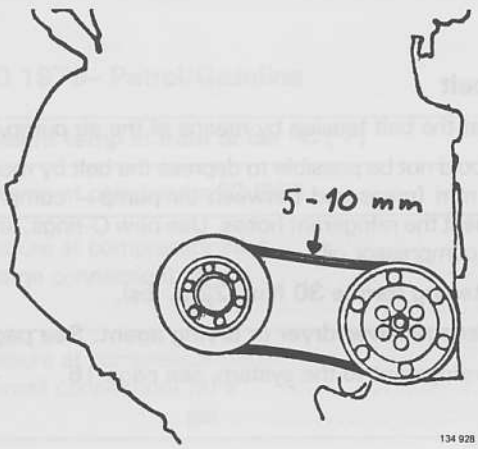

Fitting

C7

Cars without power steering

Fit the compressor and drive belt(s).

Reconnect the refrigerant hoses. Use new O-rings, smeared with compressor oil.

Tightening torque 30 Nm (22 ft. lbs)

Set belt tension by moving the compressor. It should not be possible to depress the belt by more than 5–10 mm (0.2–0.4 in).

Replace the receiver/dryer or drying agent, see page 59.

Add refrigerant to the system, see page 16.

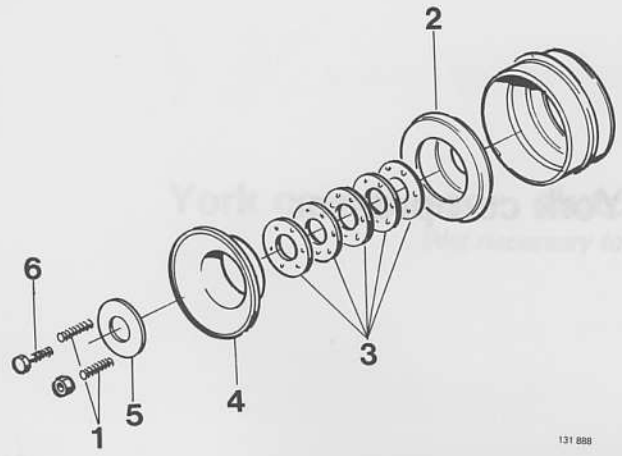

C8

Cars with power steering and twin drive belts

Fit the compressor.

C9

Fit:

1 – studs opposite each other
2 – inner pulley
3 – five washers
4 – compressor drive belt and outer pulley
5 – outer washer
6 – screws and nuts.

Note! The crankshaft should be rotated whilst tightening the pulley bolts, and also when fitting the belt. (2–3 turns).

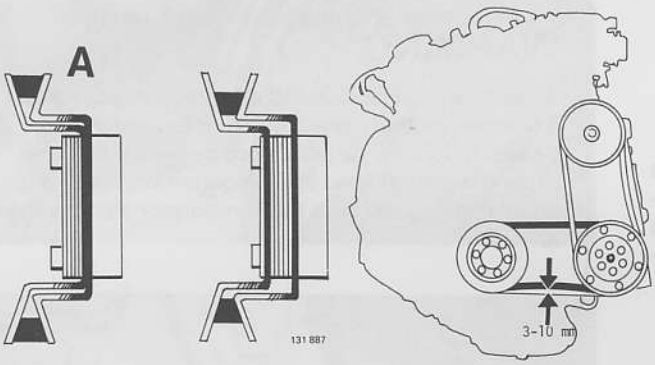

C10

Check belt tension: It should not be possible to depress the belt by more than 3–10 mm (0.12–0.4 in), (80–100 N=18–22 lbs).

Incorrect belt tension

Place washer (s) between the pulley halves to slacken the belts. Remove washer(s) to tighten the belts.

One washer alters the belt tension by about 5 mm (0-2 in).

Reconnect the refrigerant hoses. Use new O-rings, smeared with compressor oil.

Tightening torque 30 Nm (22 ft. lbs.)

Replace the receiver/dryer or drying agent. See page 58.

Add refrigerant to the system, see page 16.

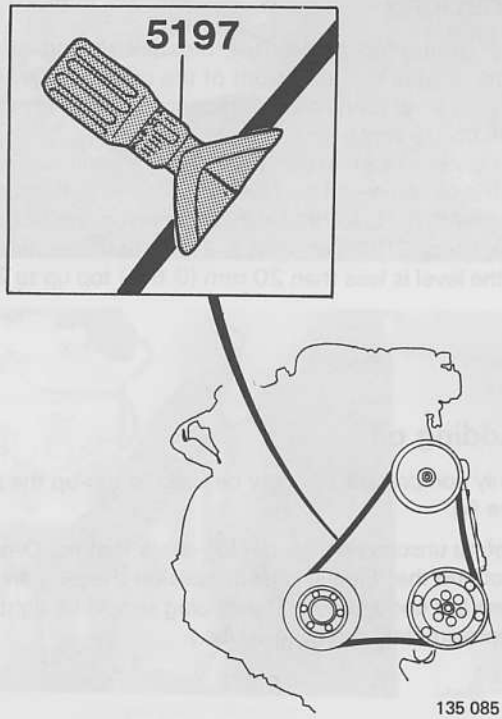

C11

Cars with power steering and one drive belt

Fit the compressor.

C12

Fit drive belt

Fit the belt over the crankshaft, compressor and power pump.

Tighten the belt by moving the power pump.

Check the belt tension as follows:

Attach tool **5197** to the belt between the crankshaft pulley and power pump.

The belt tension should be 17–18 units.

Reconnect the refrigerant hoses. Use new O-rings, smeared with compressor oil.

Tightening torque 30 Nm (22 ft. lbs.).

Replace the receiver/dryer or drying agent. See page 58.

Add refrigerant to the system, see page 16.

Oil level check – York compressor

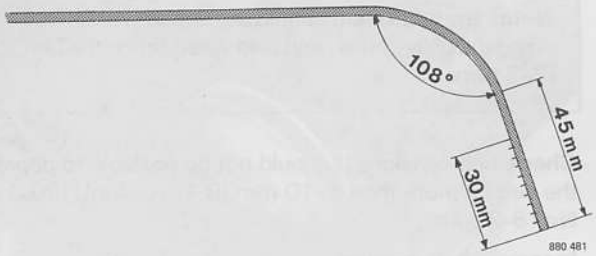

A dipstick can be made to measure the level of oil in the compressor. The dipstick can be shaped from a 3 mm diameter brass wire, and graduated with 10×3 mm marks as shown above. Each division corresponds to approximately 0.03 dm^3/(0.06 US pint).

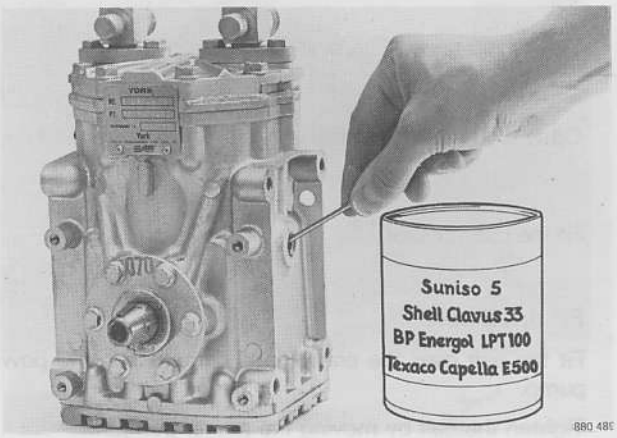

C13

Normally it is not necessary to check the oil level on installed compressors, but new or reconditioned units must be checked before installation and refrigerant is added. New compressors are charged with oil during manufacture.

WARNING

If the oil level in an installed compressor is checked it is important that the refrigerant is drained from the system before the oil plug is unscrewed. If this precaution is not followed the refrigerant will spray out of hole, taking the oil in the compressor along with it.

C14

Checking

The graduated part of the dipstick should be held at right angles to the bottom of the compressor. The correct oil level for new compressors is 28–29 mm (0.3 dm^3 = 0.06 US pint).
On installed compressors which have been run, so some of the oil will have been circulated in the system and consequently the level of oil in the compressor will be considerably lower (20–25 mm = 0.8–1.0 in) than specified above. If the level is less than 20 mm (0.8 in) top up to 20 mm.

C15

Adding oil

Only compressor oils may be used to top-up the system, see fig.

Before unscrewing the oil plug check that the O-ring is intact and that the sealing surfaces on the plug and crankcase are undamaged. The oil plug should be tightened to approximately **5 Nm** (4 ft. lbs.).

York compressor, clutch replacement (on car)

(Not necessary to drain refrigerant)

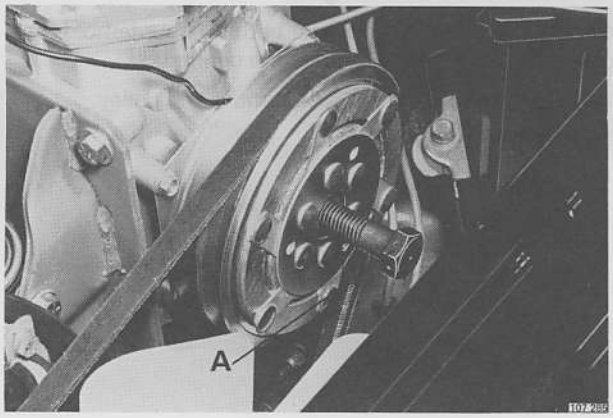

C16

Removing

Lock clutch and remove pulley centre bolt

Turn on the ignition to engage the electromagnetic clutch and counterhold the pulley with the drive belt. Remove the bolt and free the pulley from the shaft by screwing in a 5/8" UNC (A) bolt in the centre.

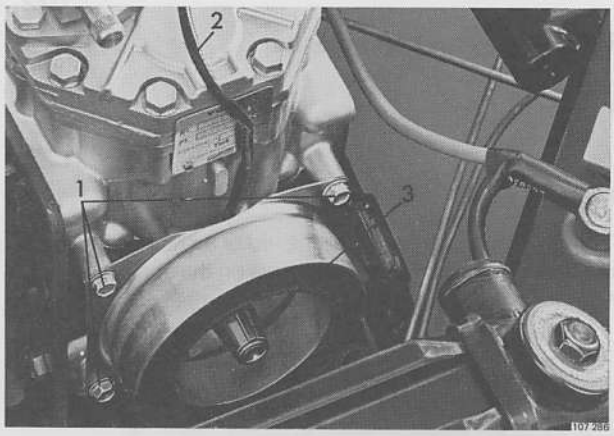

C17

Remove magnet

Disconnect lead (2).

Remove:

- four bolts (1).
- magnet (3).

C18

Fitting

Fit the magnet with the lead turned upward, and connect the cable. Make sure that the key is located correctly in the groove. Attach the pulley.

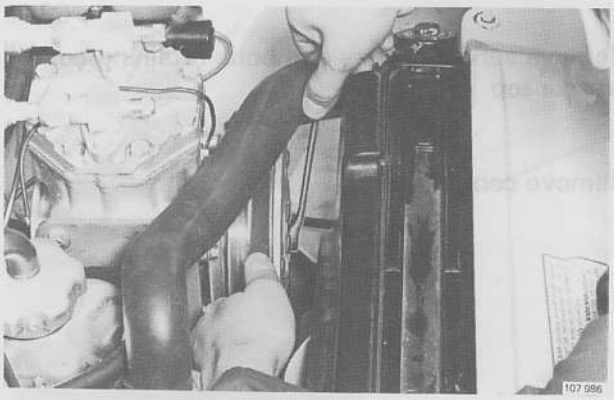

C19

Fit centre bolt

Turn on the ignition and counterhold the pulley with the drive belt when tightening the bolt.

Tightening torque 25–30 Nm (18–30 ft. lbs.)

Turn the pulley and make sure that it does not contact the magnet.

C20

Fit belt

See page 24 for B20 engines, and page 25 for B21.

Disassembling York compressor

(Off car)

Note! The valve plate is only available as a complete unit including valves, and can be replaced without removing the compressor from the vehicle. See operations C24–25, C38. It is however necessary to drain the refrigerant from the system, see page 15.

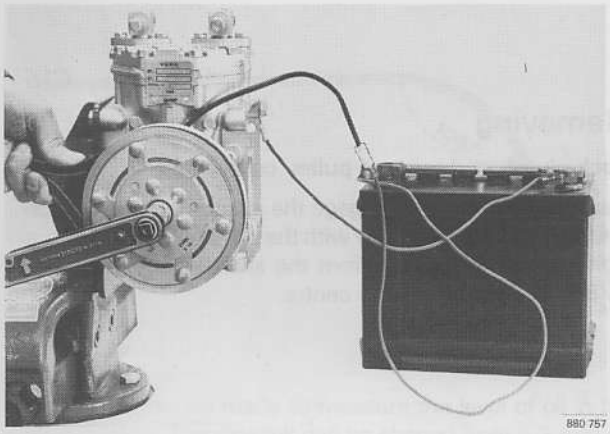

880 757

C21

Remove clutch and magnet

Lock the clutch by connecting a battery. Counterhold the pulley as illustrated and remove the centre bolt.

Screw in a 5/8" UNC bolt and remove the pulley.

Lift out the magnet.

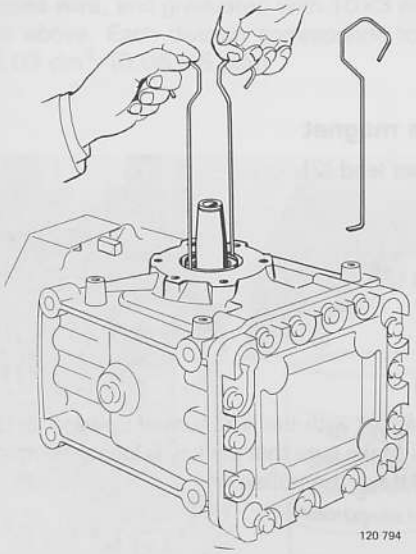

120 794

C22

Remove key and end washer

C23

Remove seal

Carefully lift out the seal with the aid of a steel wire. Make sure that there are no burrs or scores on the shaft, and that the inner sealing surfaces are clean.

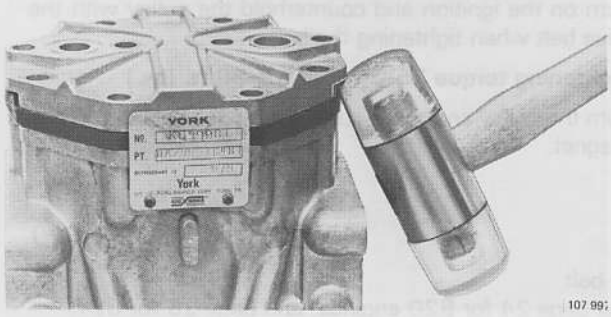

107 99?

C24

Remove service valves and bolts retaining compressor top

Remove compressor top

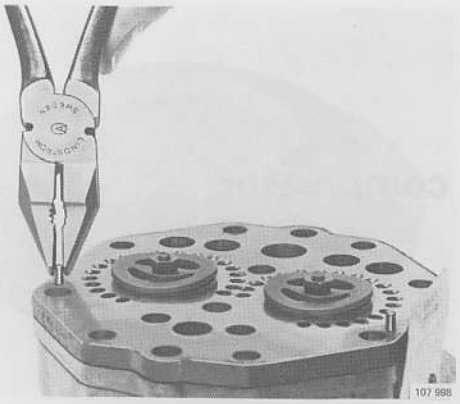

C25

Remove:

– guide pin
– valve plate (if necessary tap the sides lightly with a plastic mallet).

Carefully scrape off pieces of gasket (if any) from the crankcase and cover.

Valve plate replacement only, see page 31 operation C38.

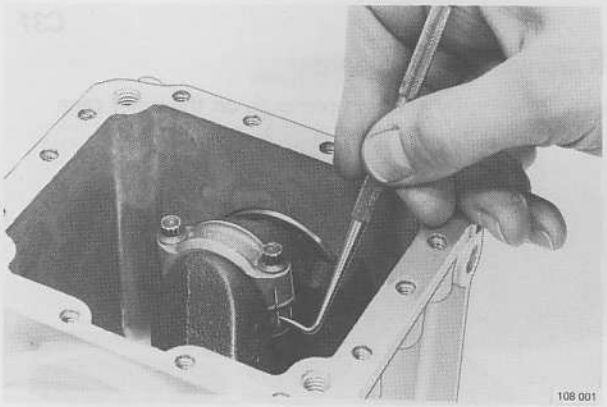

C26

Unscrew and remove bottom cover and clean crankcase and cover mating surfaces.

C27

Identify con rods and caps

C28

Remove con rod bolts, lift off cap and press out con rod and piston through cylinder.

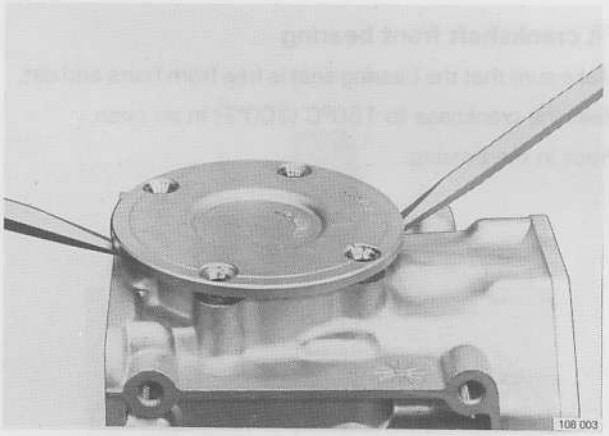

C29

Remove bearing cover plate

Clean and dry the crankcase and shaft to remove all traces of oil.

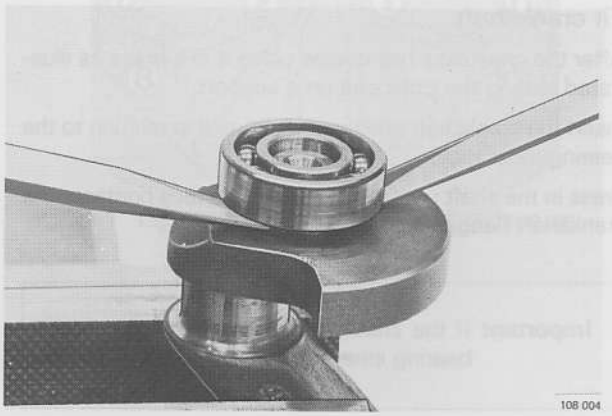

C30

Remove crankshaft bearing

Heat the crankcase to 150°C (300°F) in an oven.
(This makes it easier to remove the crankshaft and bearing.)

If the crankshaft is undamaged, and only the bearing is to be replaced, clamp the centre section of the shaft in a vice and lever off the bearing with two screwdrivers.

Assembling York compressor

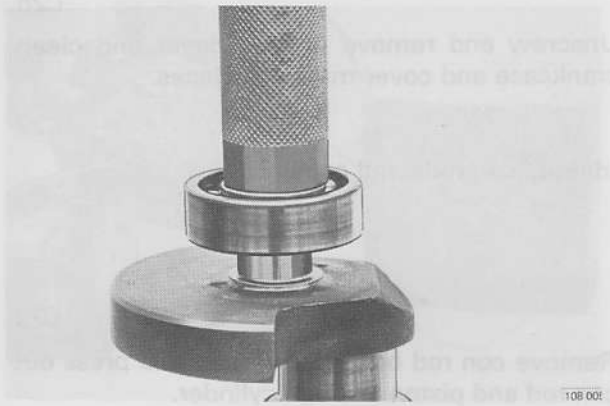

C31

Fit crankshaft rear bearing

Fit the bearing by exerting pressure on the inner race.

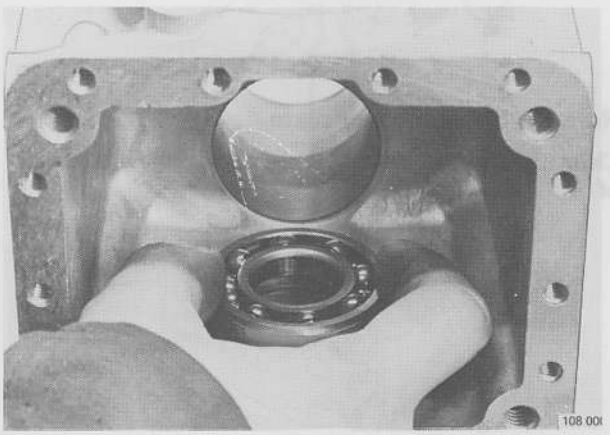

C32

Fit crankshaft front bearing

Make sure that the bearing seat is free from burrs and dirt.

Heat the crankcase to 150°C (300°F) in an oven.

Press in the bearing.

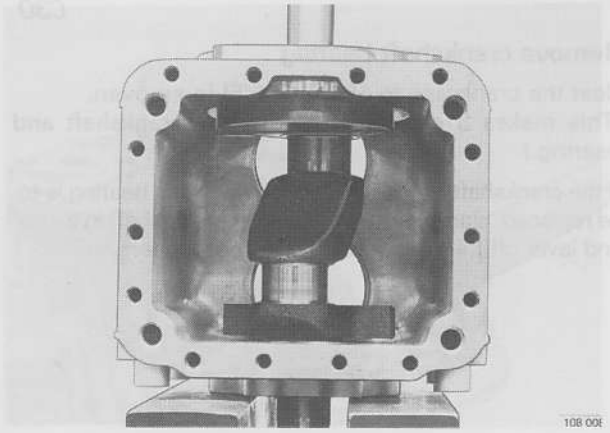

C33

Fit crankshaft

After the crankcase has cooled place it in a press as illustrated resting the front end on a support.

Insert the crankshaft and carefully align it in relation to the bearing inner race.

Press in the shaft until the bearing inner race contacts the crankshaft flange.

Important If the crankshaft does not contact the bearing inner race, damage will result.

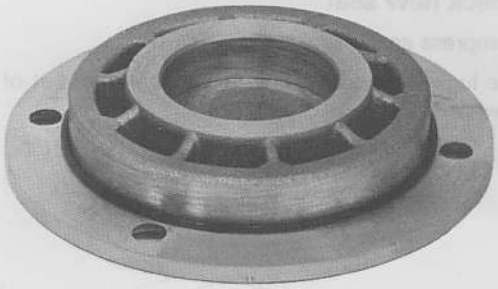

108 009

C34

Fit new rubber seal to rear cover plate

C35

Lightly press on cover plate and tighten all screws

Tighten to a torque of **20 Nm** (15 ft. lbs.).

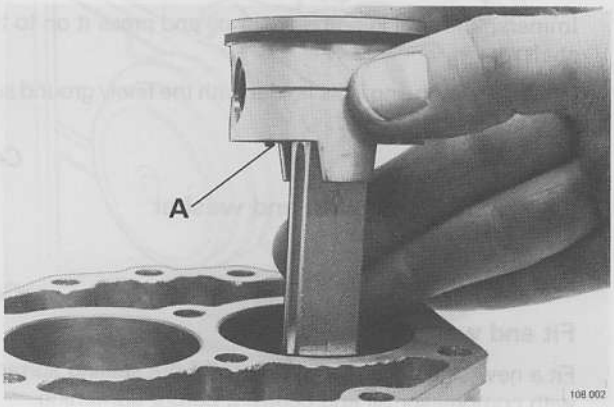

108 002

C36

Fit pistons and con rods

> **Note!** The lock pin (A) in the gudgeon pin must point towards the centre of the compressor.

Assemble con rods and caps and tighten to a torque of 20 Nm (15 ft. lbs.).

Check for smooth operation by turning the shaft a few turns.

C37

Fit bottom cover with new gasket and tighten crosswise to 20–30 Nm (15–30 ft. lbs.)

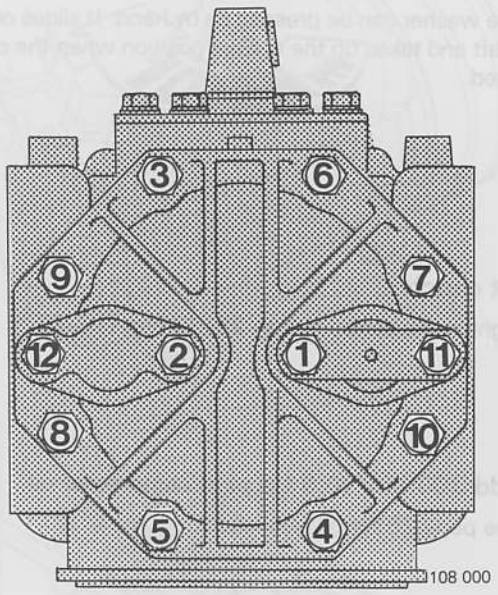

108 000

C38

Fit valve cover and top cover

Smear compressor oil on to the crankcase, valve cover and top cover sealing surfaces.

Fit the crankcase guide pins.

Place a new gasket on the crankcase and make sure when fitting the valve plate that the nuts point upwards.

Place a new gasket between the valve cover and top cover.

Smear the sealing surfaces of the service valves with compressor oil and place new seals in the top cover.

Secure the valves with the four long bolts and tighten the remaining bolts in the order indicated adjacent to a torque of **20–30 Nm** (15–30 ft. lbs.).

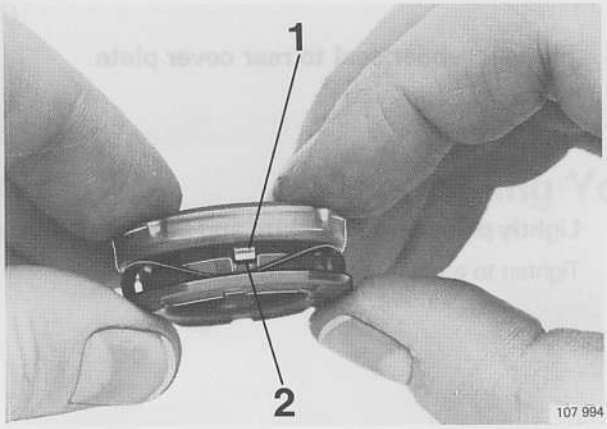

C39

Check new seal

Compress seal a few times.

The lugs (1) must be able to move in and out of the recesses (2).

C40

Fit seal

Immerse the seal in compressor oil and press it on to the shaft.

Place the piston ring in its holder with the finely ground surface (A) facing upward.

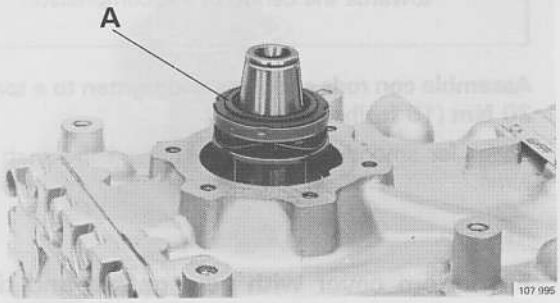

C41

Press down seal with end washer

C42

Fit end washer

Fit a new seal under the washer. Oil the sealing surfaces with compressor oil and centre it before tightening.

C43

Fit cover washer

The washer can be pressed on by hand. It slides on to the shaft and takes up the correct position when the clutch is fitted.

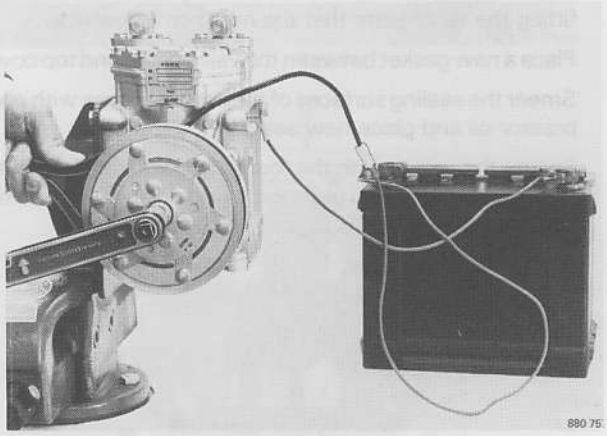

C44

Fit clutch

Tighten the centre bolt to **25–30 Nm** (18–22 ft. lbs.).

C45

Add 300 cm³ (0.6 US pint) compressor oil

See page 26 for oil level check.

D. Sankyo compressor SD 508, 510

Removing – fitting – belt adjustment

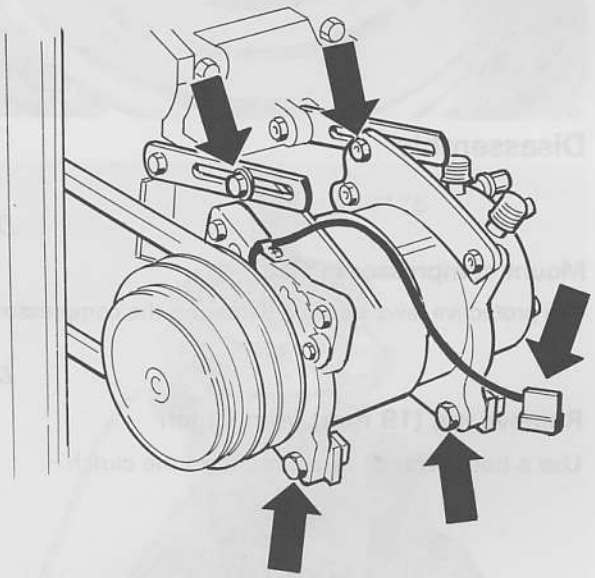

114 796

D1

Removing

Drain refrigerant, see page 15.

Disconnect from compressor:

– leads

– refrigerant hoses (plug ends immediately).

D2

Slacken the mounting bolts, arrowed.

D3

Lift off the drive belt, remove the mounting bolts and lift away the compressor.

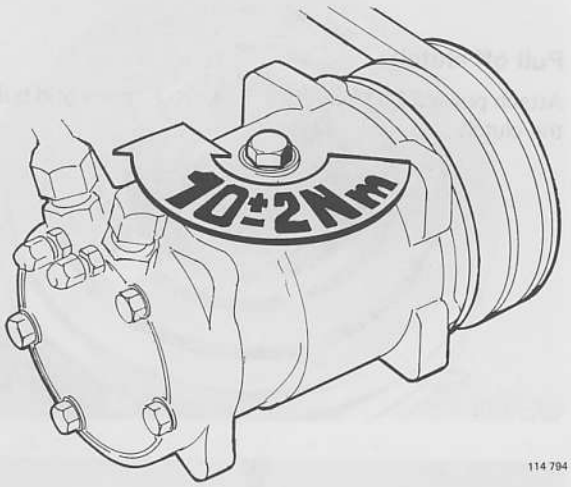

114 794

D4

Fitting – belt adjustment

If the compressor has been replaced or repaired the oil level must be checked.

Method:

Drain the old compressor oil into a measuring cylinder and note the amount.

Add the same amount of new oil to the compressor before installing it.

The amount of oil added must be more than 40 cm^3 (0.08 US pint).

Smear the plug O-ring with compressor oil and tighten the plug to a torque of **10±2 Nm (7.4±1.5 ft. lbs.)**.

If for instance a hose has burst and refrigerant has been lost very quickly, add 135 cm^3 oil to the compressor.

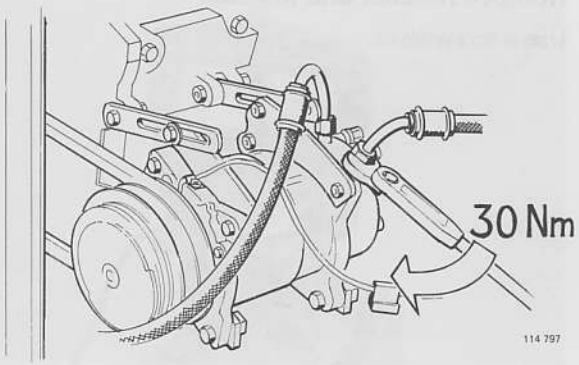

114 797

D5

Attach the compressor loosely. Adjust the belt tension and tighten the mounting bolts. It should not be possible to depress the belt by more than 5–10 mm (0.2–0.4 in).

Reconnect the lead.

Reconnect the refrigerant hoses. Use new O-rings, smeared with compressor oil.

Tightening torque **30 Nm** (22 ft. lbs.)

Replace receiver/dryer or drying agent, see page 58.

Fill refrigerant, see page 16.

Clutch replacement, Sankyo compressor SD 508, 510

Includes replacement of pulley, carbon seal, bearings (2x), magnet

Special tools: 1801, 2261, 5137, 5142, 9175

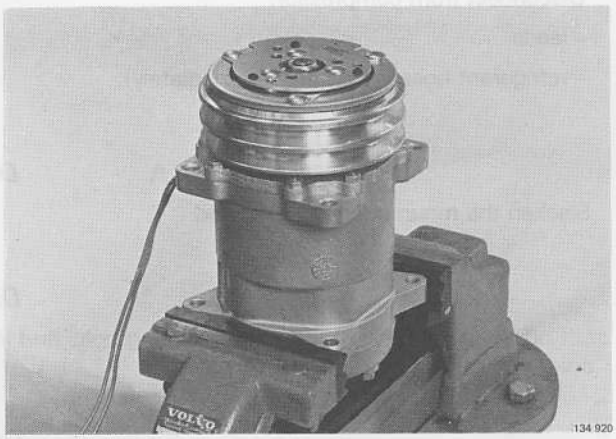

Disassembly

D6

Mount compressor in vice

Use protective jaws to avoid damaging the compressor.

D7

Remove nut (19 mm) from clutch

Use a hook wrench to counterhold the clutch.



D8

Pull off clutch

Attach puller **2261** with 3 × 1/4" × 1" bolts and pull off the clutch.

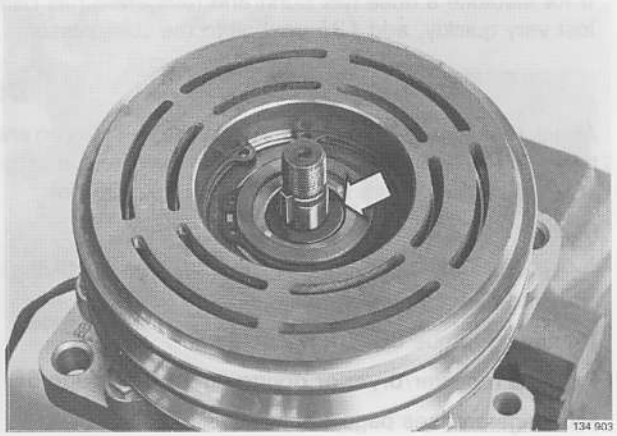

D9

Remove retainer and felt seal

Use a screwdriver.

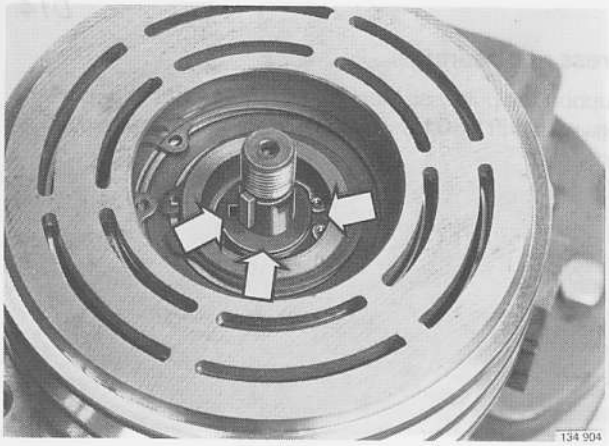

D10

Remove:

- key from shaft
- shims
- circlip and washer
- O-ring.

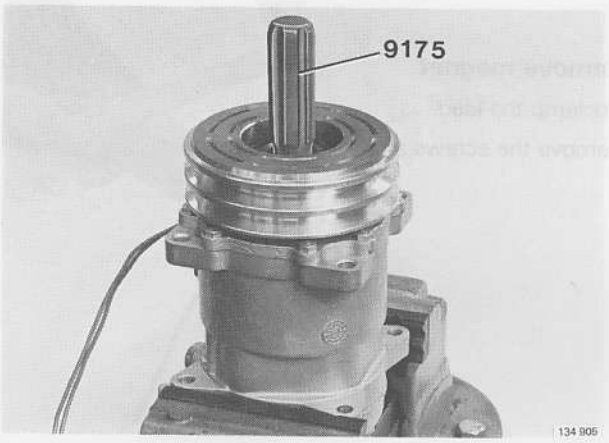

D11

Remove carbon seal from shaft

Use puller 9175.

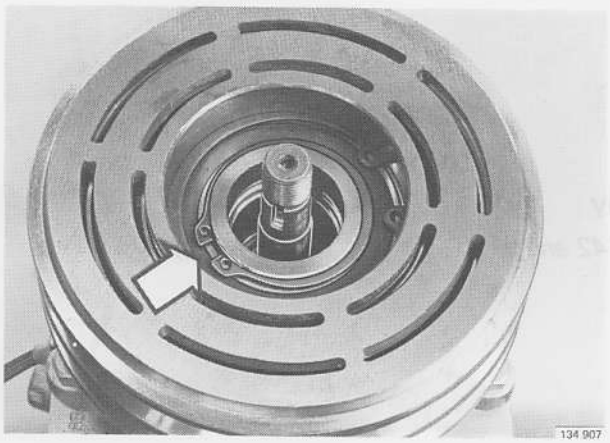

D12

Remove inner circlip



D13

Remove pulley

Use a universal puller.

Remove the circlip securing the bearing.

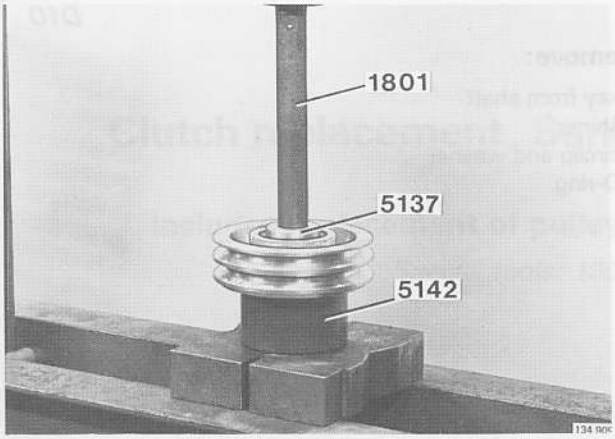

D14

Press out bearings

Support the pulley on block **5142**. Press out the two bearings with drift **1801** and **5137**. NOTE There are two bearings.

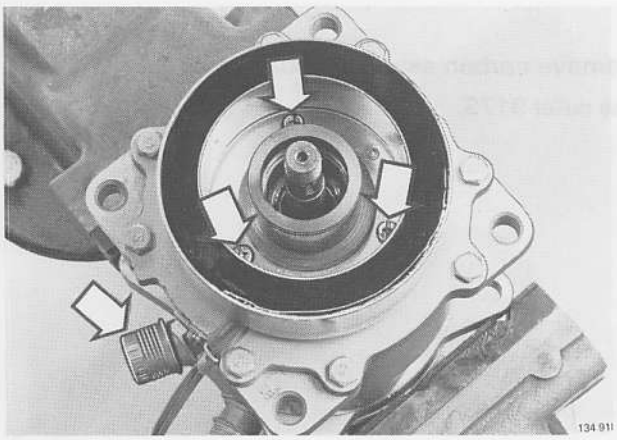

D15

Remove magnet

Unclamp the lead.

Remove the screws and lift out the magnet.

Assembly

Special tools: 5085, 5142 and 9175

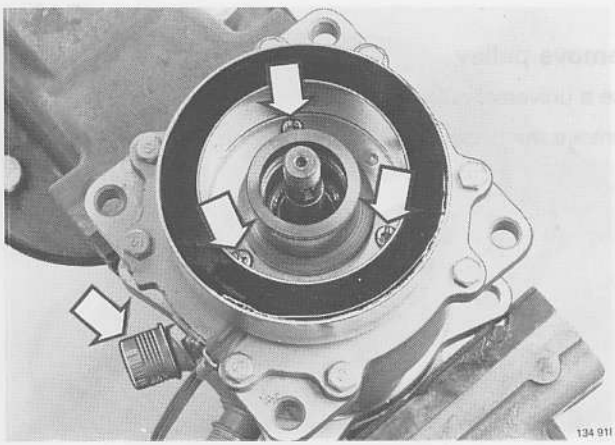

D16

Fit magnet

Secure the lead to the clamp.

Tighten the screws.

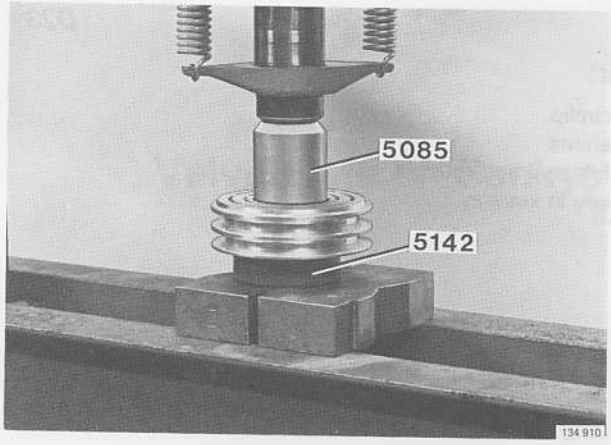

D17

Press in bearings

Use press tool **5085** and block **5142.**

Fit the bearings one at a time.

D 18

Fit circlip



D19

Attach pulley to compressor

Use block **5142.**

Carefully tap the pulley in to position with a plastic mallet.

D20

Fit inner circlip

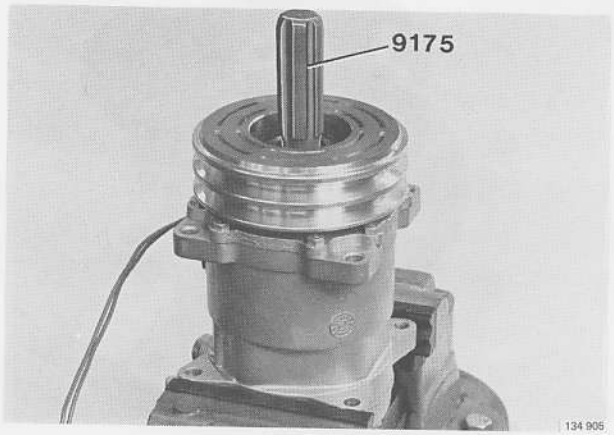

D21

Fit carbon seal

First attach the seal to tool **9175.**

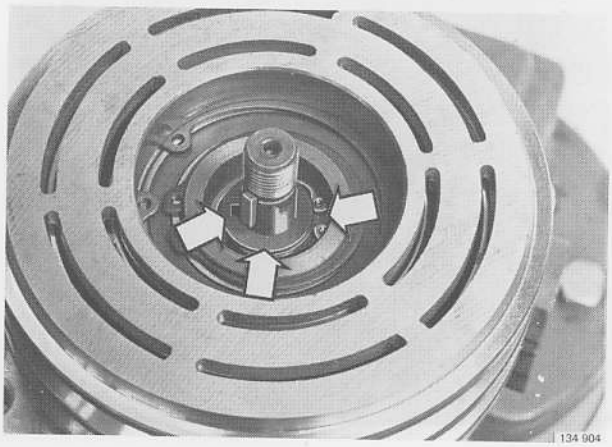

D22

Smear O-ring with compressor oil before placing in compressor

(Raised section of O-ring upward.)

D23

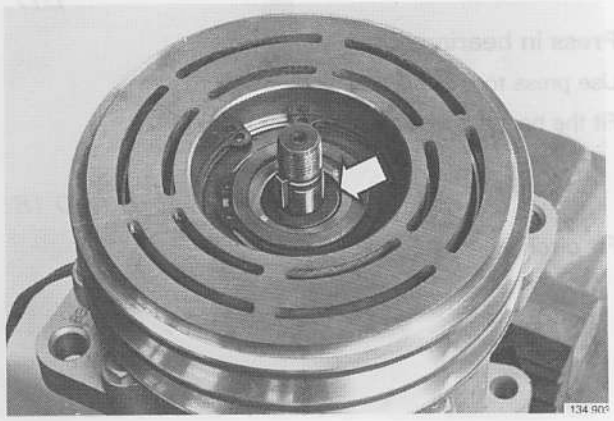

Fit:

- circlip
- shims
- felt seal and retainer
- key in keyway.

D24

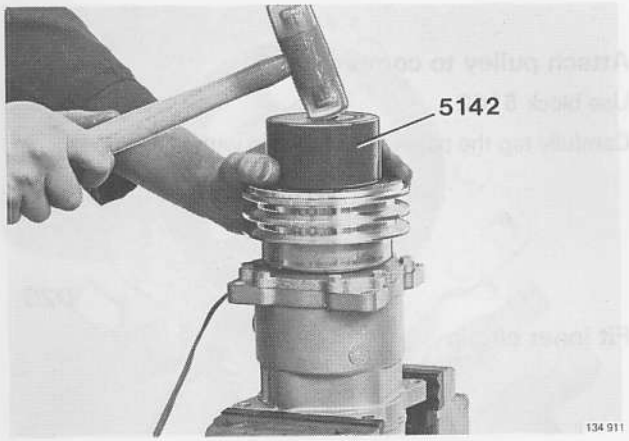

Fit clutch

Align the clutch to the keyway.

Carefully tap on the clutch with a plastic mallet until one or two of the threads are visible. Use block **5142.**

Fit nut

Tightening torque **38 Nm (28 ft. lbs.)**

Fit compressor, see page 33.

Valve plate on Sankyo compressor, replacement

(Off car)

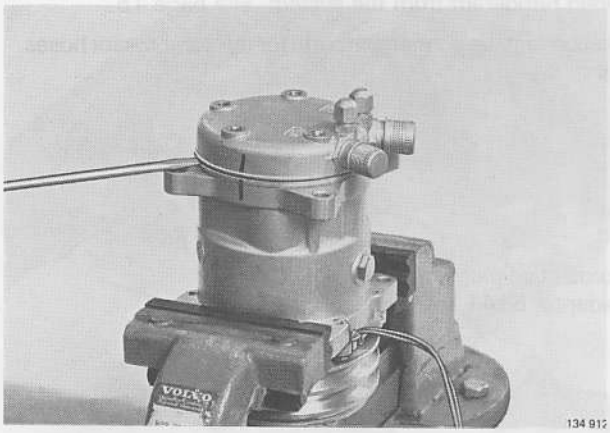

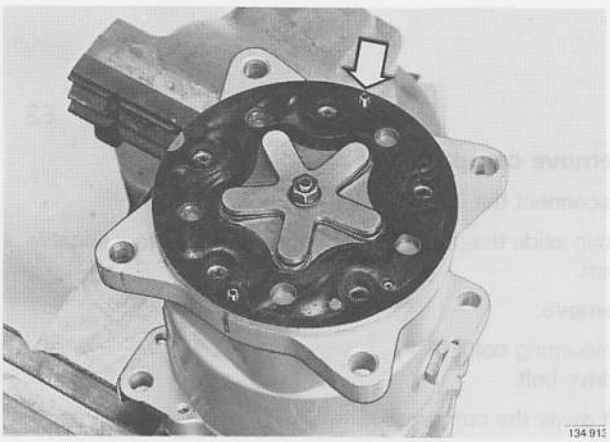

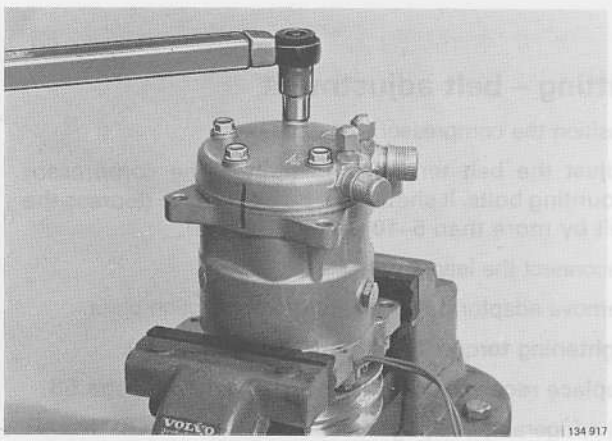

Removing

D25

Mount compressor in vice (valve cover up.)

Mark the position of the cover.

D26

Remove screws and cover

Carefully lever off the cover with a screwdriver.

D27

Free valve plate

Carefully lever off the valve plate without scoring the surface.

Clean the compressor body and valve plate.

Fitting

D28

Place new gasket and valve plate on body

Make sure that the guide pin fits in to the correct hole, otherwise the retaining screws will not fit properly.

D29

Place new gasket between valve plate and cover

Position the cover according to the indentification marks.

Tighten the bolts crosswise.

Tightening torque 15-2 Nm (!!±1.5 ft. lbs.).

NOTE If oil has been spilt during the repair, the oil plug should be removed and the compressor oil drained into a measuring cylinder. Correct amount = 135 cm^3. (0.3 US pint).

Return the oil and tighten the oil plug to **10 Nm (7.4 ft. lbs.).**

E. Delco compressor

Removing – fitting – belt adjustment

Special tool 5141

It is not necessary to discharge refrigerant from the system if the compressor is only moved to one side to obtain access to the engine valves e.t.c. In such a case follow E2 and hang the compressor from the bonnet hinge.

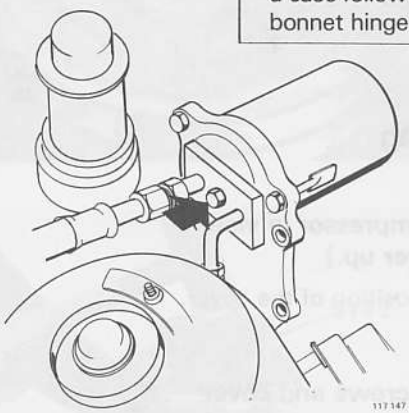

E1

Removing

Drain refrigerant from the system, see page 15.

Disconnect the connection plate for the compressor hoses.

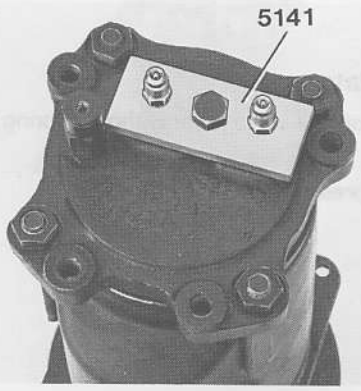

Fit:

- protective plugs on plate
- adaptor **5141** to compressor.

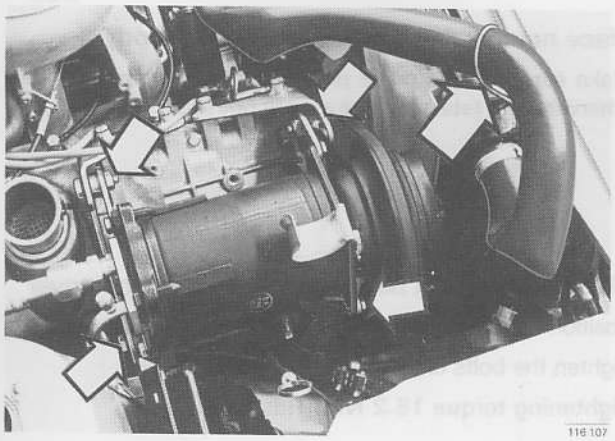

E2

Remove compressor

Disconnect the lead.

Move aside the upper radiator hose and tie it to a suitable point.

Remove:

- mounting bolts (4 ×)
- drive belt.

Lift away the compressor.

E3

Fitting – belt adjustment

Position the compressor and drive belt.

Adjust the belt tension and tighten the compressor mounting bolts. It should not be possible to depress the belt by more than **5–10 mm** (0.2–0.4 in).

Reconnect the lead.

Remove adaptor 5141 and fit the connection plate.

Tightening torque 14–34 Nm (10–25 ft. lbs.).

Replace receiver/dryer or drying agent, see page 58.

Fill refrigerant, see page 16.

Clutch replacement, Delco compressor

Includes replacement of pulley, bearing, magnet

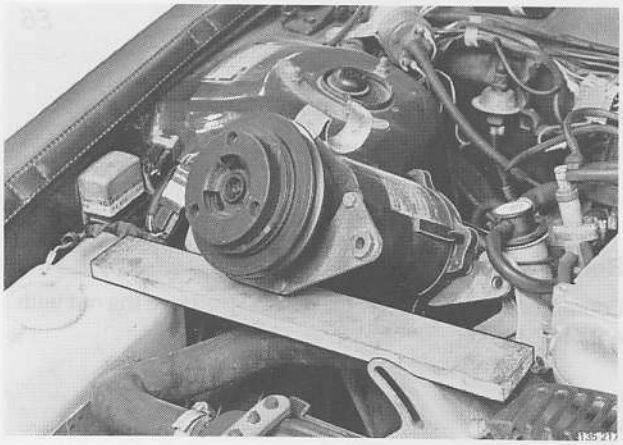

E4

Obtain access to clutch

Disconnect the negative lead from the battery.

Detach the compressor from the mounting brackets and lift off the drive belt.

Bend the upper radiator hose under the compressor and place a piece of wood above the hose to support the compressor.

E5

For removal of components, see pages **42–43, E7–13.**

For fitting of solenoid, see page **48, E36–39.**

For fitting the remaining components, see pages **49–50, E40–45.**

Disassembling Delco compressor

Special tools: 1801, 5132, 5133, 5134, 5135, 5137, 5139, 5140, 5142
(Off car)

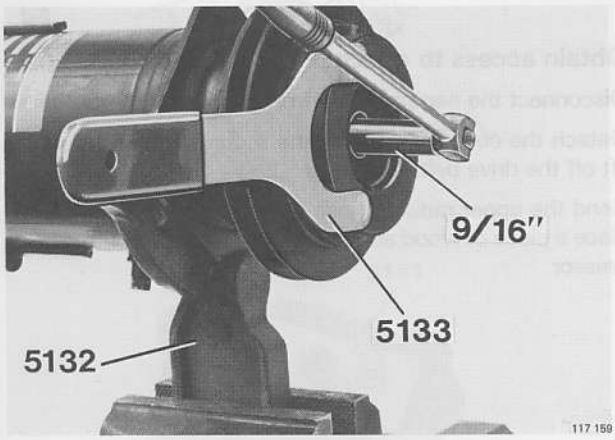

E6

Mount fixture 5132 in vice

Support the compressor in the fixture.

E7

Remove clutch nut

Counterhold the clutch with **5133** and remove the nut with a 9/16" socket.

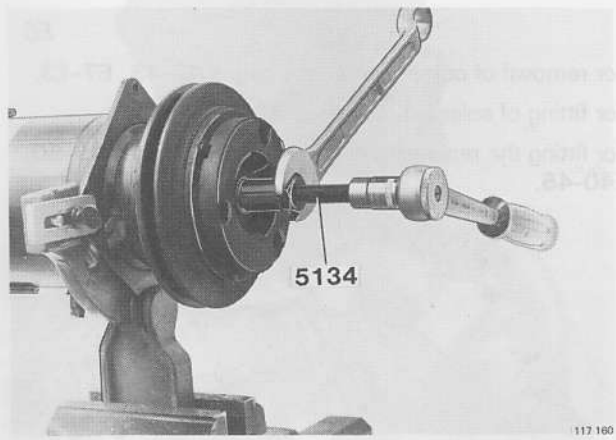

E8

Remove:

- circlip
- washer.

E9

Withdraw clutch

Use puller **5134**.

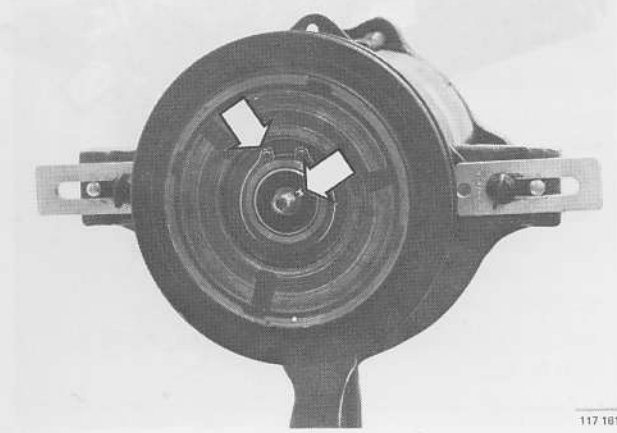

E10

Remove:

- key
- circlip
- sleeve (lever out with screwdriver)
- felt seal.

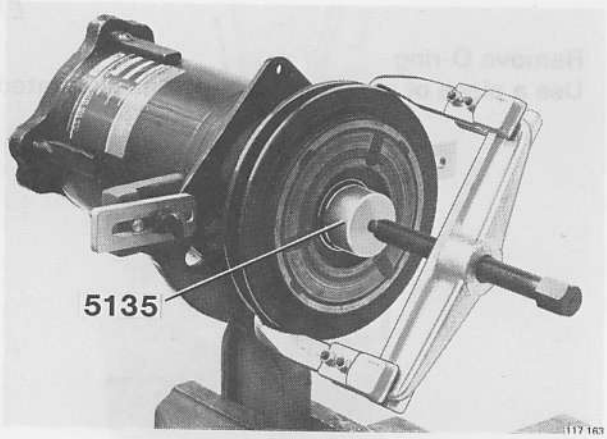

E11

Pull off pulley

Use a suitable puller.

Use tool **5135** to support the centre spindle of the puller.

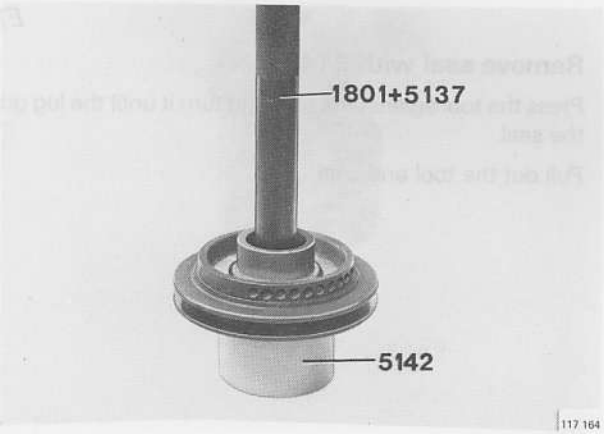

E12

Remove pulley circlip and drive out bearing

Use drift **5137** and handle **1801**.

Place support **5142** beneath the pulley.

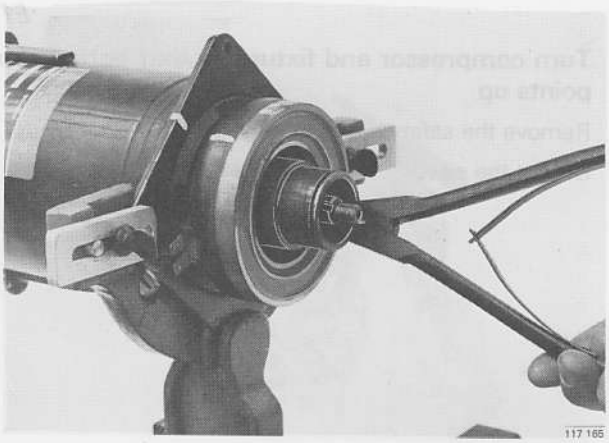

E13

Remove magnet

Identify the position of the magnet.

Remove:

- circlip
- magnet.

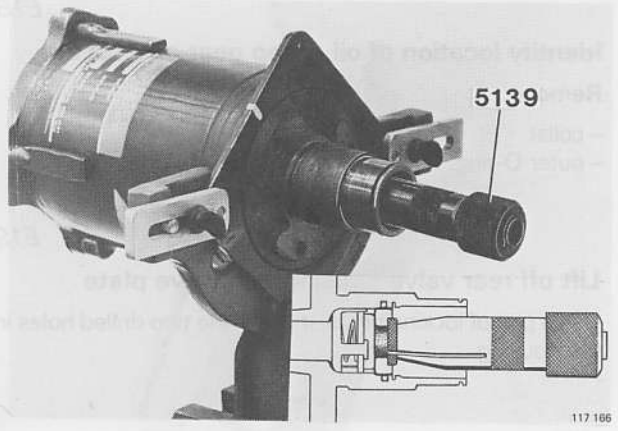

E14

Remove circlip and ceramic sleeve

Remove the circlip and front collar.

Withdraw the sleeve with puller **5139**.

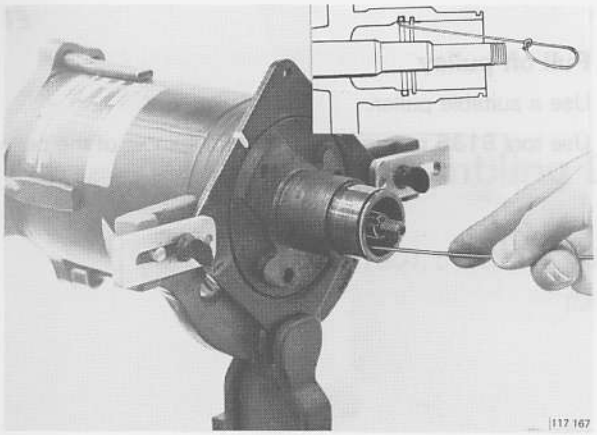

E15

Remove O-ring
Use a piece of steel wire, shaped as illustrated.

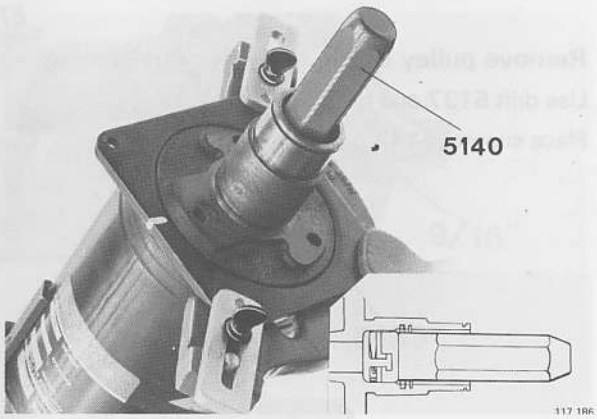

E16

Remove seal with 5140

Press the tool against the seal and turn it until the lug grips the seal.

Pull out the tool and seal.

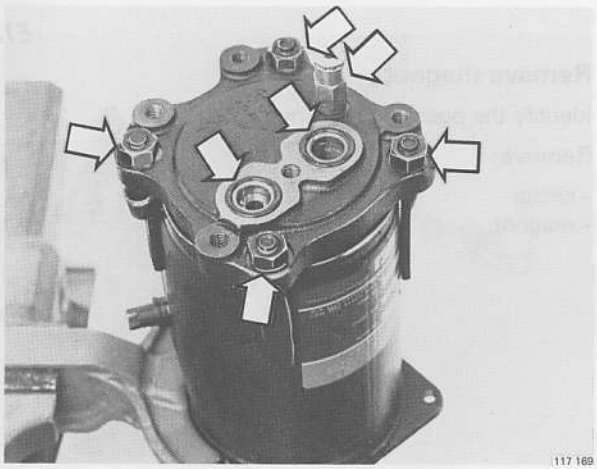

E17

Turn compressor and fixture so that bottom end points up

Remove the safety valve, O-rings and rear cover.

Lift out the sieve.

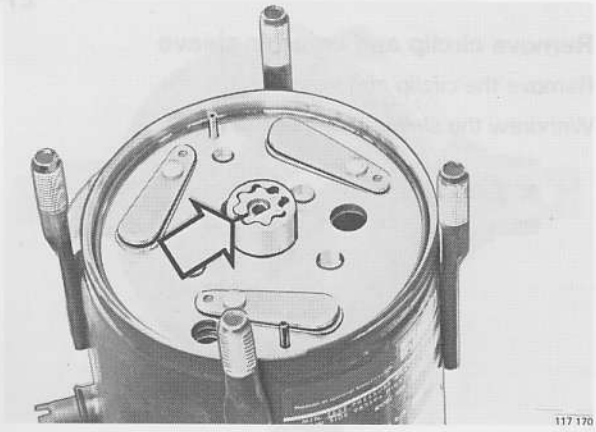

E18

Identify location of oil pump gear and collar

Remove:

– collar
– outer O-ring.

E19

Lift off rear valve housing and valve plate

Use a pair of locking pliers and grip the two drilled holes in the housing.

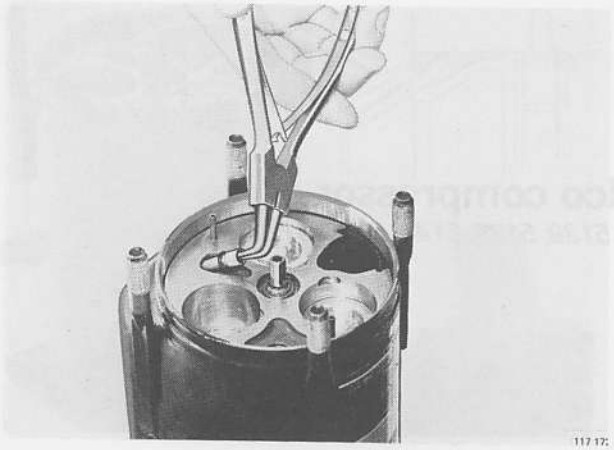

E20

Remove oil pump suction pipe and O-ring



E21

Detach compressor from fixture

Support compressor on 5142, front end up

E22

Lift off outer housing from cylinder unit



E23

Pull out front end O-ring

E24

Lift off front section

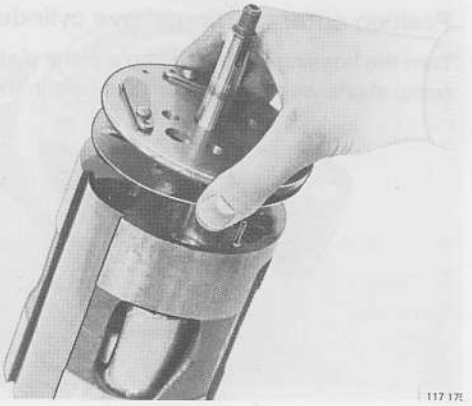

E25

Remove front valve housing and valve plate from cylinder unit

E26

Clean and check all parts

E27

Replace seals and worn parts

Note The cylinder unit (incl. shaft and pistons) is available as a complete spare part.

Assembling Delco compressor

Special tools: 1801, 5132, 5133, 5138, 5139, 5140, 5142, 5152

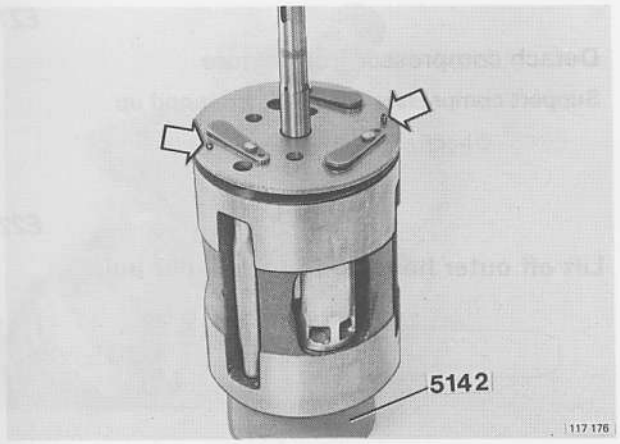

E28

Support cylinder unit on 5142 and fit front valve plate and valve housing

Note The location of the two guide pins.

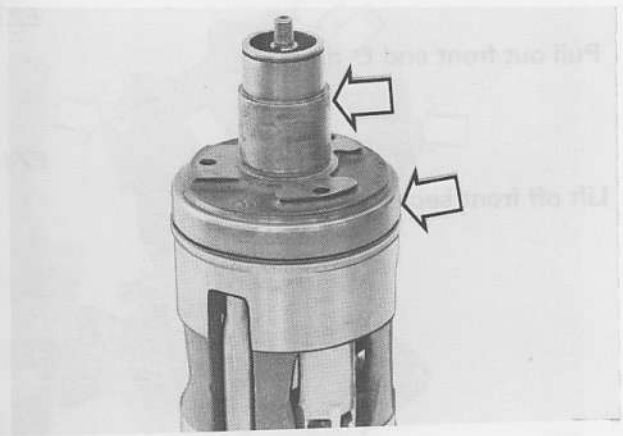

E29

Fit front section and O-ring on valve housing

Smear the O-ring with compressor oil.



E30

Position outer housing above cylinder unit

Turn the housing so that the hole in the plate above the oil sump aligns with the suction pipe hole in the cylinder unit.

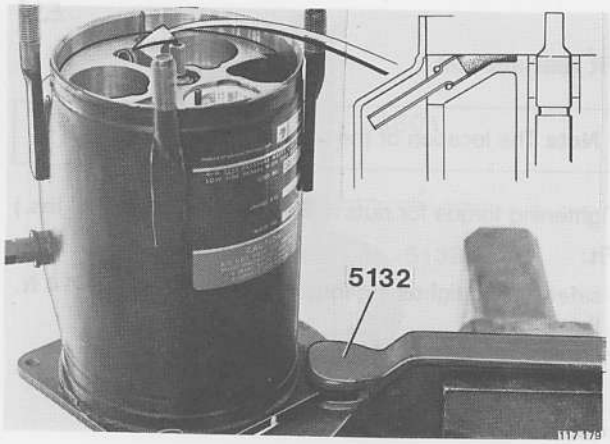

E31

Mount compressor in fixtures 5132 as illustrated and fit suction pipe and O-ring

The cylinder unit should then be turned so that the suction pipe is centred in the hole in the oil sump plate.

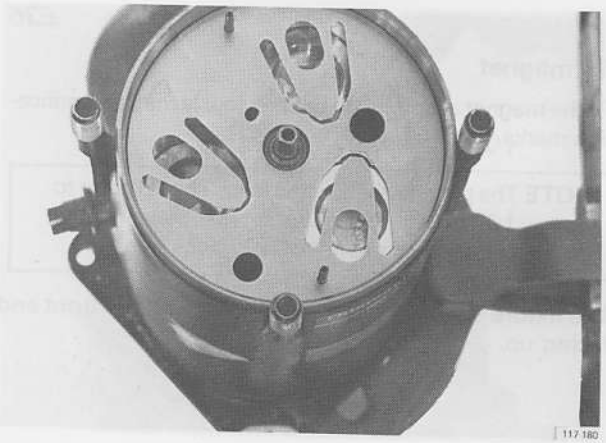

E32

Fit rear valve plate

Align the plate with the cylinder unit.

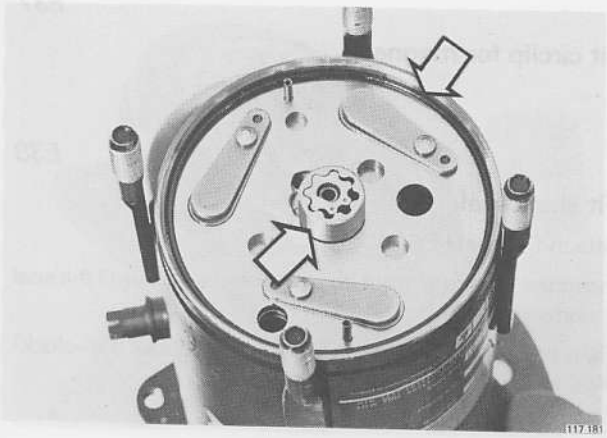

E33

Fit:

- valve housing
- O-ring
- oil pump (align identification marks).

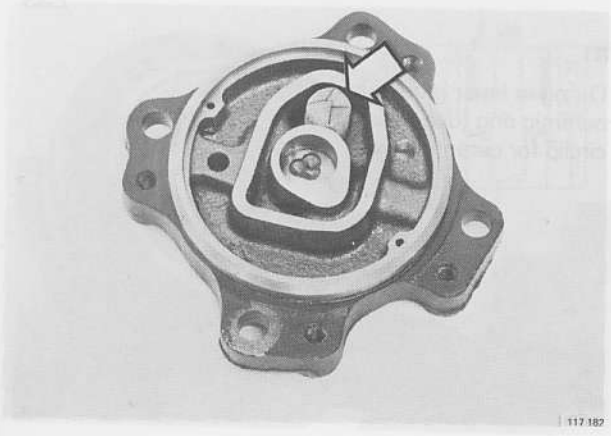

E34

Fit sieve in rear section

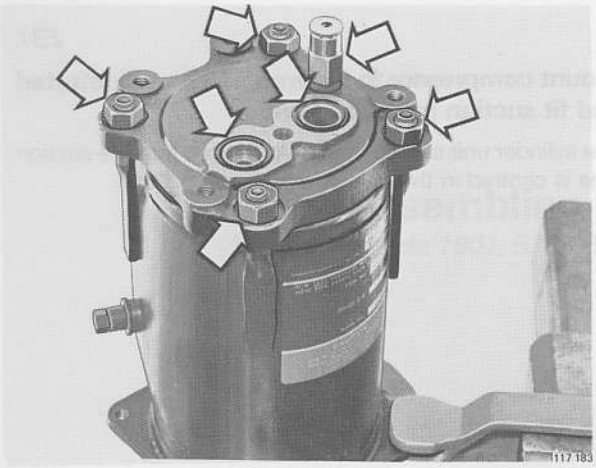

E35

Fit rear section

Note The location of the two guide pins.

Tightening torque for nuts = **26–34 Nm (19–25 ft. lbs.)**

Fit:

- safety valve, tightening torque = **14–19 Nm (10–14 ft. lbs.)**
- O-rings for hose connections.

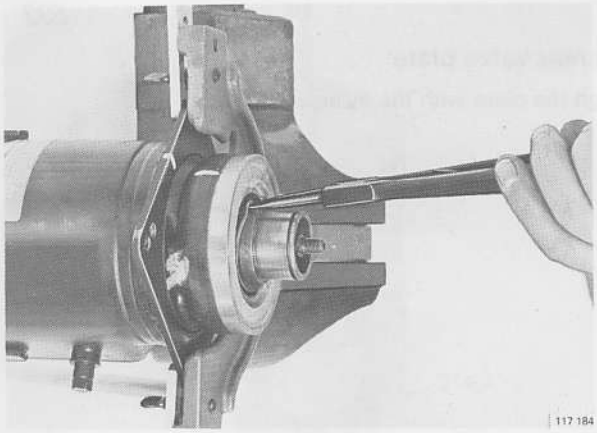

E36

Fit magnet

Fit the magnet according to the previously made identification marks.

NOTE The plug for the electric leads should point to 10 o'clock when the service plate on the compressor points to 12 o'clock.

The fixture should be held in the vice with the front end facing up.

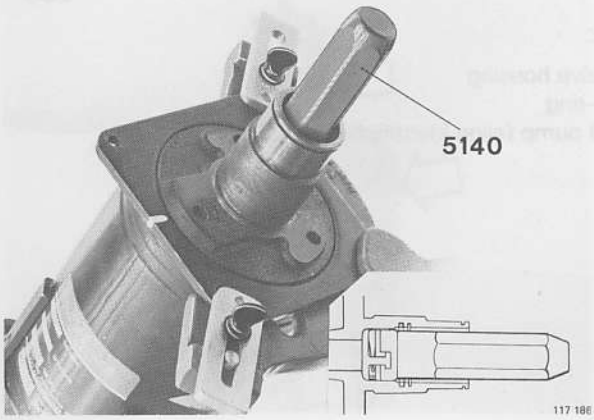

E37

Fit circlip for magnet

E38

Fit shaft seal

Attach the seal to **5140**.

Insert the tool in the front end collar and turn it until the seal is correctly fitted.

Then press down the spring and turn the tool anti-clockwise to release the seal from the tool.

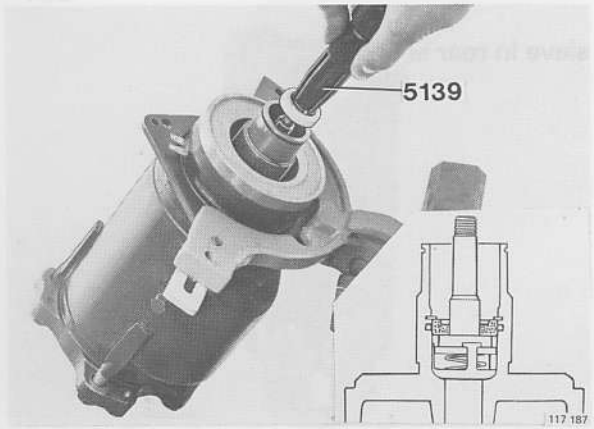

E39

Fit:

- O-ring in inner groove in collar
- ceramic ring (use puller **5139**)
- circlip for ceramic ring.

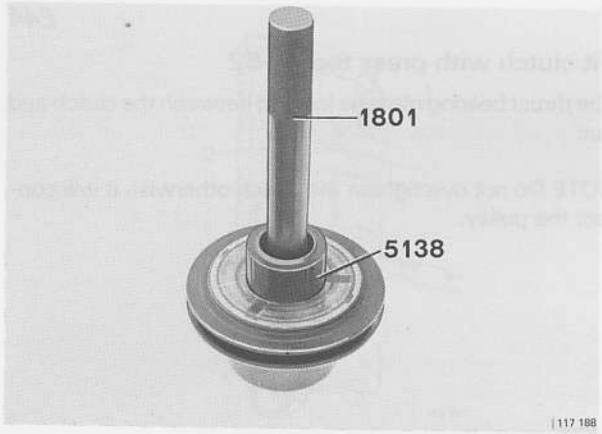

E40

Fit bearing and circlip on pulley

Use drift **5138** and handle **1801**.

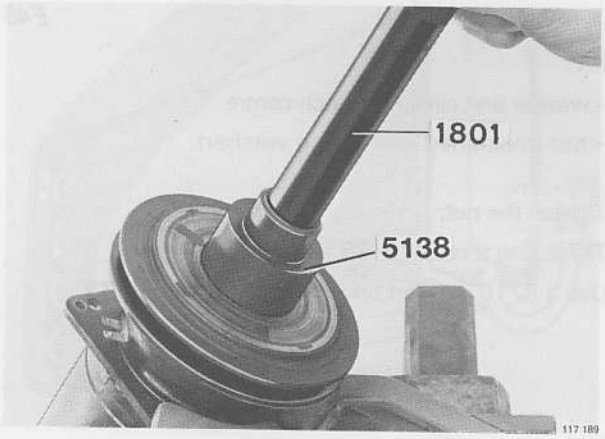

E41

Fit pulley

Use drift **5138** and handle **1801**.

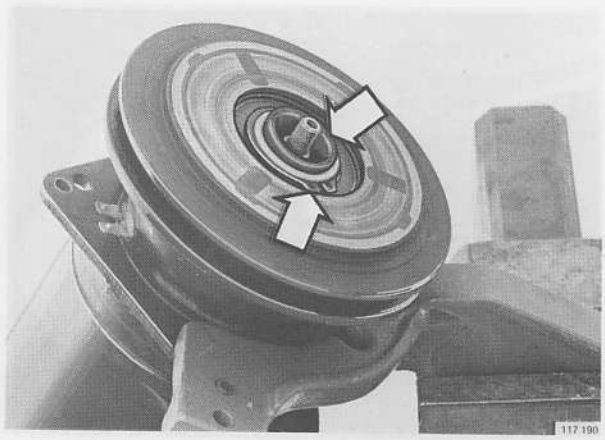

E42

Fit:

- pulley circlip
- felt seal.

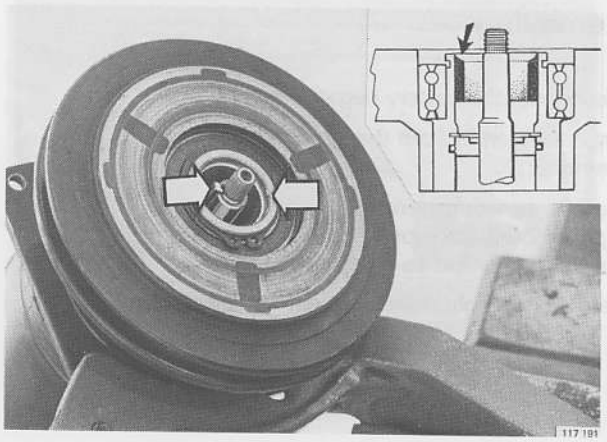

E43

Fit:

- new sleeve for felt seal
- key in shaft keyway.



E44

Fit clutch with press tool 5152

The thrust bearing must be located between the clutch and nut.

NOTE Do not overtighten the clutch otherwise it will contact the pulley.

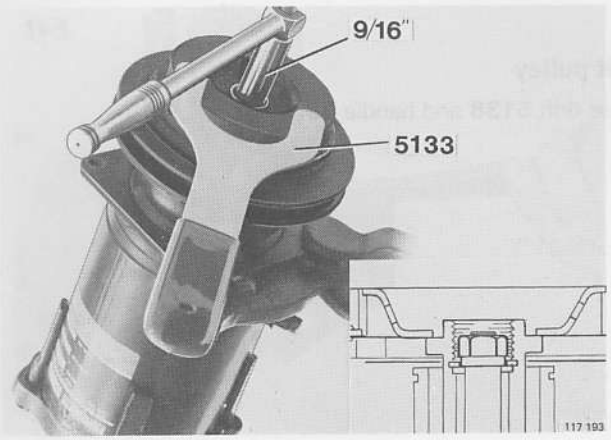

E45

Fit:

– washer and circlip in clutch centre

– nut (machined end facing washer).

Tighten the nut:

Tightening torque **19–35 (14–26 ft. lbs.)**

Use a 9/16" socket and counterhold with **5133.**

F. Evaporator, replacement

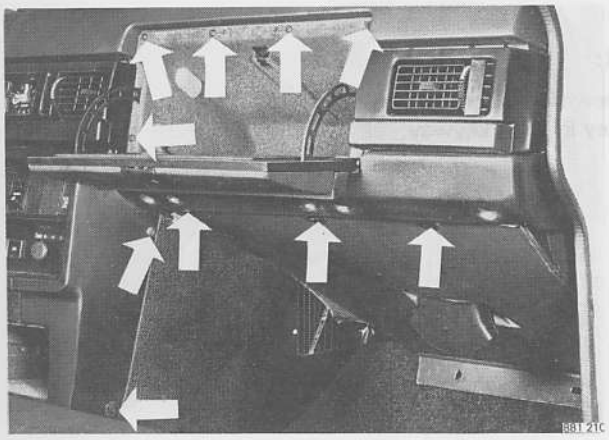

Removing

F1

Disconnect the battery negative lead.

Drain refrigerant from the system, see page 15.

Remove:

– glove compartment
– panel beneath glove compartment
– side panel next to heater.

Remove the right defroster vent and air duct.

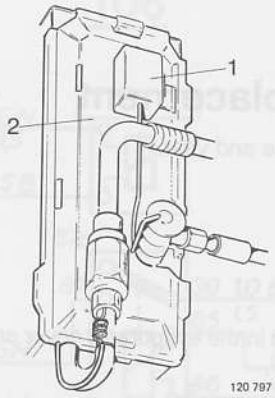

120 797

F2

Remove thermostat from cover

(Applies to 240 1975–1978)

Note that the position of the thermostat (1) can vary and that the capillary tube on 1979– models is mounted on the evaporator pipe.

Remove:

- expansion valve
- insulation
- cover (2).

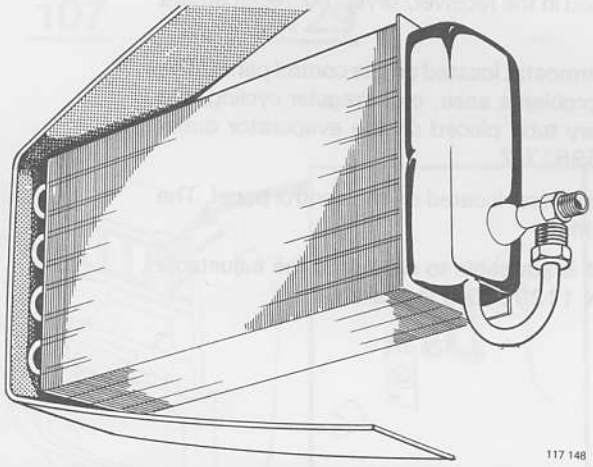
117 148

F3

Unscrew connections and carefully pull out evaporator

Fitting

F4

Fit:

- new evaporator seal
- evaporator
- cover.



F5

Fit (as applicable):

- expansion valve
- capillary tube
- thermostat.

F6

Connect refrigerant hoses

Use new O-rings, smeared with compressor oil.

Tightening torque **30 Nm (22 ft. lbs.)**

Replace receiver/dryer or drying agent, see page 58.

Fill system with refrigerant and leak test, see page 16.

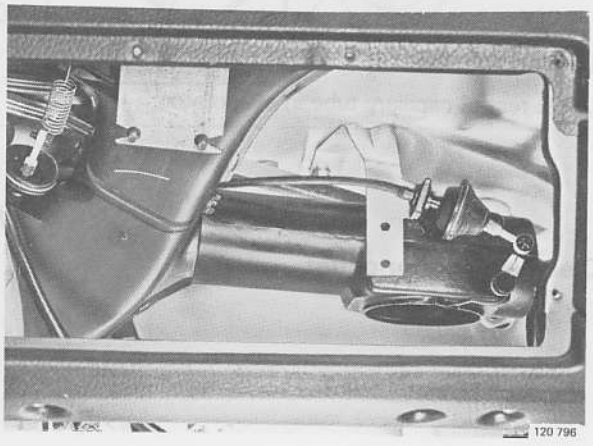
120 796

F7

Insulate hoses and connections

NOTE The expansion valve must not be insulated.

F8

Fit:

- defroster vent
- air duct
- glove compartment
- panels.

Evaporator thermostat, replacement

Thermostat location varies with model type and year.

The following variations occur:

240 1975–1978, 260 1978: The thermostat is located in the evaporator cover and the capillary tube (heat sensor) is inserted in the evaporator.

260 1975–1977: No thermostat fitted. The temperature of the refrigerant is regulated instead by a suction discharge valve, incorporated in the receiver/dryer. For replacement see page 56, operation H1–5.

240, 260 1979 early types: Adjustable thermostat located on the control panel. The capillary tube is inserted in the evaporator. If problems arise, e.g. irregular cycling, the thermostat should be replaced and the capillary tube placed on the evaporator outlet (same as for late types). Thermostat P/N 1259617-7.

240, 260 1979 late types: Adjustable thermostat located on the control panel. The capillary tube is mounted on the evaporator outlet.

On replacing thermostats on old type models it is advisable to change to the adjustable type, see instructions below. A special kit P/N 1129090-5 is available.

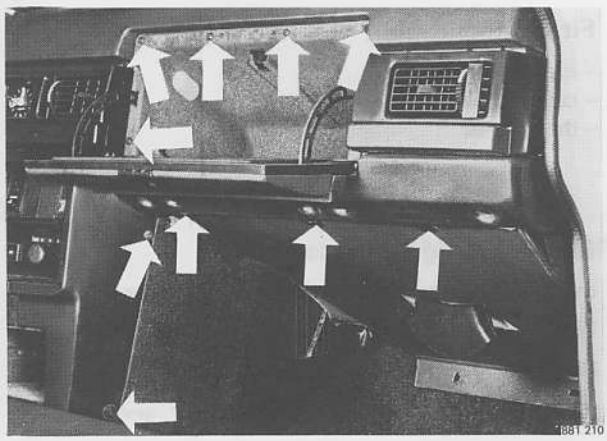

Fitting new type adjustable thermostat

F9

Remove:

- glove compartment
- panel beneath glove compartment
- side panels near heater.

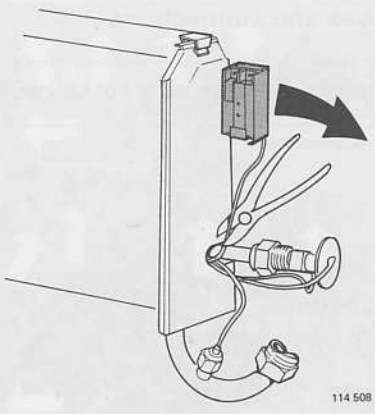

F10

Loosen thermostat, cut off capillary tube

Leave rest of capillary tube in evaporator.

F11

Clean evaporator outlet

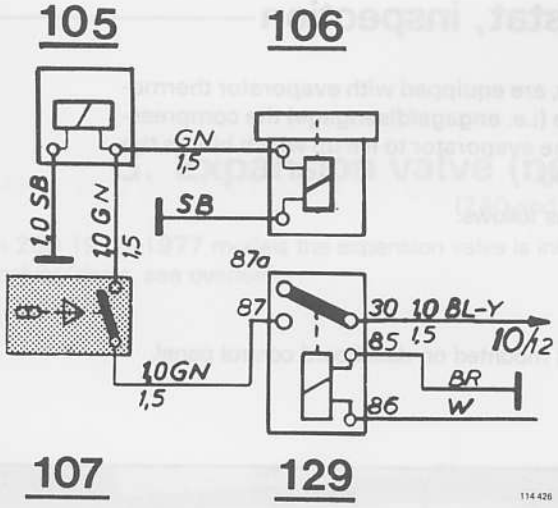

F12

Connect thermostat across AC relay and compressor solenoid

105 Compressor solenoid
106 Solenoid
107 Thermostat + switch
129 AC relay

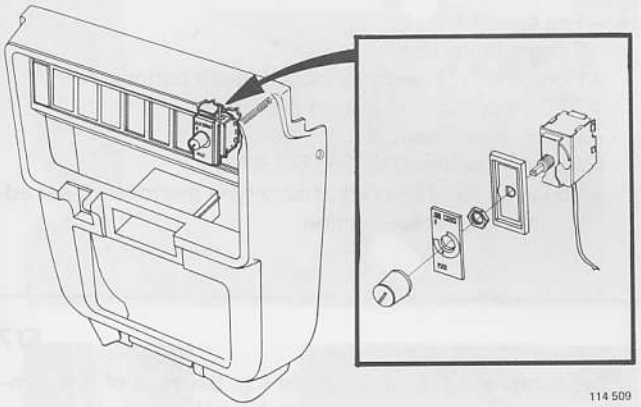

F13

Attach thermostat to control panel

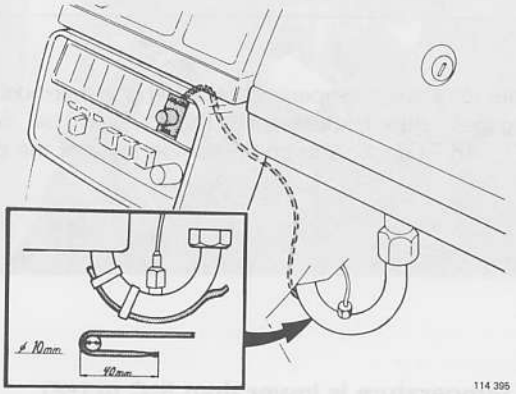

F14

Bend capillary tube and attach it to evaporator outlet

Bend the capillary tube approximately 40 mm (1.5 in) from its end around a 10 mm (0.4 in) diameter pipe.

Attach the tube to the evaporator outlet pipe with two clamps (P/N 944267-4).

F15

Insulate evaporator outlet

Use insulation tape P/N 591235-7.

Refit parts removed.

Evaporator thermostat, inspection

All vehicles, apart from 260 1975–1977 models, are equipped with evaporator thermostats. The purpose of the thermostat is to cycle (i.e. engage/disengage) the compressor. A defective thermostat can usually cause the evaporator to ice up which blocks the air flow and consequently causes poor cooling.

The type and location of the thermostat varies as follows:

240 1975–1978, 260 1978:

Adjustable type mounted on evaporator cover.

240, 260 1979–: Non adjustable thermostat mounted on dashboard control panel.

F16

Inspect thermostat as follows:

TEST CONDITIONS

- Bonnet (hood) open. Doors and windows closed
- Engine speed approx. 33 r/s (2,000 r/min)
- An additional fan must be used to cool the condenser.

DASHBOARD CONTROL SETTING

- Fan speed 1
- Temperature control at COOL
- Floor and DEF shutters closed (push buttons out)
- REC (recirculation) button depressed
- Panel vents open
- Air-cond switch ON (1975–1978)
- 1979– models with adjustable type thermostat: set adjuster knob to blue section.

F17

Check that compressor cycles

After 5–10 min operation check that the thermostat cycles by observing the movement of the compressor clutch. If the compressor does not cycle e.g. because of high ambient temperatures, a road test should be carried out. See F 18.

F18

Road test

(Ambient temperature should not exceed 25°C = 77°F)

Drive the vehicle at approximately 50 km/h (30 mph) and measure the temperature of the air released from the centre panel vents.

Note the lowest temperature at which the thermostat disengages the compressor. This should be 5°–8°C (41°–46°F) depending on the temperature of the cooling air.

F19

If temperature is above 8°C (46°F)

240 1975 – 1978, 260 1978:

Remove the soundproofing and panel on the side of the centre console.

Turn the thermostat screw slightly clockwise.

240, 260 1979–

The thermostat cannot be adjusted and must therefore be replaced.

F20

If temperature is lower than 5°C (41°F)

240 1975 – 1978, 260 1978

Remove the soundproofing and panel on the side of the centre console.

Turn the thermostat screw slightly anticlockwise.

240, 260 1979–

The thermostat cannot be adjusted and must therefore be replaced.

G. Expansion valve (near evaporator), replacement

(240 and 260 1978– models)

On 260 1975–1977 models the expansion valve is incorporated with a discharge pressure valve and is mounted on the receiver/dryer, see overleaf.

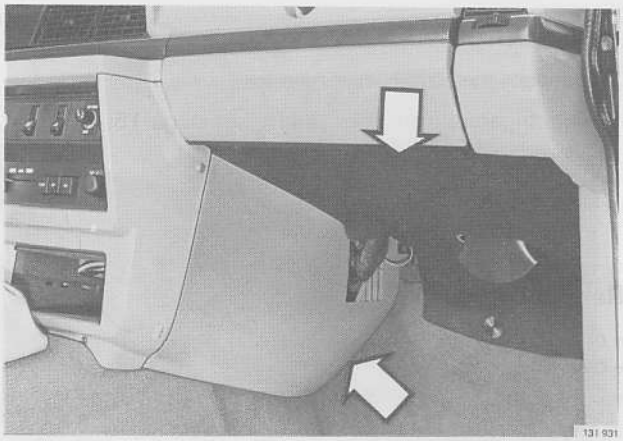

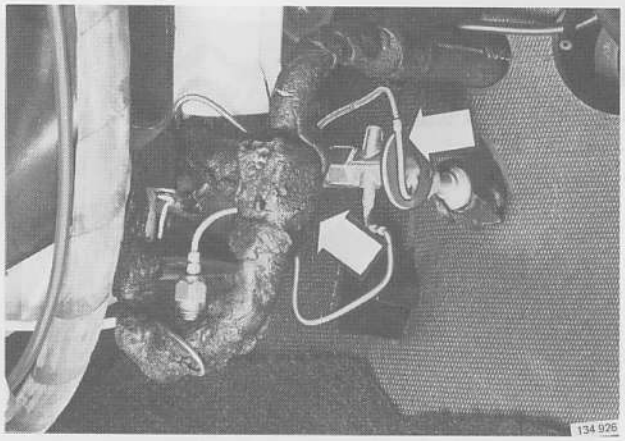

Removing

G1

Disconnect the battery negative lead.

Drain refrigerant from the system, see page 15.

Remove:

– soundproofing panel
– side panels.

G2

Remove:

– evaporator cover
– evaporator outlet insulation
– expansion valve.

NOTE Thermostat location varies with model type and year.

G3

Fit new expansion valve

Use new O-rings, smeared with compressor oil.

Tightening torque **30 Nm (22 ft. lbs.).**

G4

Fit:

– evaporator cover
– thermostat.

Insulate the evaporator outlet pipe.

NOTE Do not insulate the expansion valve.

G5

Replace receiver/dryer or drying agent, see page 58.

Fill system with refrigerant, see page 16.

Refit side panels and soundproofing.

H. Expansion valve, suction discharge valve in receiver/dryer, replacement

Only fitted to 260 1975–1977 models

H1

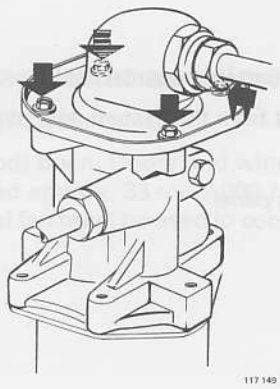

117 149

Removing

Disconnect the battery negative lead.

Drain refrigerant from the system, see page 15.

Mark position of valve body cover.

H2

Remove:

- retaining bolts
- cover
- O-ring.

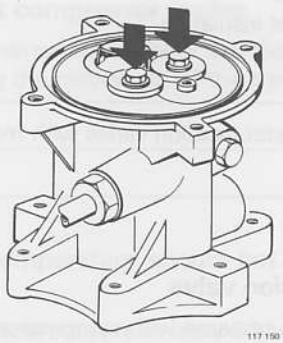

117 150

H3

Remove:

- bolts and lock washers
- valves
- expansion valve O-ring.

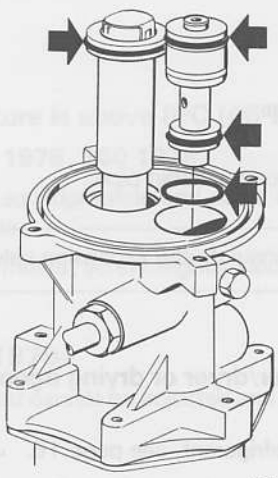

117 151

H4

Smear new O-rings with compressor oil.

Fit two O-rings to expansion valve and one to suction discharge valve.

Place one O-ring in expansion valve seat in valve body.

H5

Fit:

- valves
- lock washers and mounting bolts
- cover O-ring (oil first)
- cover, according to previously made marks.

Replace drying agent, see page 58, operation K3.

Fill system with refrigerant, see page 16.

J. Condenser, replacement

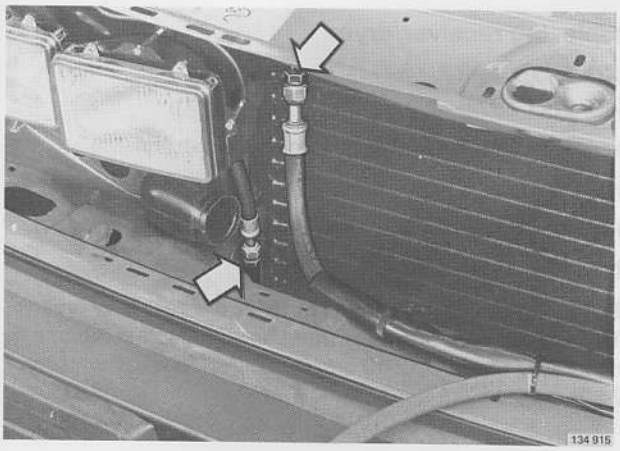

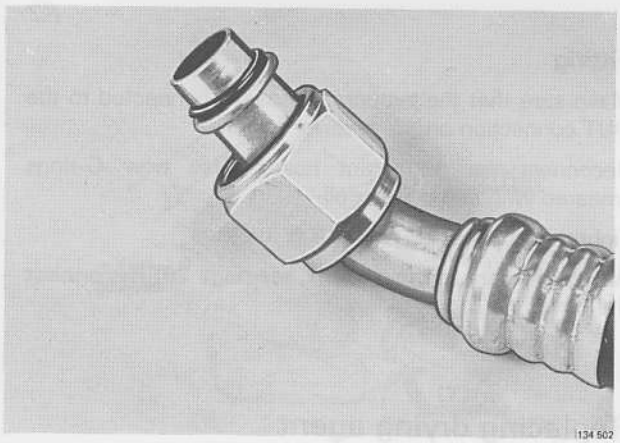

J1

Removing

Disconnect the battery negative lead.

Drain refrigerant from the system, see page 15.

J2

Obtain access to compressor

Remove:

- radiator grille and headlamp frames
- right headlamp, 260 and 240 1979–
- centre stay
- horn bracket
- electric cooling fan (if fitted).

Disconnect refrigerant hoses (plug ends immediately).

Remove condenser

Fitting

J3

Fit condenser

Reconnect refrigerant hoses.

Use new O-rings, smeared with compressor oil.

Tightening torque **17 Nm (12 ft. lbs.)**.

J4

Refit removed parts.

Replace receiver/dryer or drying agent, see next page.

Fill system with refrigerant, see page 16.

Receiver/dryer, replacement

NOTE The receiver/dryer contains a desiccant (drying agent) the purpose of which is to absorb any moisture in the refrigerant circuit. Because of this it is very important that the receiver/dryer is not exposed to air (moisture).

Receiver/dryer location and type varies with engine type and model.

NOTE Following any repairs which involve interrupting the refrigerant circuit or if moisture is suspected in the system, the receiver/dryer or desiccant (drying agent) must be replaced.

K1



240 1975–1977

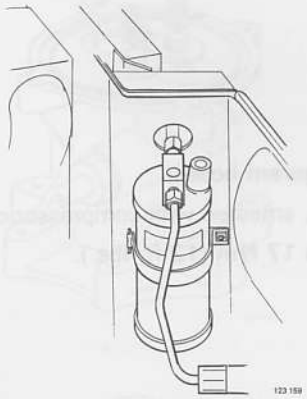

240, 260 1978–

Replacing receiver/dryer

240, 1975–1977
240, 260 1978–

Disconnect the negative lead from the battery.

Drain refrigerant from the system, see page 15.

Disconnect the refrigerant hoses (plug ends immediately).

Replace receiver/dryer

NOTE Measure the amount of oil in the receiver/dryer. The same amount of new oil must be added to the replacement receiver/dryer (260 and Diesel) or York compressor (240).

K2

Fitting

Make sure that the evaporator hose is connected to the OUT connection on the receiver/dryer.

Reconnect the refrigerant hoses. Use new O-rings smeared with compressor oil.

Tightening torque **25 Nm (18 ft lbs.)**.

Add refrigerant to the system, see page 16. Reconnect the battery.

Replacing drying agent

K3

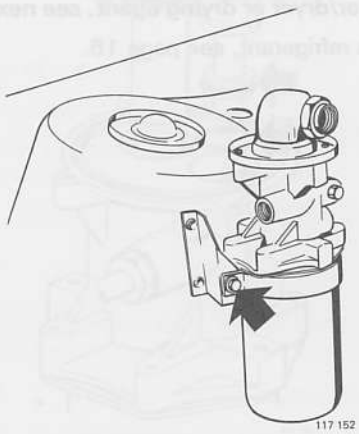

260 1975–1977

Removing

Disconnect the battery negative lead.

Drain refrigerant from the system, see page 15.

Disconnect refrigerant hoses (plug ends immediately as well as in valve body)

Identify valve body position in relation to mounting bracket.

Remove:

– clamp
– receiver/dryer.

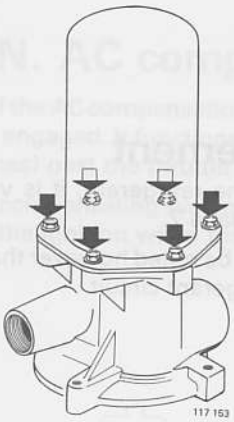

K4

Remove receiver/dryer
(Identify the position of the body first.)

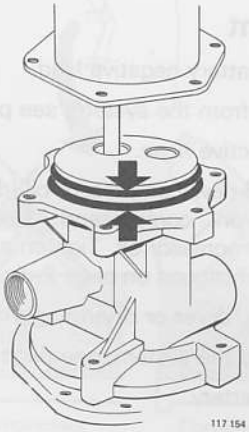

K5

Remove the O-rings. Clean the sieve and remove the bag containing the drying agent.

Smear the new O-rings with compressor oil before fitting.

Place new bag of drying agent in receiver/dryer.

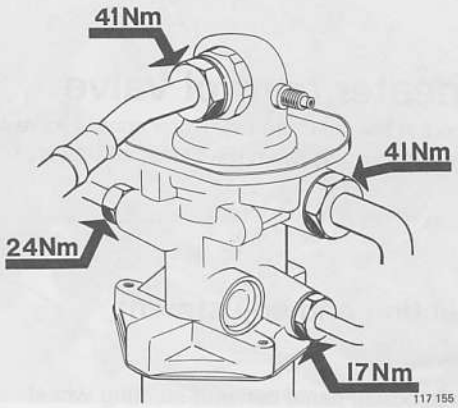

K6

Fit receiver/dryer

Reconnect the refrigerant hoses. Use new O-rings, smeared with compressor oil.

Tightening torque, see fig. (41 Nm = 30 ft. lbs, 24 Nm = 18 ft. lbs, 17 Nm = 12 ft. lbs)

Add refrigerant to the system, see page 16.

Reconnect the battery.

L. Refrigerant hoses, replacement

If one or more of the refrigerant hoses has burst, causing rapid loss of the refrigerant, it is very probable that compressor oil has been lost. This oil must be replaced with new oil. See page 7.

In principle the method for replacing hoses is the same for all types. It should be noted however that the hoses are of varying length and that each hose is intended for a special part of the refrigerant circuit.

L1

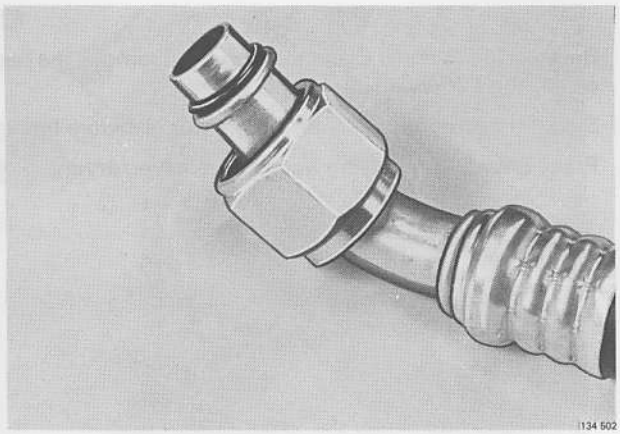

Replacement

Disconnect the battery negative lead.

Drain refrigerant from the system, see page 15.

Replace the defective hose.

If necessary, add new compressor oil (does not apply to systems with York compressor). Use new O-rings, smeared with compressor oil. Tighten all connections to torque, see specifications on page 2–4.

Replace receiver/dryer or drying agent, see page 58.

Add refrigerant to the system, see page 16.

Reconnect the battery.

M. Inspection of mechanical heater control valve

If the air conditioning system is unable to keep passenger compartment cool in hot weather, the heater control valve should be inspected and if necessary adjusted. The problem may be due to the valve not closing when the heater control is at "COOL".

M1

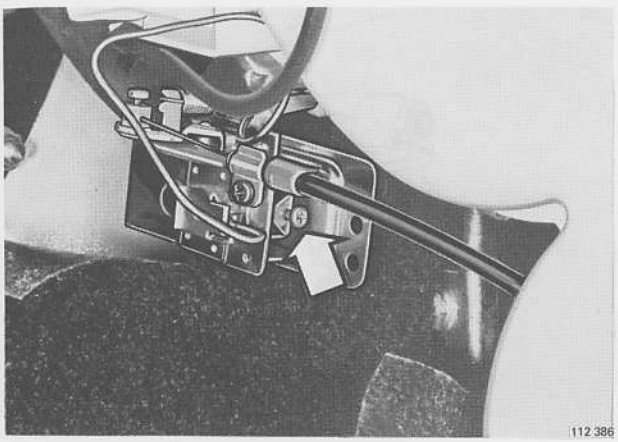

Inspection and adjustment

Remove:

– soundproofing panel beneath steering wheel
– side panels next to heater

Warm up the engine.

Move the heater control to off (closed) and check that the input hose from the engine to the heater control valve is cold. If not, turn the adjuster screw (arrowed) 3/4 turn clockwise.

Check that the hose cools down after a few minutes with the engine idling.

Also check that the heater control valve lever bottoms when the temperature control is set to "COOL".

Apply sealer to the adjuster screw.

Refit side panel and soundproofing.

N. AC compensation – idle speed compensation

The purpose of the AC compensation system is to counteract the increased load on the engine at idle speeds when the compressor is engaged. It functions in principle by supplying additional fuel-air mixture (carburreted engines) or air (injected engines) past the throttle valve when the compressor is engaged.

An alternative compensating system is fitted to certain vehicles (B21A 82 – Sweden, Australia, Canada), and functions by advancing the ignition when the compressor is engaged.

Carburreted engines

N1

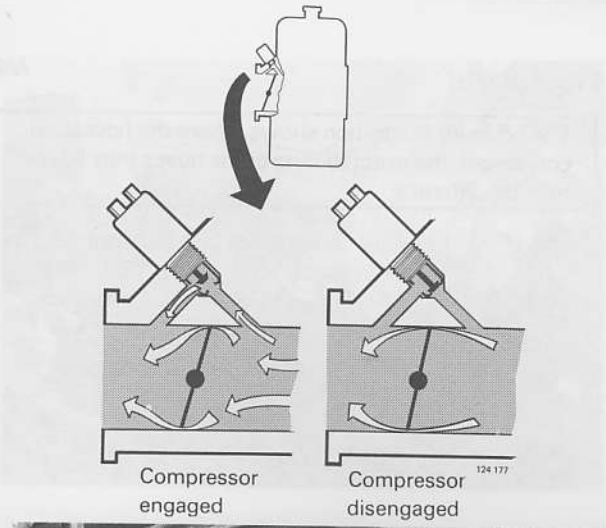

All 1975–1978 models

Idle speed is kept constant when the compressor is engaged by means of a solenoid valve mounted on the carburettor.

When the compressor is engaged the load on the engine increases. On sensing this the solenoid valve opens and allows an additional amount of fuel-air mixture to bypass the throttle valve and maintain a constant idle speed.

The solenoid valve closes the bypass channel when the compressor is disengaged.

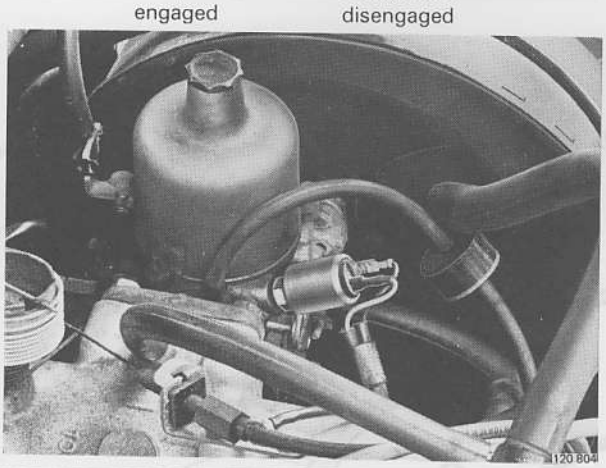

B27A

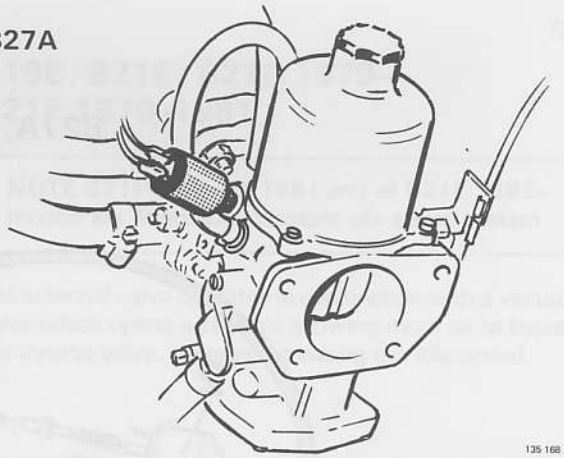

N2

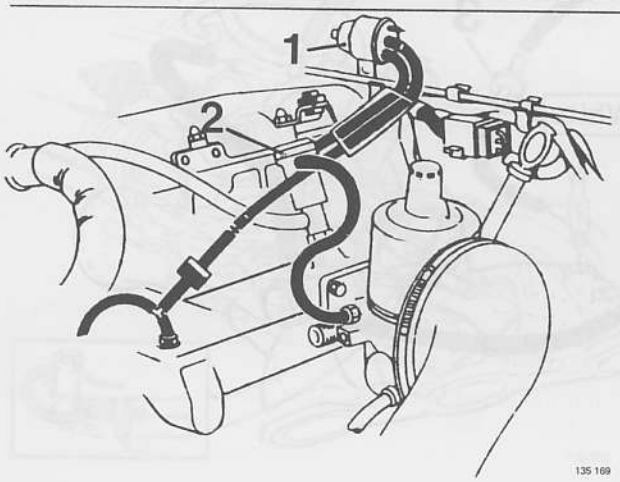

4-cylinder 1979–

(Excl. Sweden, Australia, Canada, B21A 1982–)

The compressor, when engaged, actuates the solenoid valve (1) which in turn opens the vacuum valve (2) allowing more fuel-air mixture to bypass the throttle valve. The idle speed is increased by approximately 3.5 r/s (200 r/min).

> The adjacent illustration shows where the hoses are connected, the exact routing of the hoses may however be different.

N3

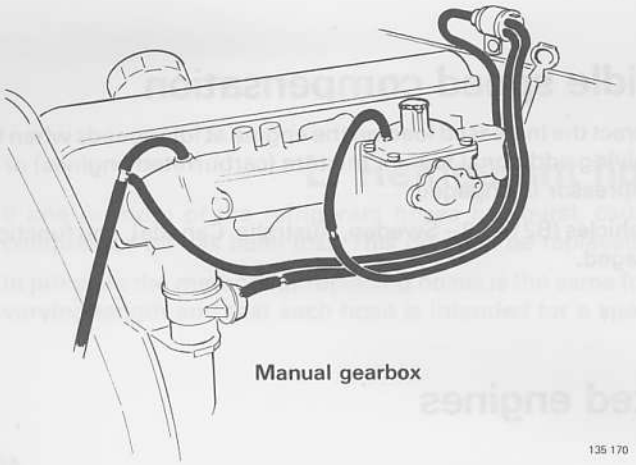

Manual gearbox

135 170

B21A 1982 – (Sweden, Australia, Canada)

The idle speed compensation system functions by advancing the ignition when the compressor is engaged.

Compressor disengaged: The depression in front of the throttle valve is low and consequently the distributor is not affected.

Compressor engaged: The depression after the throttle valve is high, the ignition is advanced and idle speed is kept constant.

N4

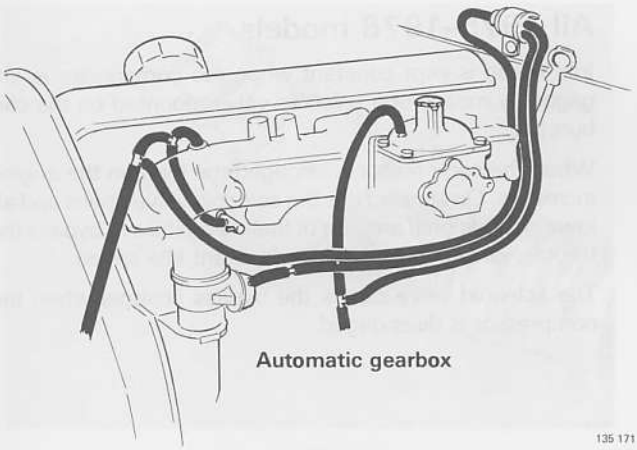

Automatic gearbox

135 171

The adjacent illustration shows where the hoses are connected, the exact routing of the hoses may however be different.

B27A, B28A 1979–

N5

1 Delay valve

2 Solenoid valve. Only 1979– with AC

3 Check valve (White side facing inlet manifold)

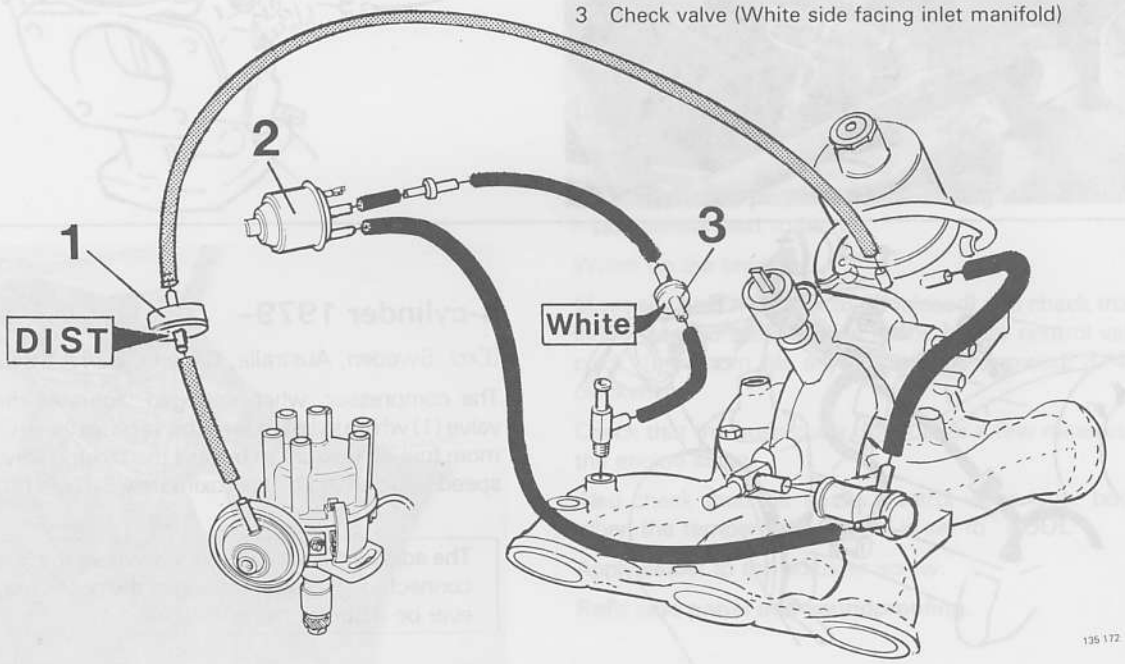

135 172

AC Compensation – injected engines B19–B23

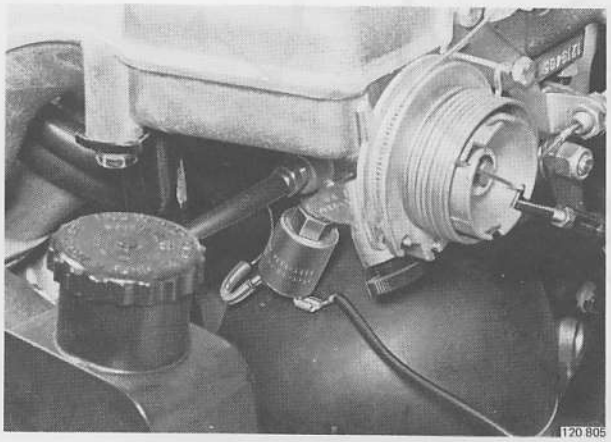

N6

B19E, B21E, B21F, 1975–1978

A solenoid valve opens a bypass channel allowing more air to flow past the throttle valve when the compressor is engaged and the engine is idling.

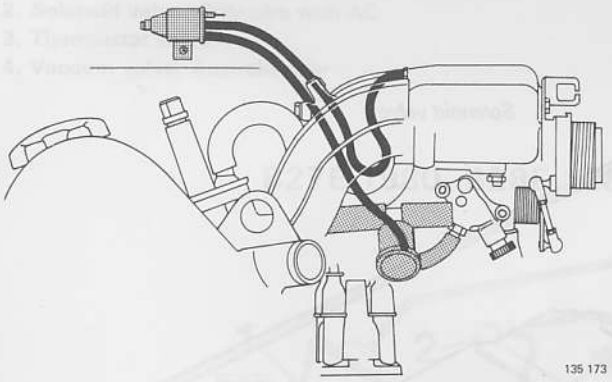

N7

B19E, B21E, B23E 1979–
B21F 1979–1981

NOTE B21F California 1981 and all B21F 1982– models are fitted with constant idle speed system

The solenoid valve operates in conjunction with a vacuum valve which opens a channel allowing more air to bypass the throttle valve, thereby increasing the idle speed.

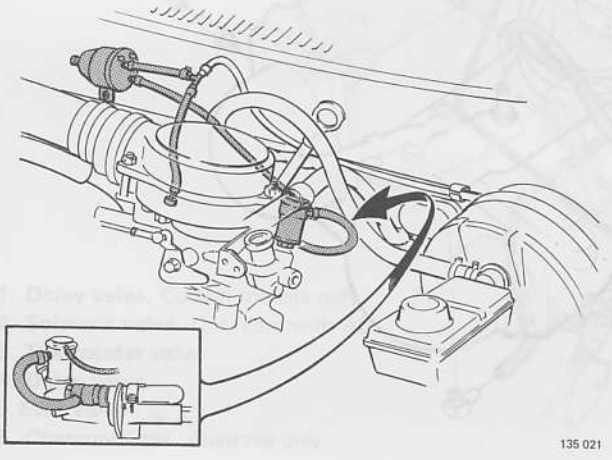

N8

B21ET 1981–

(Shown adjacent)

B21FT is fitted with constant idle speed system (CIS) and therefore does not require AC compensation.

B27E 1975–1978



N9

The solenoid valve opens when the compressor is engaged, and more air bypasses the throttle valve.

B27E 1979–1980, B28E 1981–

(Excl. Sweden and Australia)

N10

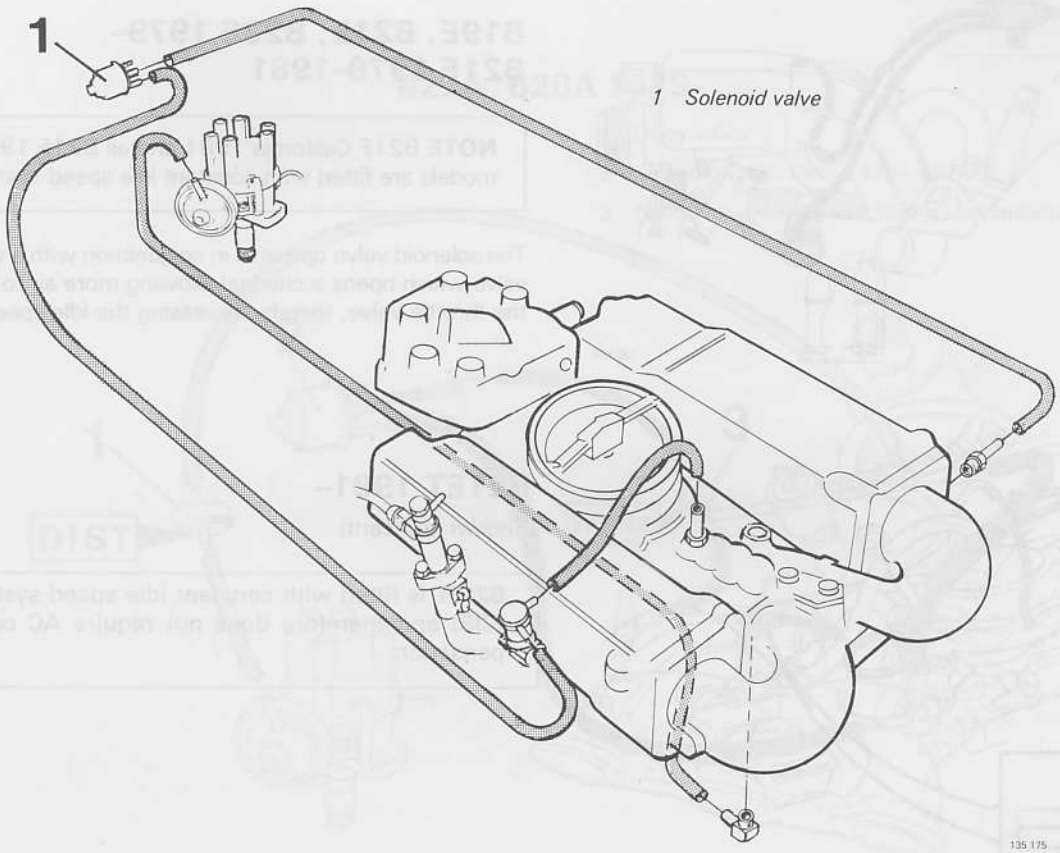

1 Solenoid valve

B27E 1979 Sweden and Australia

N11

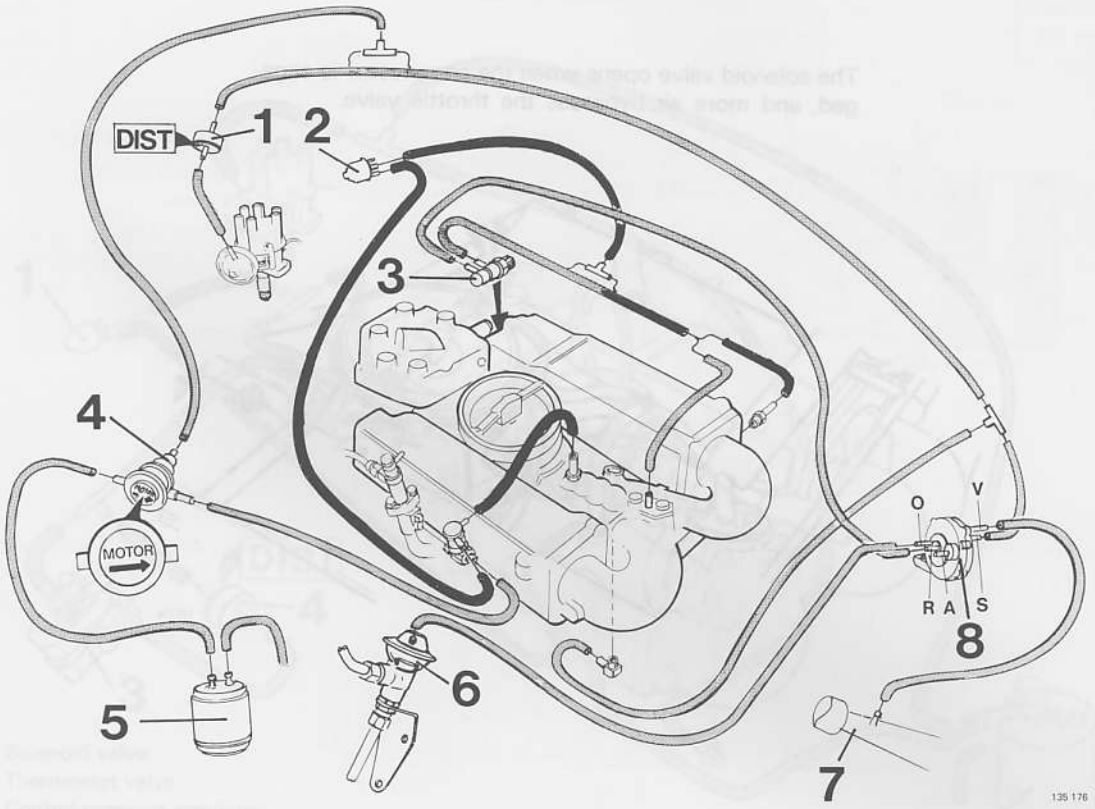

1. **Delay valve.** Certain models only
2. **Solenoid valve.** Only cars with AC
3. **Thermostat valve**
4. **Vacuum valve.** Australia only
5. **Charcoal filter.** Australia only
6. ***EGR valve**
7. **Air inlet for filter**
8. **Vacuum amplifier**

*Exhaust gas recirculation

B27E 1980, B28E 1981 – Sweden and Australia

N12

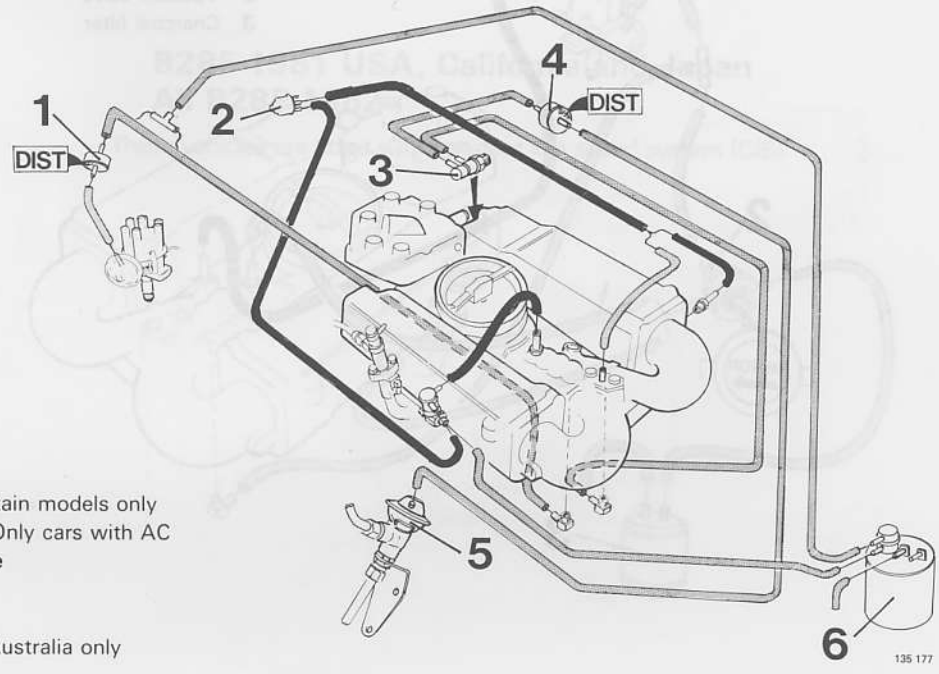

1. **Delay valve.** Certain models only
2. **Solenoid valve.** Only cars with AC
3. **Thermostat valve**
4. **Delay valve**
5. **EGR valve**
6. **Charcoal filter.** Australia only

B27 1975–1978

N13

The solenoid valve opens when the compressor is engaged, and more air bypasses the throttle valve.

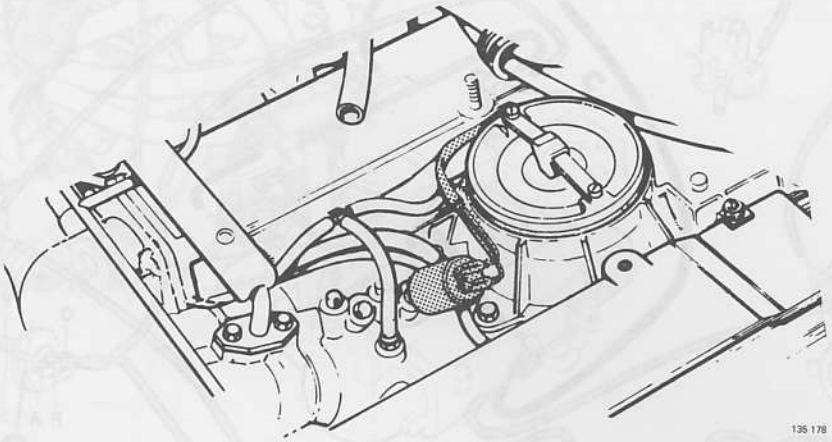

B27 F 1979

All markets

N14

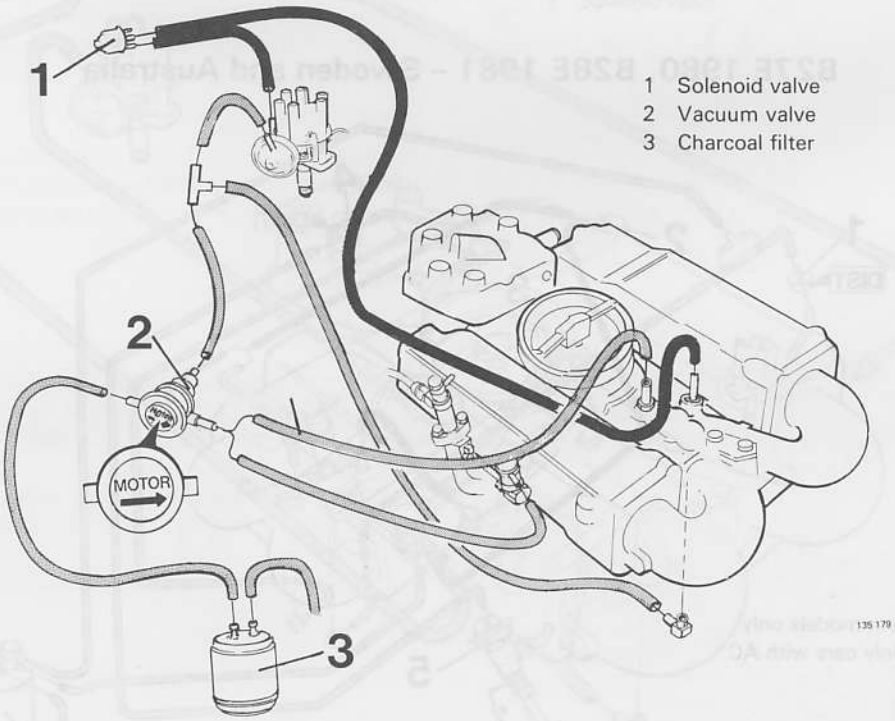

1 Solenoid valve
2 Vacuum valve
3 Charcoal filter

B28F 1980 (all markets)
B28F 1981 USA Federal and Canada

N15

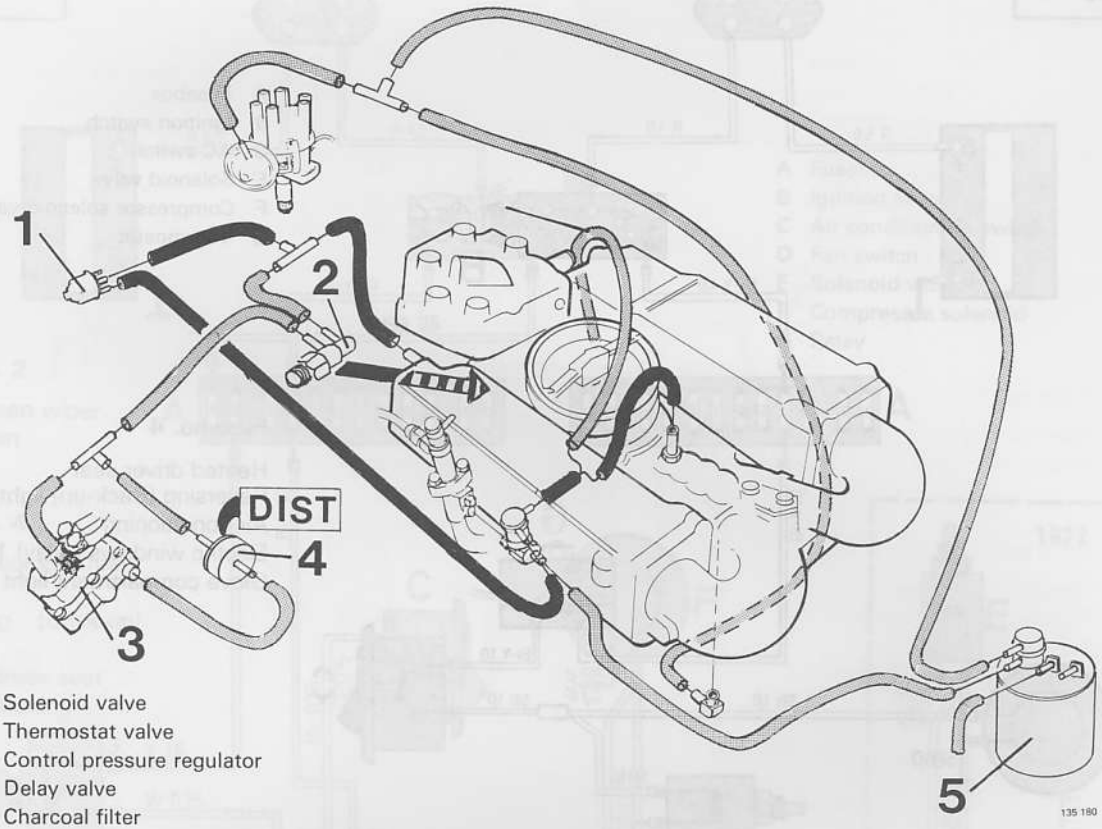

1 Solenoid valve
2 Thermostat valve
3 Control pressure regulator
4 Delay valve
5 Charcoal filter

N16

B28F 1981 USA, California and Japan
All B28F 1982–

These vehicles are fitted with constant idle speed system (CIS)

Air conditioning 240
1975–1977

Colour codes, see page 73

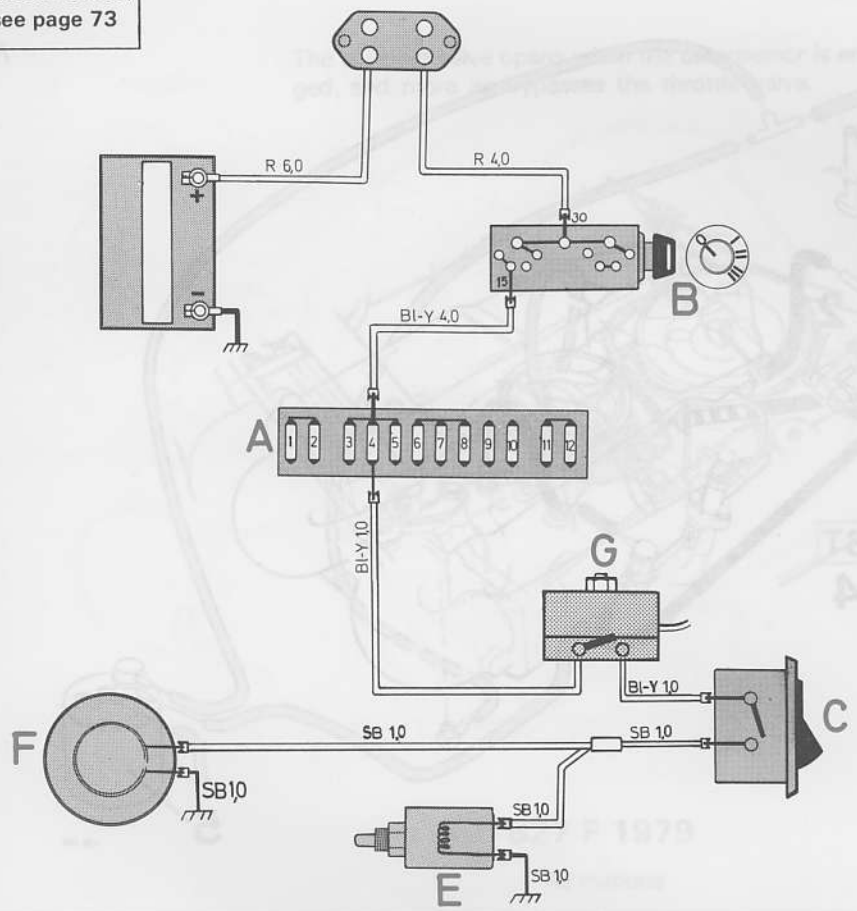

A Fusebox
B Ignition switch
C AC switch
E Solenoid valve
F Compressor solenoid valve
G Thermostat

Fuse no. 4

Heated driver seat
Reversing (Back-up) light
Air conditioning
Electric windows (relay) 1977 only
Glove compartment light

Air conditioning engaged

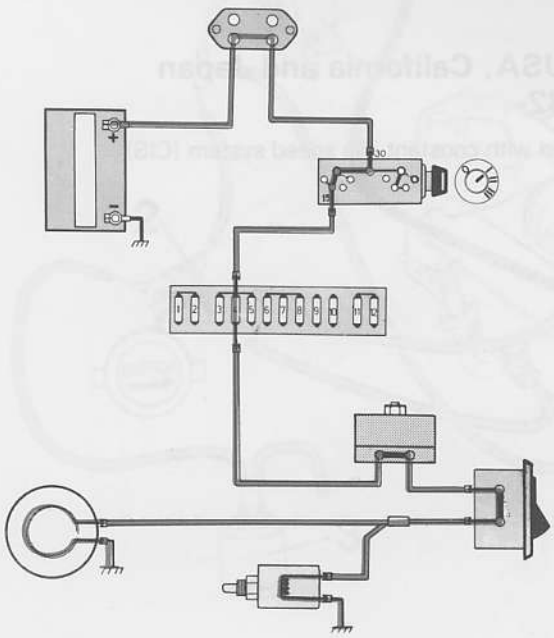

135 199

Air conditioning 260
1975–1977

Colour code, see page 73

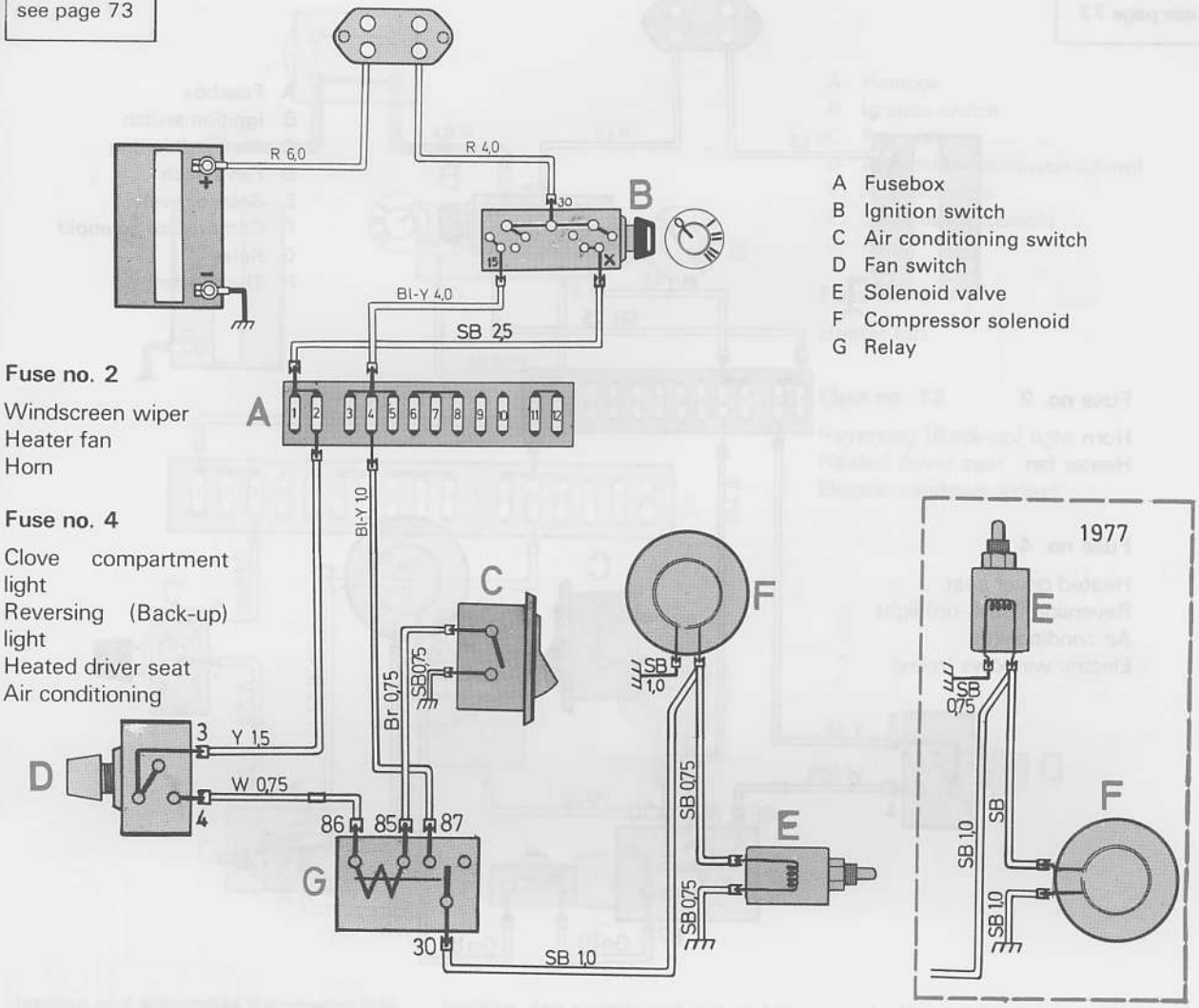

A Fusebox
B Ignition switch
C Air conditioning switch
D Fan switch
E Solenoid valve
F Compressor solenoid
G Relay

Fuse no. 2

Windscreen wiper
Heater fan
Horn

Fuse no. 4

Clove compartment light
Reversing (Back-up) light
Heated driver seat
Air conditioning

Air conditioning engaged

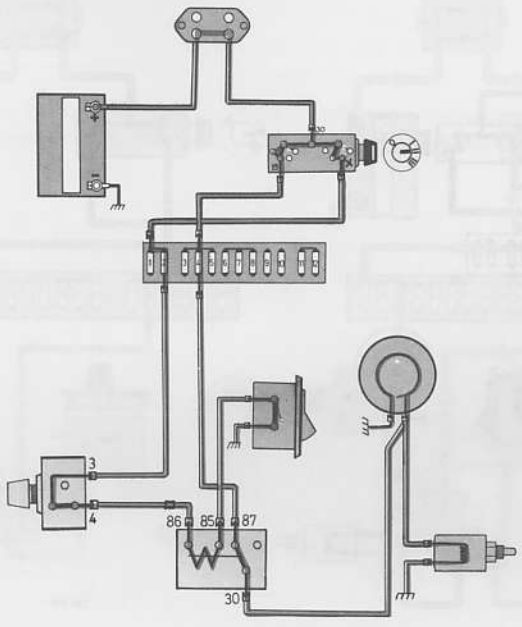

112 867

Air conditioning 240, 260
1978

Colour code, see page 73

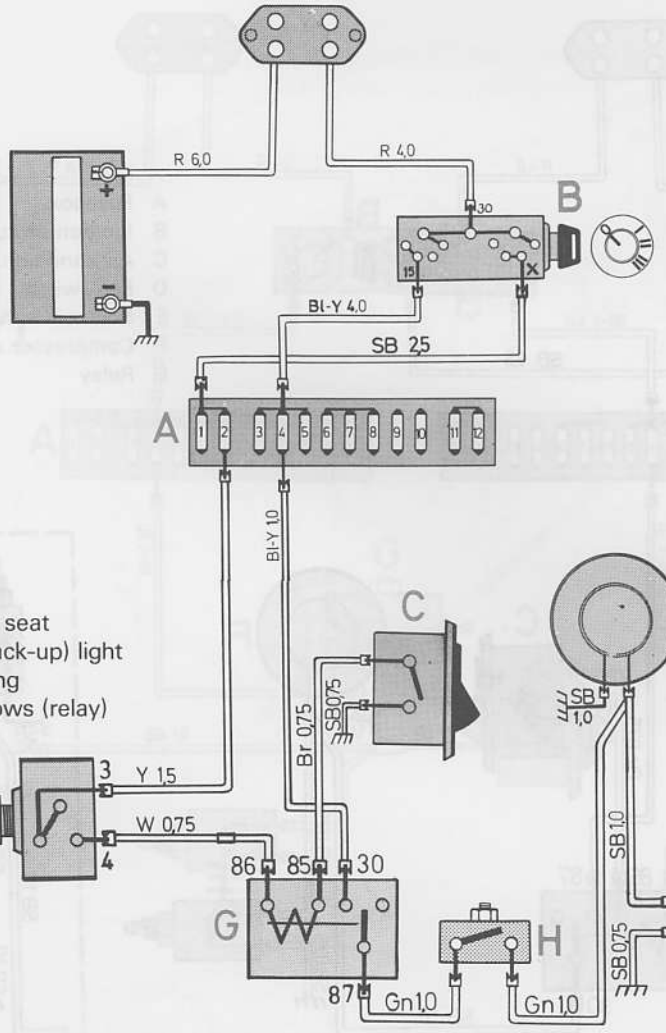

A Fusebox
B Ignition switch
C Air conditioning
D Fan switch
E Solenoid valve
F Compressor solenoid
G Relay
H Thermostat

Fuse no. 2

Horn
Heater fan

Fuse no. 4

Heated driver seat
Reversing (Back-up) light
Air conditioning
Electric windows (relay)

Air conditioning engaged
(Fan switch off)

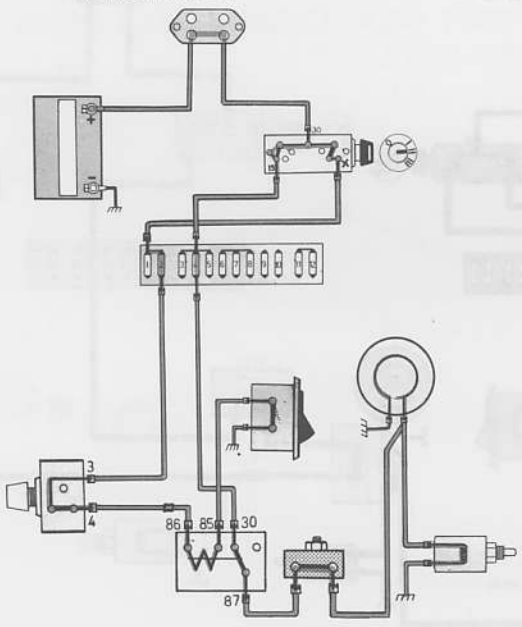

135 200

Air conditioning 240, 260 1979

Colour code, see page 73

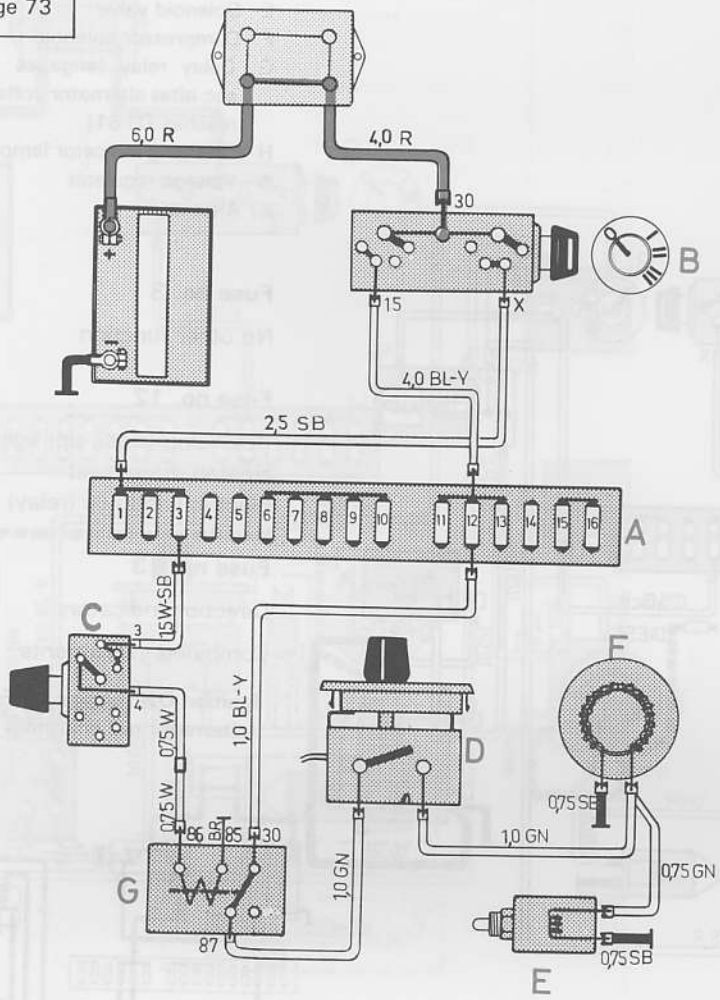

A Fusebox
B Ignition switch
C Fan switch
D Adjustable thermostat control
E Solenoid valve
F Compressor solenoid
G Relay

Fuse no. 3

Heater fan

Fuse no. 12

Reversing (Back-up) light
Heated driver seat
Electric windows (relay)

Ignition and adjustable thermostat ON. Fan switch OFF

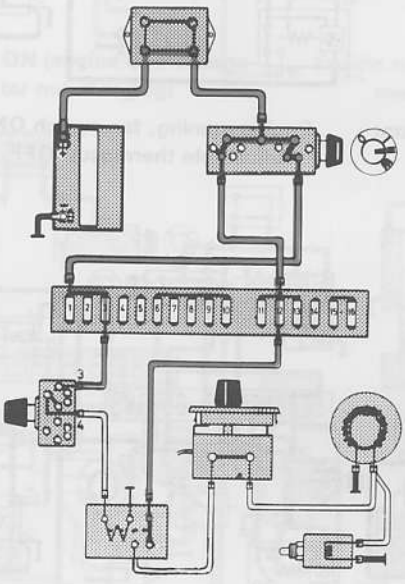

Ignition, fan switch and adjustable thermostat, ON

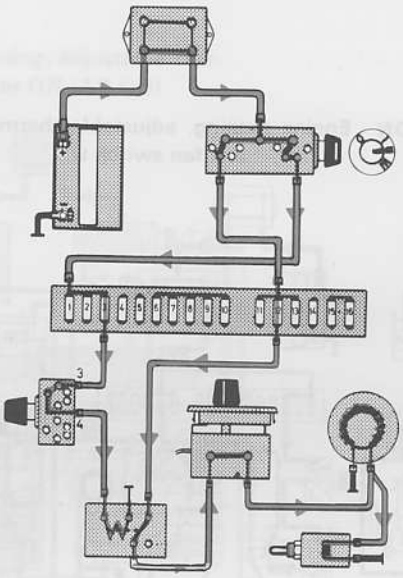

Ignition and fan switch ON Adjustable thermostat OFF

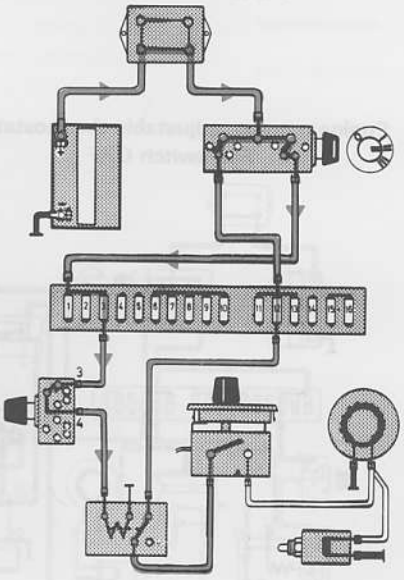

129821

Air conditioning 240, 260
1980

Colour code, see page 73

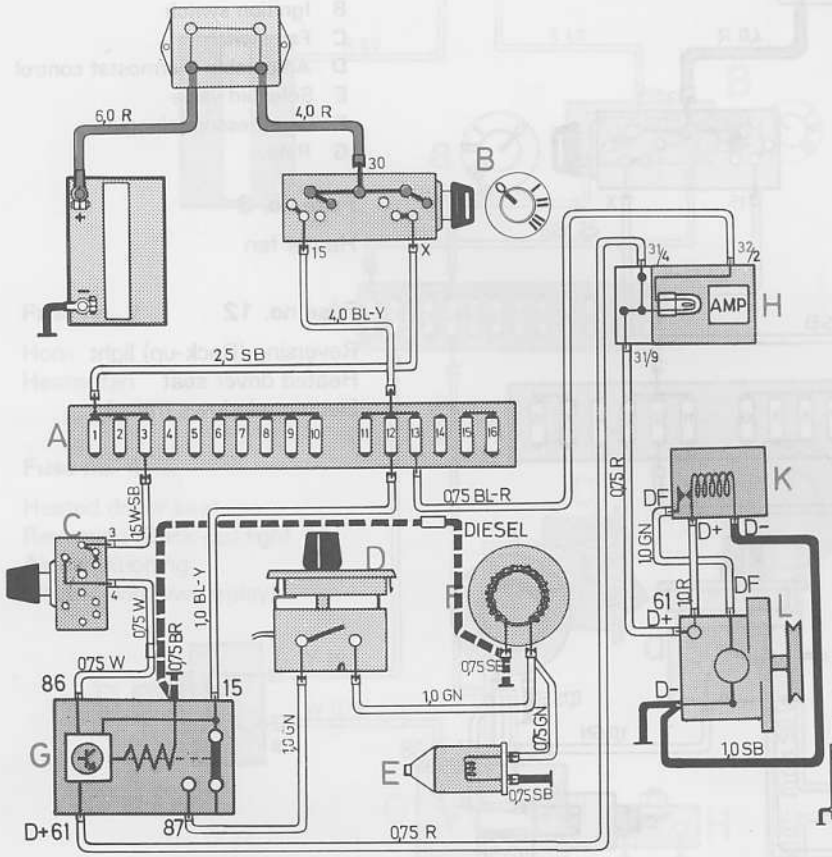

A Fusebox
B Ignition switch
C Fan switch
D Adjustable thermostat
E Solenoid valve
F Compressor solenoid
G Delay relay (engages 10 sec after alternator voltage reaches D+**61**)
H Charging indicator lamp
K Voltage regulator
L Alternator

Fuse no. 3

No other function

Fuse no. 12

Reversing (Back-up) light
Heated driver seat
Electric windows (relay)

Fuse no. 13

Direction indicators

Combined instruments

Ignition ON, engine OFF (alternator not charging)

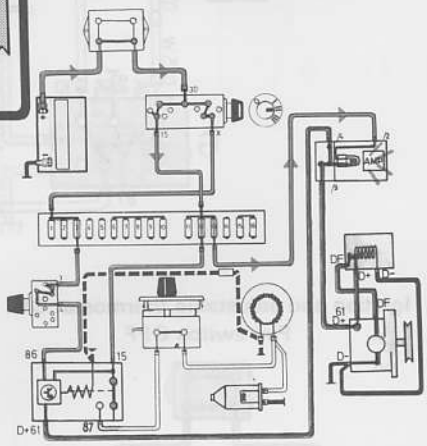

Engine running, adjustable thermostat ON Fan switch OFF

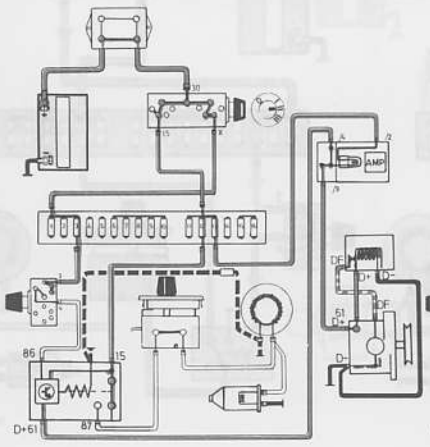

Engine running. adjustable thermostat and fan switch ON

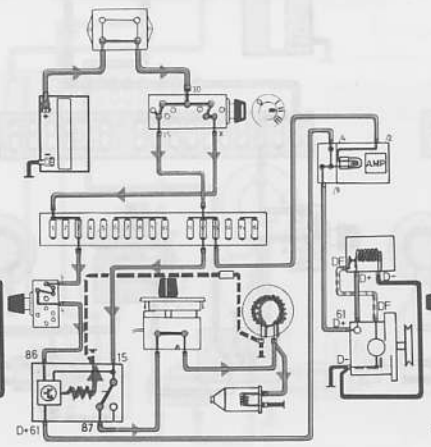

Engine running, fan switch ON Adjustable thermostat OFF

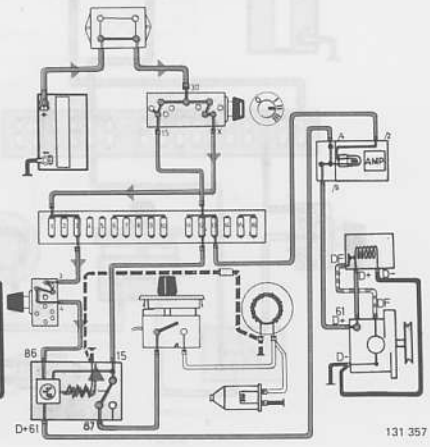

131 357

Air conditioning 240, 260 1981–

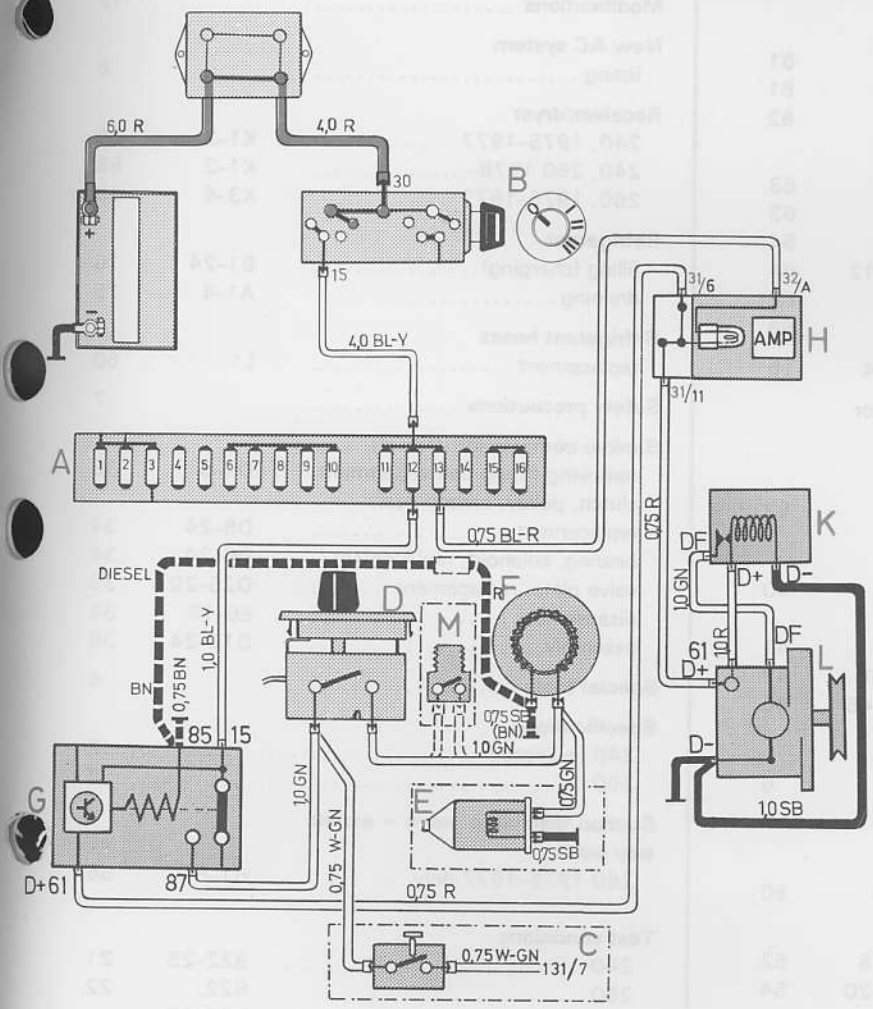

A Fusebox
B Ignition switch
C Microswitch (CIS vehicles only)
D Thermostat
E Solenoid valve (excl. CIS vehicles)
F Compressor solenoid
G Delay relay (engages 10 sec after alternator voltage at D+**61**)
H Charging indicator lamp
K Voltage regulator
L Alternator
M Cut out switch (located on receiver/dryer) USA only

Fuse no. 12

Reversing (Back-up) light
Heated driver seat
Electric windows (relay)

Fuse no. 13

Direction indicators
Combined instrument

Ignition ON (engine OFF alternator not charging)

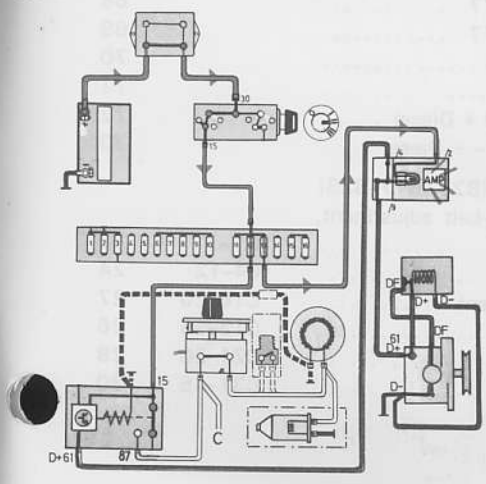

Engine running, adjustable thermostat ON (AC ON)

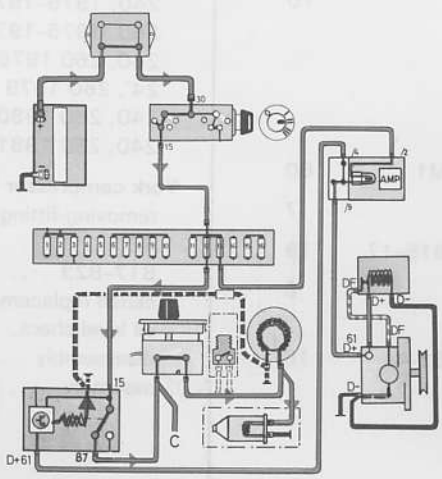

Engine running, adjustable thermostat OFF (AC OFF)

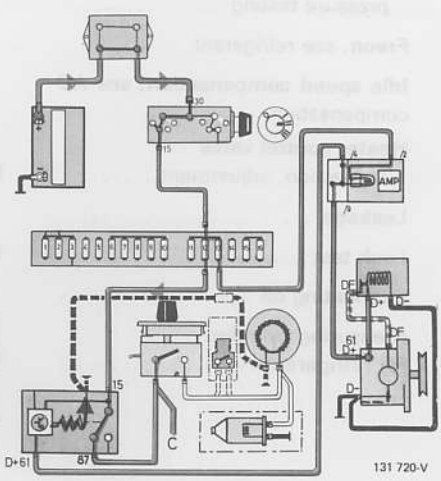

conditioning 240, 260
1981–

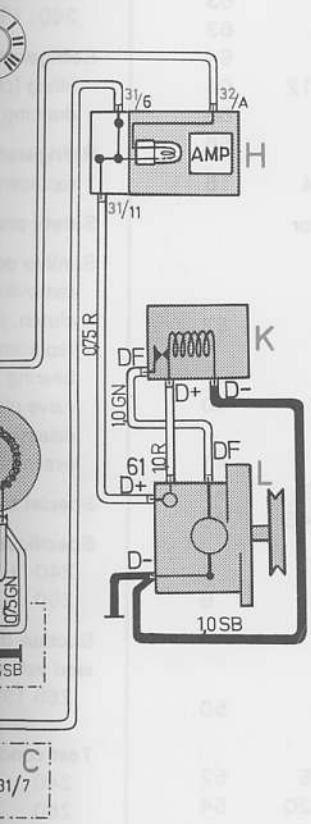

A Fusebox
B Ignition switch
C Microswitch (CIS vehicles only)
D Thermostat
E Solenoid valve (excl. CIS vehicles)
F Compressor solenoid
G Delay relay (engages 10 sec after alternator voltage at D+**61**)
H Charging indicator lamp
K Voltage regulator
L Alternator
M Cut out switch (located on receiver/dryer) USA only

Fuse no. 12

Reversing (Back-up) light
Heated driver seat
Electric windows (relay)

Fuse no. 13

Direction indicators
Combined instrument

Colour code

SB	= black
GR	= grey
W	= white
R	= red
BN	= brown
Y	= yellow
P	= pink
B	= blue
GN	= green
OR	= orange
VO	= violet

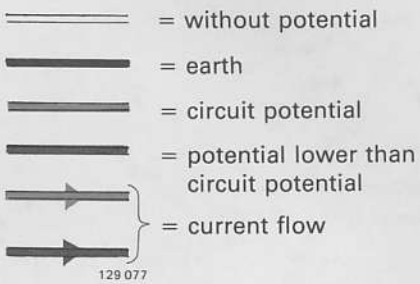

ning, adjustable thermostat ON (AC ON)

Engine running, adjustable thermostat OFF (AC OFF)

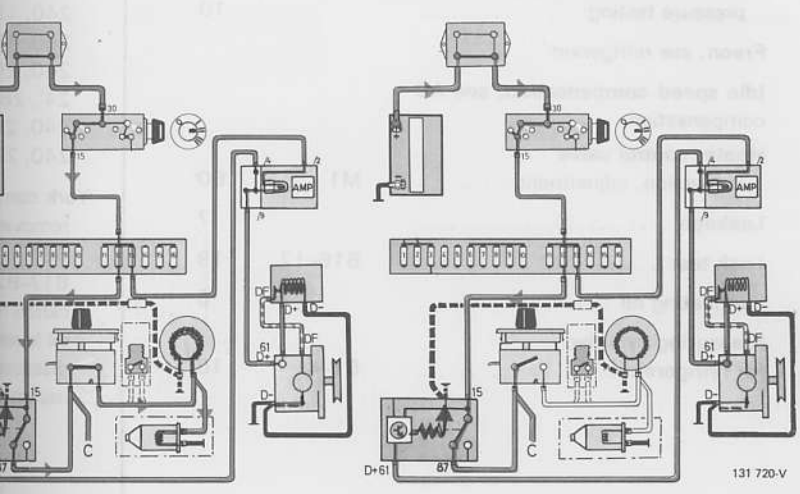

Index

	Operation	Page
AC compensation		
carburetted engines,		
all 1975–1978	N1	61
4 cyl 1979–	N2–4	61
6 cyl 1979–	N5	62
Injected engines		
4 cyl 1975–1978	N6	63
4 cyl 1979–	N7–8	63
6 cyl E 1975–1978	N9	64
6 cyl E 1979–	N10–12	64
6 cyl F 1975–1978	N13	66
6 cyl 1979–	N14	66
Charging system	B1–24	16
Clutch replacement, see respective compressor		
Compressor, see respective manufacturer		
Condenser		
replacement	J1–4	57
Delco compressor (B27, B28)		
removing-fitting-belt adjustment	E1–3	40
clutch, pulley, bearing, solenoid replacement	E4–5	41
disassembly	E6–27	42
assembly	E28–45	46
Desiccant (see drying agent)		
Drying agent		6
Evaporator		
Evaporator		
replacement	F1–8	50
Evaporator thermostat		
replacement, modification	F9–15	52
inspection	F16–20	54
Expansion valve		
240 1975–	G1–5	55
260 1978–	G1–5	55
2 260 1975–1977	H1–5	56
Evacuating system	B1–10	16
Fault tracing		
symptoms		8
pressure testing		10
Freon, see refrigerant		
Idle speed compensation, see AC compensation		
Heater control valve		
Inspection, adjustment	M1	60
Leakage		7
Leak test	B16–17	19
Lubricating oil		6
Measuring cylinder for refrigerant	B1–4	16
Modifications		12
New AC system		
fitting		6
Receiver/dryer		
240, 1975–1977	K1–2	58
240, 260 1978–	K1–2	58
260, 1975–1977	K3–6	58
Refrigerant		
filling (charging)	B1–24	16
draining	A1–4	15
Refrigerant hoses		
replacement	L1	60
Safety precautions		7
Sankyo compressor (Diesel)		
removing-fitting-belt adjustment	D1–5	33
clutch, pulley, carbon seal, replacement	D6–24	34
bearing, solenoid, replacement	D6–24	34
valve plate, replacement	D25–29	39
disassembly	E6–15	34
assembly	D16–24	36
Special tools		4
Specifications		
240 (+ Diesel)		2
260		3
Suction discharge valve – expansion valve		
260 1975–1977 only	H1–5	56
Test conditions		
240	B22–25	21
260	B22, B26–27	22
Thermostat, see evaporator thermostat		
Tightening torque		
240		3
260		4
Wiring diagrams		
240, 1975–1977		68
260, 1975–1977		69
240, 260 1978		70
24', 260 1979		71
240, 260 1980 + Diesel		72
240, 260 1981– + Diesel		73
York compressor (B20, B17–B23)		
removing-fitting-belt adjustment, B20	C1–3	23
B17–B23	C4–12	24
clutch replacement	C16–20	27
oil level check,	C13–15	26
disassembly	C21–20	28
assembly	C31–45	30

Index



VOLVO SUPPORTS VOLUNTARY
MECHANIC CERTIFICATION
BY THE N.I.A.S.E.

(U.S.A. only)

Service literature

Your
most important
special tool

VOLVO

TP 30461/1 US
6000.7.84
Printed in U.S.A.