# CO adjustment

| Section | Group |
|---|---|
| 2 | 25 |

CO adjustment
B21F and B28F
(sealed)
1981–

## B21F and B28F (sealed)
## 1981–

VOLVO

# Contents


| | *Operation* | *Page* |
|---|---|---|
| **Technical information** | | 1 |
| **Specification** | | 2 |
| **Special tools** | | 3 |
| **CO adjustment** | | |
| – **B21F** | A1-A22 | 4 |
| – **B28F** | B1-B18 | 10 |



**TP 30400/1**
4500. 04. 81
Printed in U.S.A.

# Technical information

## Sealed CO adjustment.

Initial CO setting is made at the factory and should not need be changed. The access hole for CO adjustment is sealed with a steel ball. If the CO values are outside limits, and all other causes for incorrect CO readings have been checked, the procedures in this manual should be used when adjusting the CO setting.

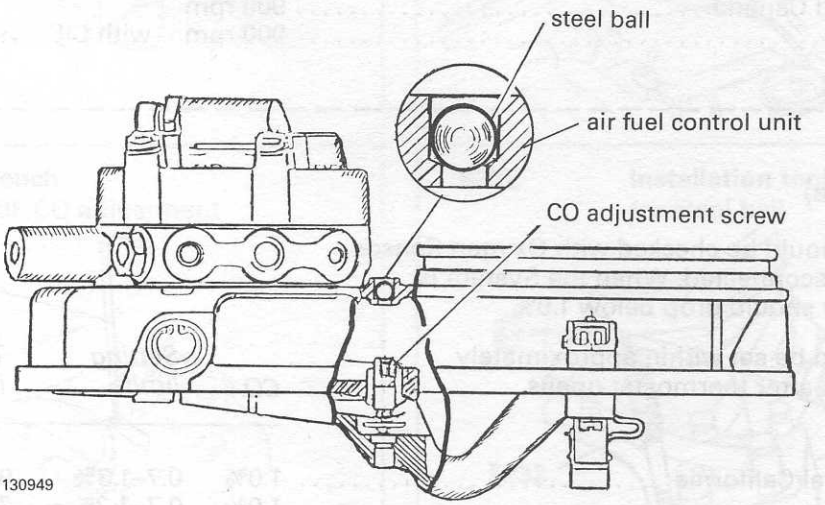


The steel ball, sealing the access hole, must be removed. This must be done by removing the air-fuel control unit and punching out the steel ball from the underside.

# Specifications

## 1981

### Engine idle speed

On models with Constant Idle Speed System = CIS system, idle speed cannot be adjusted. Controls are sealed.

| | *Idle speed (tolerance ± 50 rpm)* | |
|---|---|---|
| B21F, Federal | 900 rpm | |
| B21F, California | 900 rpm | with CIS System |
| B21F-MPG | 750 rpm | with CIS System |
| B21F-Turbo | 900 rpm | with CIS System |
| B28F, Federal and Canada | 900 rpm | |
| B28F, California | 900 rpm | with CIS System |

### CO (hot engine)

The following should be checked with Oxygen Sensor (Lamba sond) disconnected. When the System is reconnected, CO should drop below 1.0%.

**Note:** CO should be set within approximately 8 minutes after thermostat opens.

| | *CO* | *Setting limits* | *To be set at (± 50 rpm)* |
|---|---|---|---|
| B21F, USA Federal/California | 1.0% | 0.7–1.3% | 900 rpm |
| B21F–MPG | 1.0% | 0.7–1.3% | 750 rpm |
| B21F–Turbo | 1.0% | 0.7–1.3% | 900 rpm |
| B28F, Canada and USA Federal/California | 1.0% | 0.7–1.3% | 900 rpm |

# Special Tools

**5015** **Wrench**
B21F

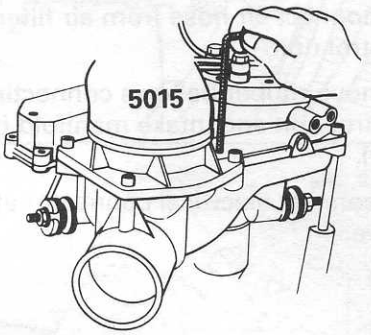


**5102** **Wrench**
B28F CO adjustment

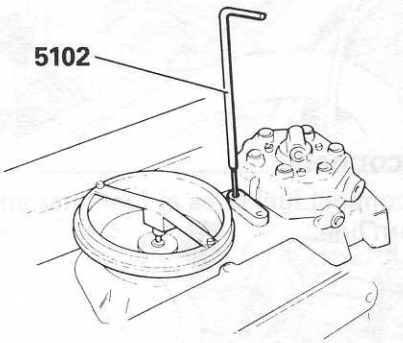


**5151** **Valve and hose kit**
For CO meter B28F

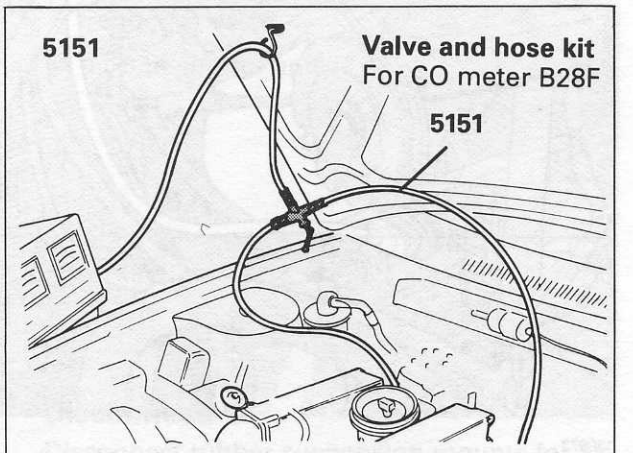


**5232** **Installation tool**
for steel ball

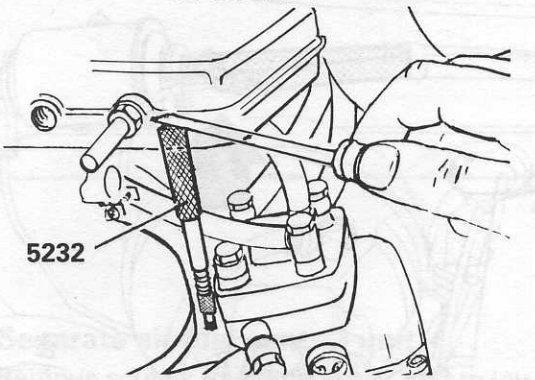

# CO adjustment
# B21F

A1

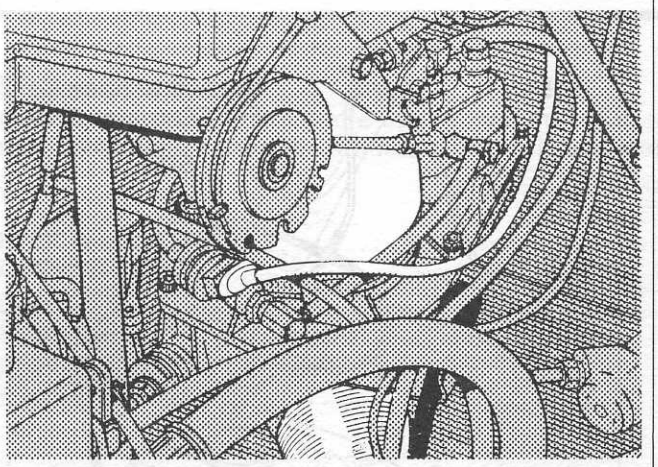

130973

**Remove.**

Disconnect air hose from air filter at air-fuel control unit.

Remove rubber bellows connecting air-fuel control unit and intake manifold (throttle unit).

Disconnect electrical connector at frequency valve.

A2

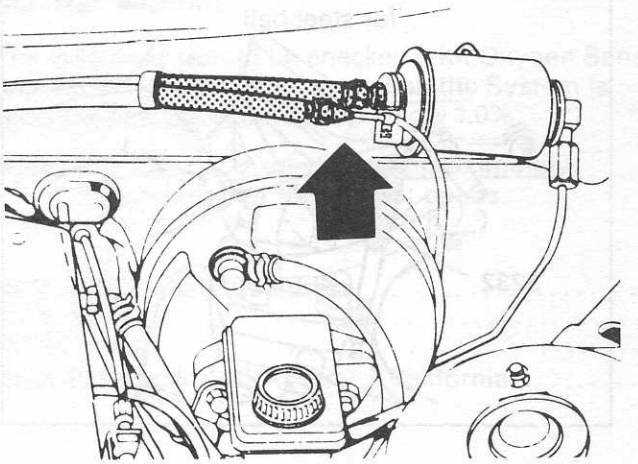

130971

**Disconnect.**

Disconnect fuel lines at fuel filter and fuel return line.

A3

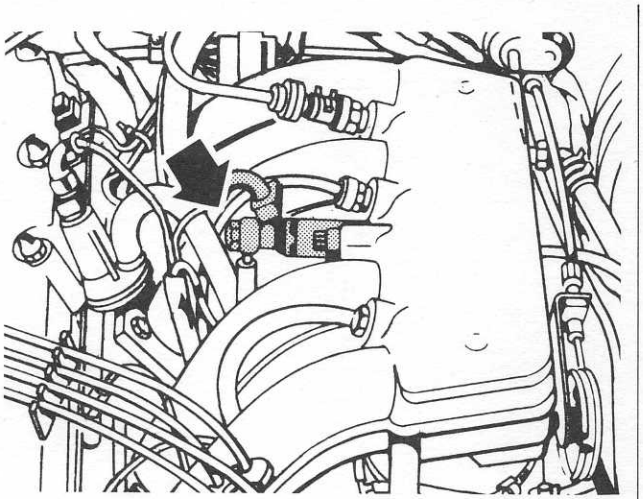

130972

**Disconnect.**

Disconnect fuel line at cold start injector.

A4

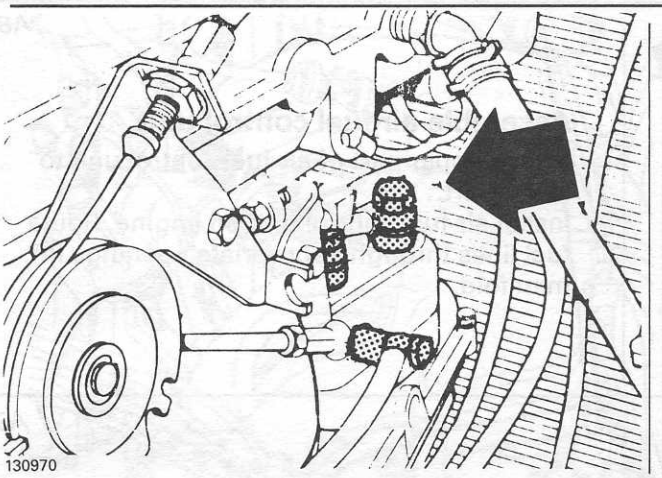
130970

**Disconnect.**

Disconnect fuel lines for

- injectors
- control pressure regulator
- frequency valve

at air-fuel control unit.

A5

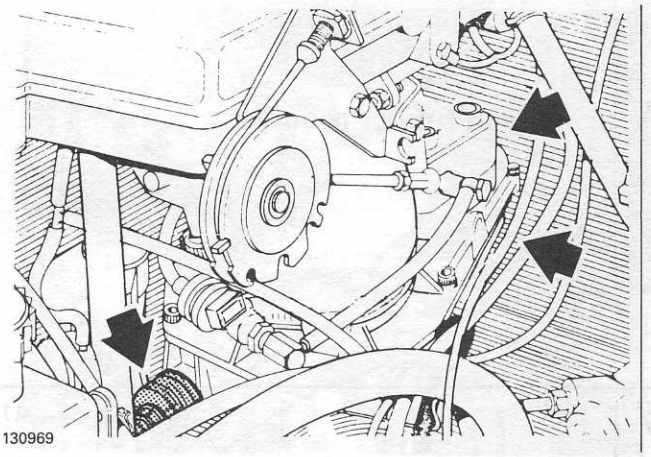
130969

**Disconnect.**

Disconnect rubber suspension mounts for air-fuel control unit.
Remove air-fuel control unit.

A6

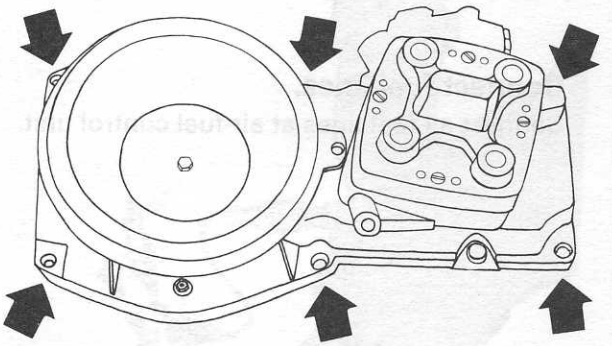
130966

**Separate air-fuel control unit.**

Remove screws retaining upper part to lower part.
Remove upper part.

A7

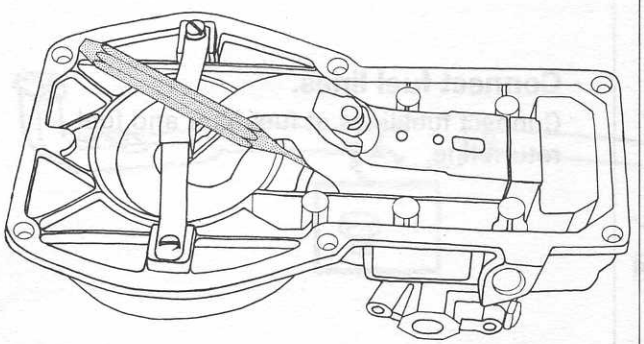
130967

**Remove steel ball.**

Put upper part upside down. No further disassembly is required.

Use a **3 mm** punch, possibly bent slightly, to punch out steel ball.

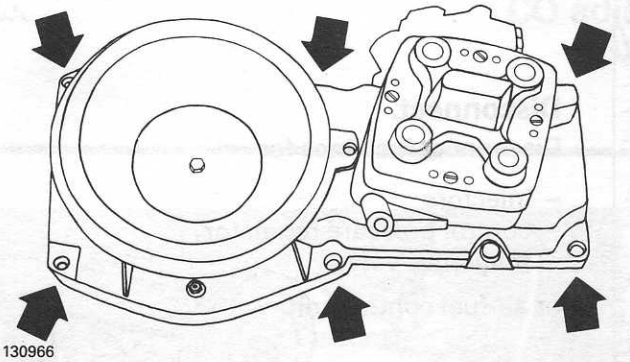
130966

A8

**Assemble air-fuel control unit.**

Attach upper part of air-fuel control unit to lower part.

Install air-fuel control unit on engine. Route fuel lines through appropriate openings in manifold.

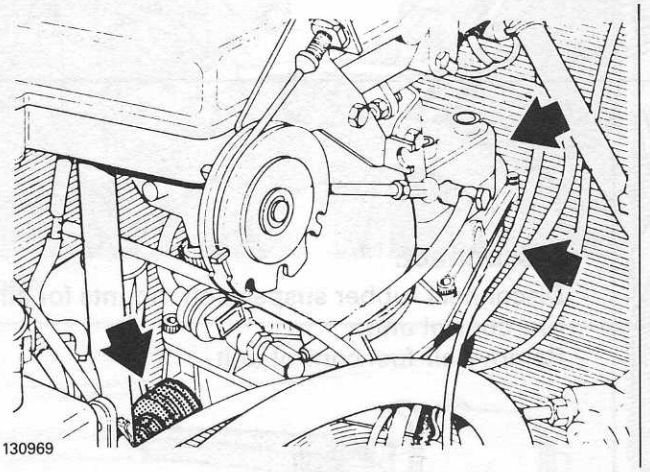
130969

A9

**Attach rubber mounts.**

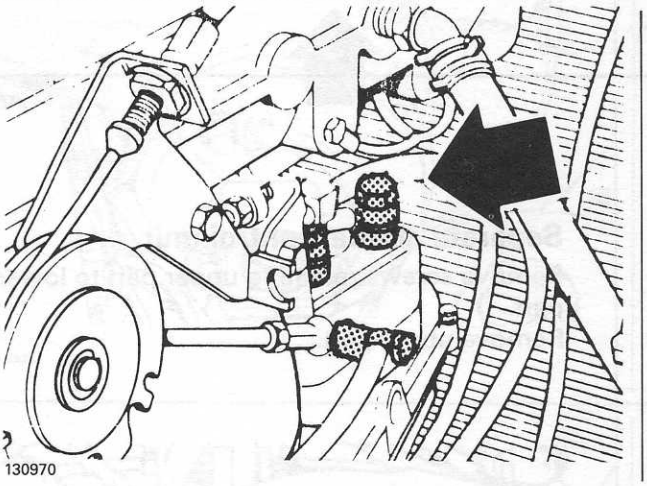
130970

A10

**Connect fuel lines.**

Connect all fuel lines at air-fuel control unit.

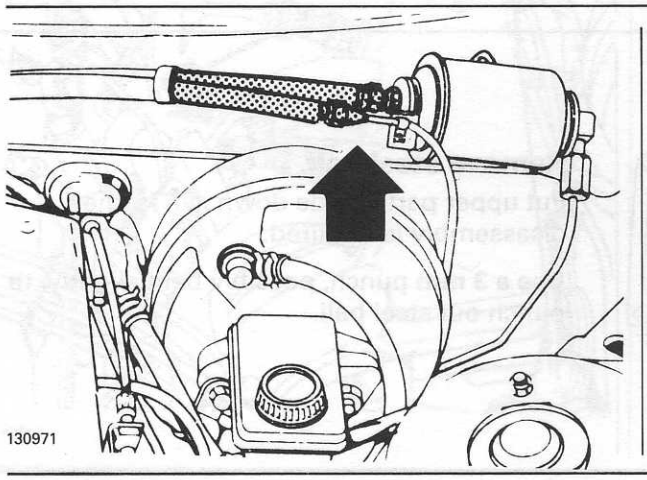
130971

A11

**Connect fuel lines.**

Connect fuel lines at fuel filter and fuel return line.

A12

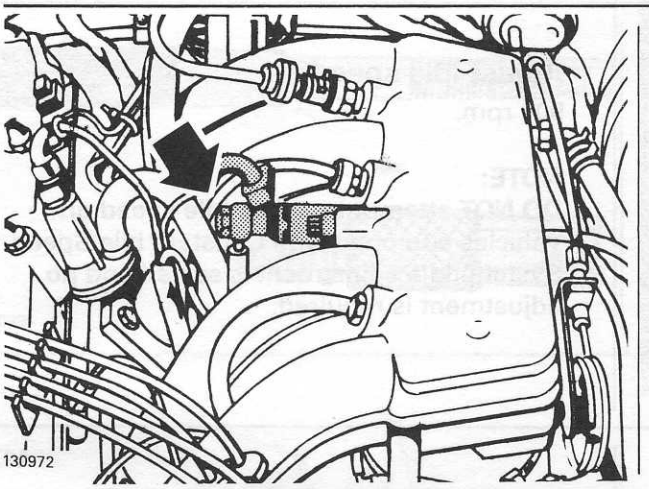
130972

**Connect fuel line.**
Connect fuel line at cold start injector.

A13

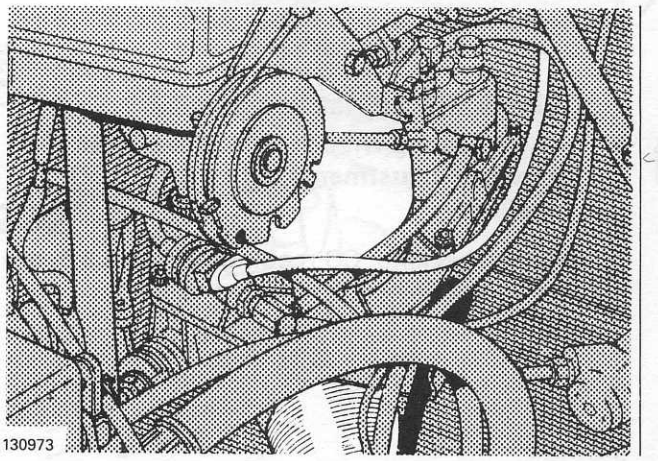
130973

**Install.**
Install rubber bellows. Connect hose from air filter. Connect connector at frequency valve.

A14

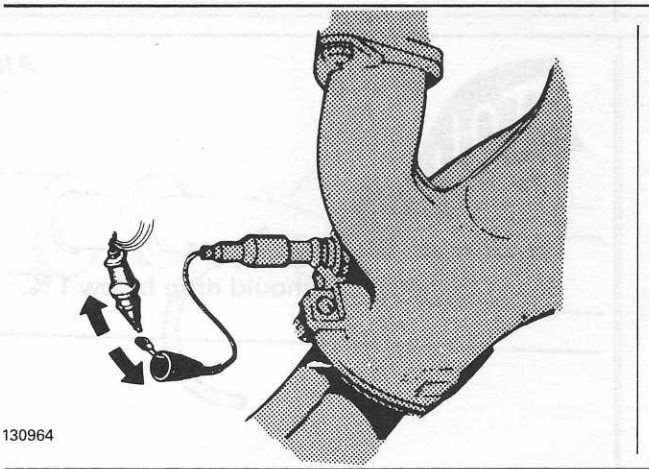
130964

**Disconnect oxygen sensor.**
Disconnect wire.

A15

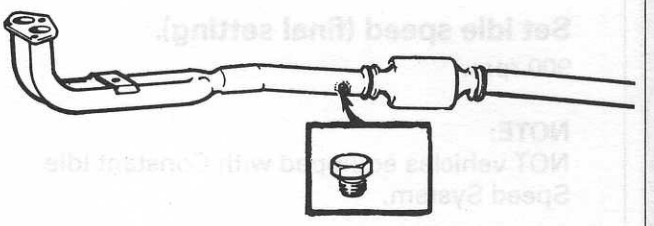
130974

**Connect CO-tester.**
Remove plug on exhaust pipe, upstream catalytic converter.

**Connect tachometer.**
**Run engine until at normal operating temperature.**

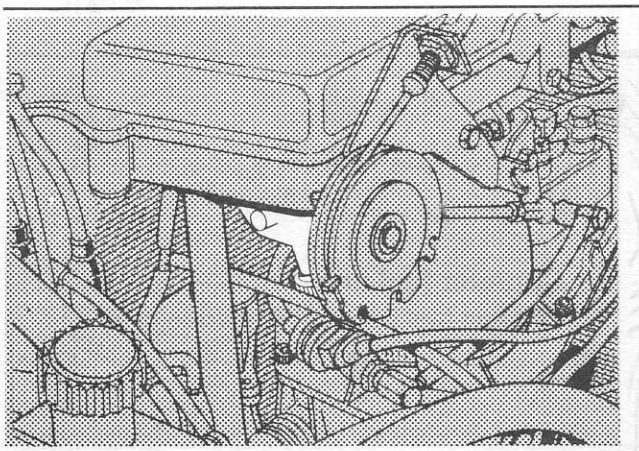

130976

*A16*

**Adjust idle speed.**
900 rpm.

**NOTE:**
**DO NOT** attempt to adjust idle speed on vehicles equipped with Constant Idle Speed System. Idle adjustment is sealed and no adjustment is required.

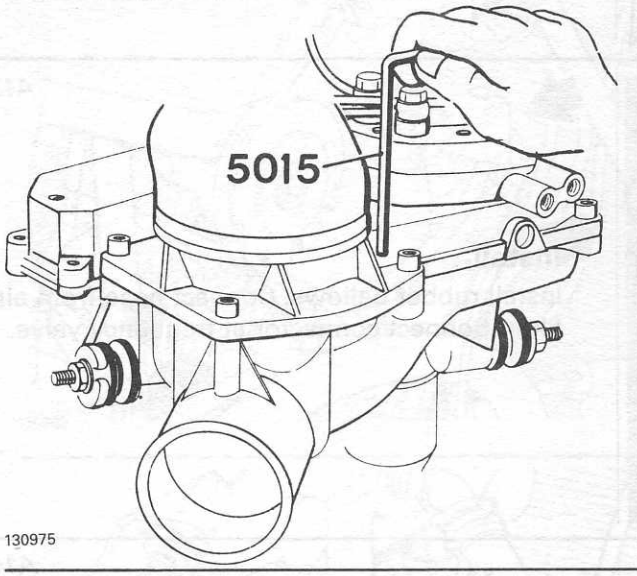


130975

*A17*

**Check CO, adjust as necessary.**
Use adjusting wrench 5015. **Cover hole between adjustments, when taking CO readings.**

When checking, CO readings of **0.7–1.3 %** are permitted. When setting, set to **1.0 %.**

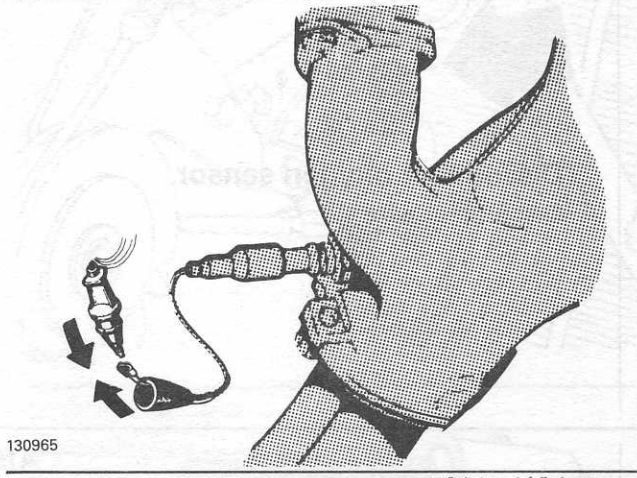

130965

*A18*

**Reconnect oxygen sensor.**
Read CO-meter. CO should drop below **1 %.**

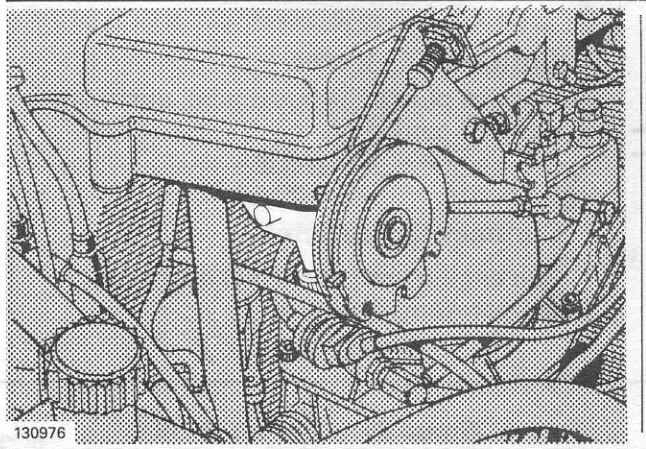

130976

*A19*

**Set idle speed (final setting).**
900 rpm.

**NOTE:**
NOT vehicles equipped with Constant Idle Speed System.

**Stop engine.**

A20

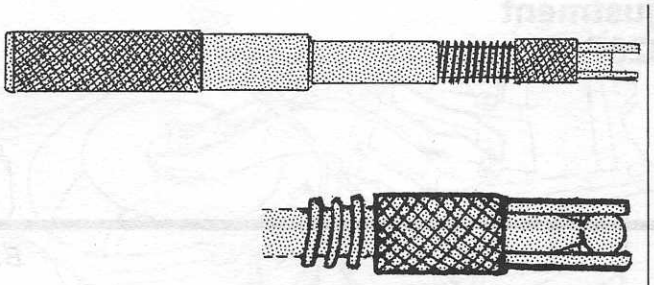

130958

**Install steel ball in tool.**
Install steel ball in tool **5232.**

A21

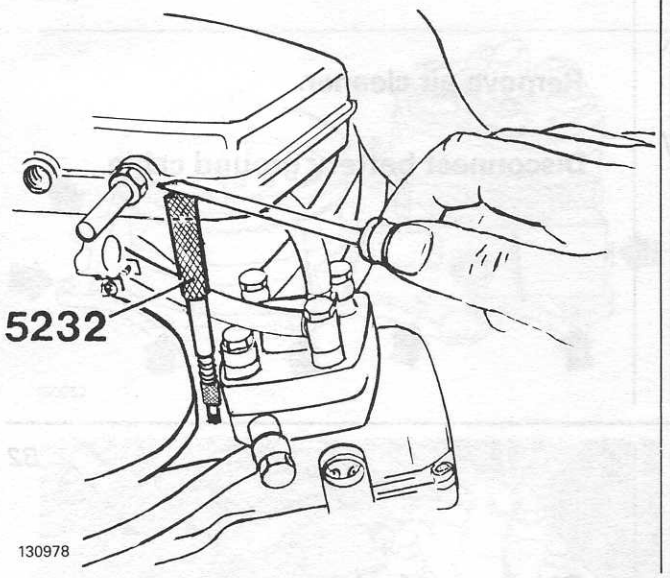


130978

**Install steel ball in air-fuel control unit.**
Tool 5232 barely fits under manifold. Use screwdriver to lever tool and steel ball into hole.

A22

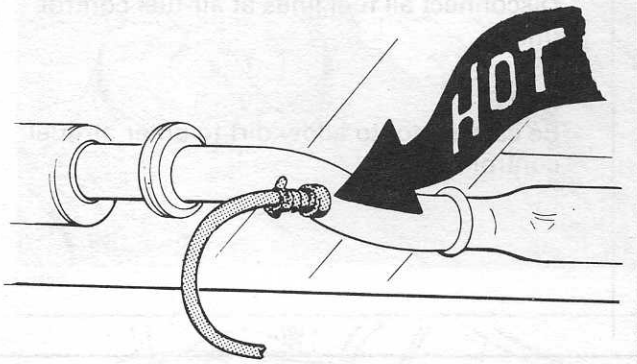


130977

**Remove instruments.**
**CAUTION:**
Connection nipples for CO are **VERY HOT.**

**Reinstall exhaust pipe plugs.**

# CO adjustment
# B28F

B1

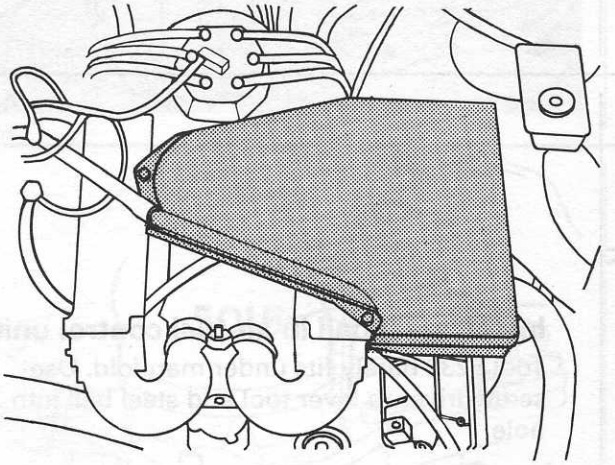

130954

**Remove air cleaner.**

**Disconnect battery ground cable.**

B2

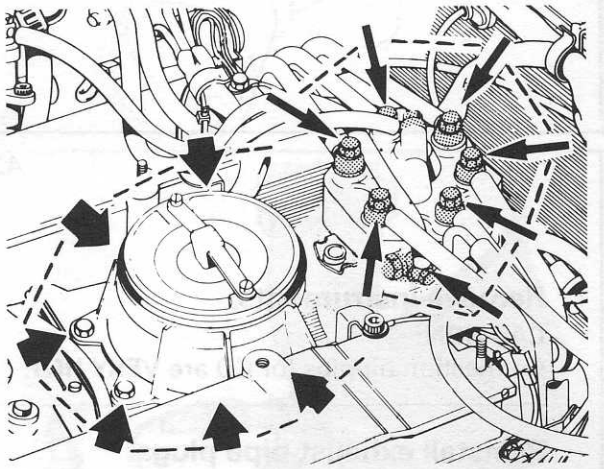

130950

**Disconnect fuel lines.**
Disconnect all fuel lines at air-fuel control unit.

**NOTE:**
Be careful not to allow dirt to enter air-fuel control unit.

B3

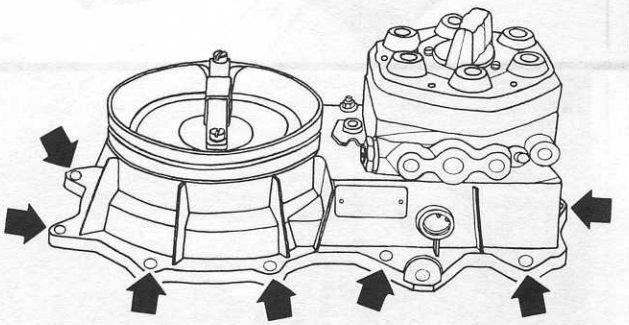

130952

**Remove air-fuel control unit.**

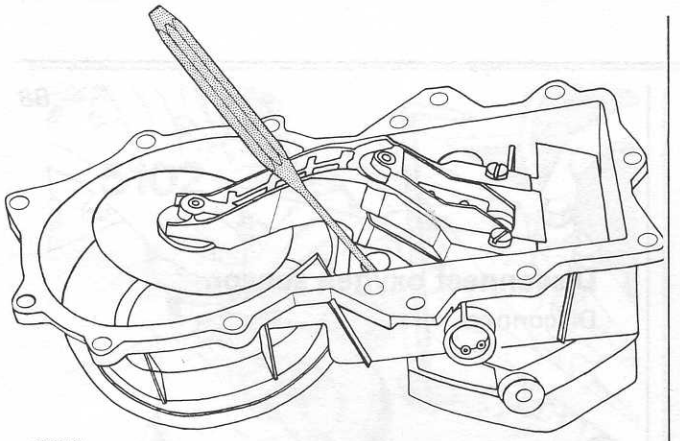

130951

*B4*

**Remove steel ball.**

Put air-fuel control unit upside down. No further disassembly is required.

Use a **3 mm** punch, possibly bent slightly, to punch out steel ball.

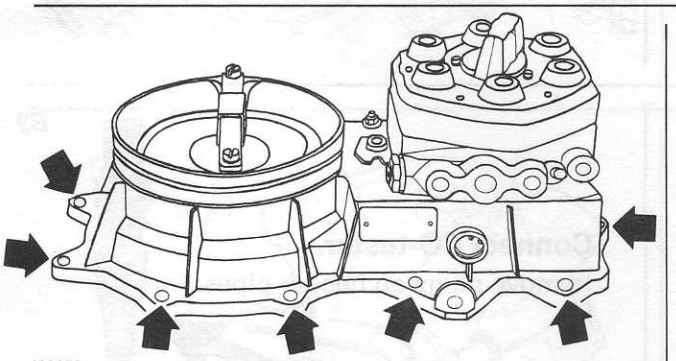

130952

*B5*

**Install air-fuel control unit.**

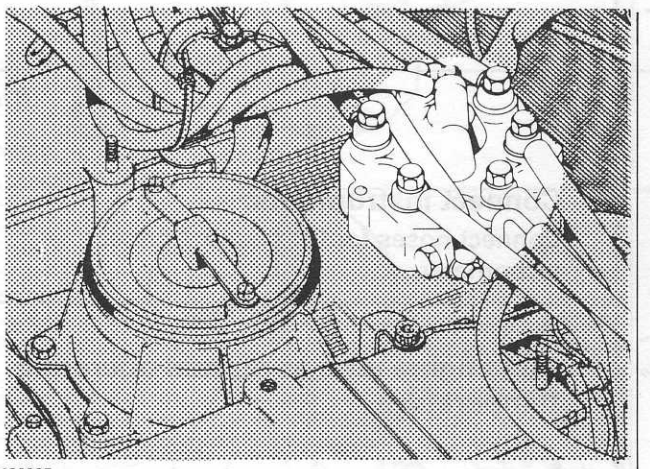

130935

*B6*

**Connect fuel lines.**

**NOTE:** copper washers for banjo type connections.

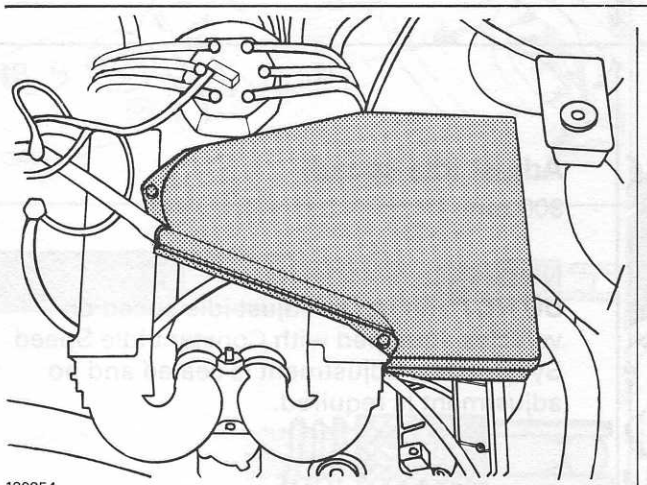

130954

*B7*

**Install air cleaner.**

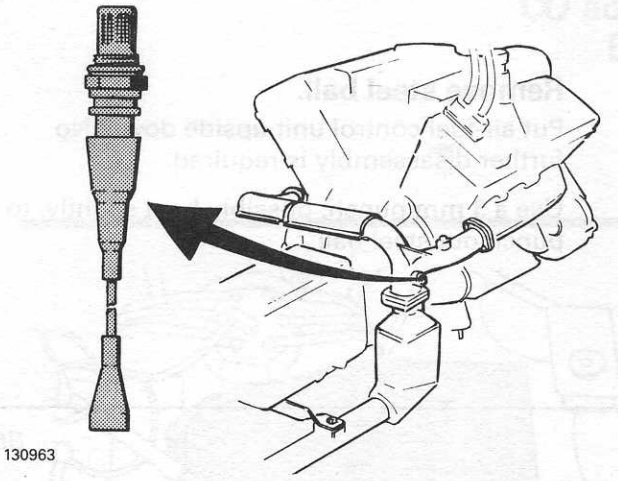
130963

*B8*

**Disconnect oxygen sensor.**
Disconnect wire.

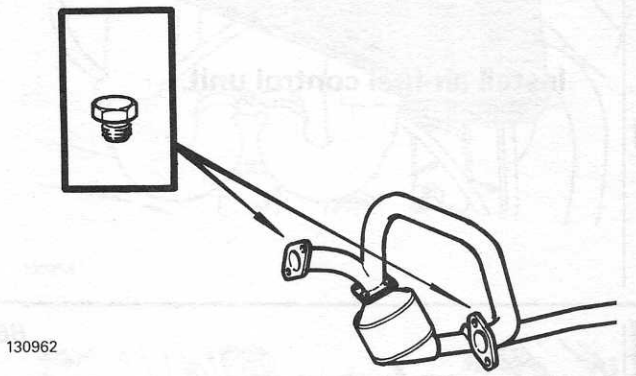
130962

*B9*

**Connect CO-tester.**
Remove plugs on header pipes.

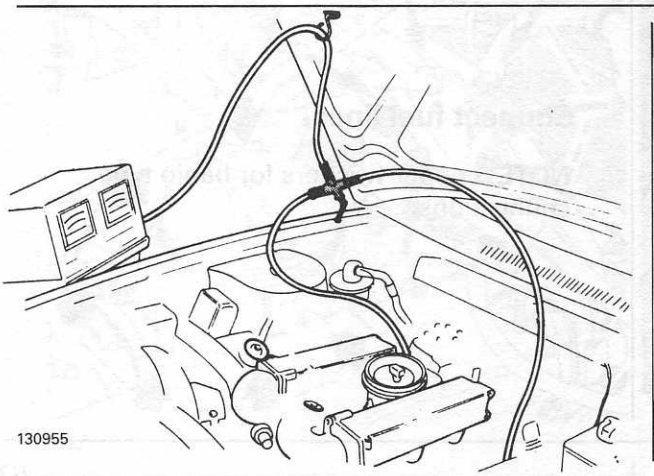
130955

*B10*

**Connect instruments.**
Connect hoses for CO gauge. Connect tachometer.

**Run engine until at normal operating temperature.**

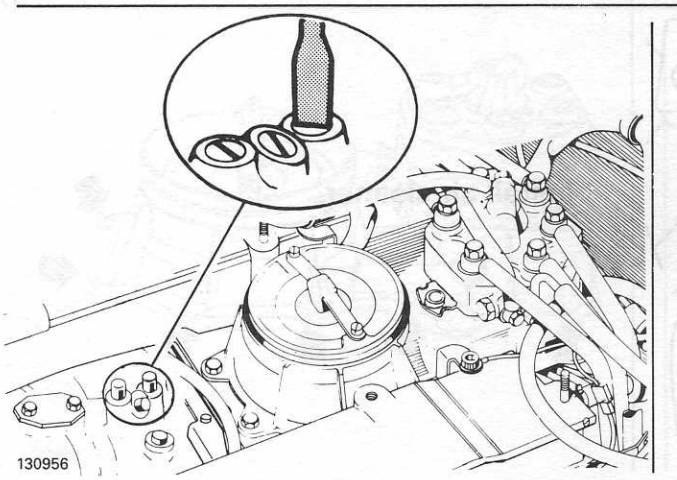
130956

*B11*

**Adjust idle speed.**
900 rpm

**NOTE:**
**DO NOT** attempt to adjust idle speed on vehicles equipped with Constant Idle Speed System. Idle adjustment is sealed and no adjustment is required.

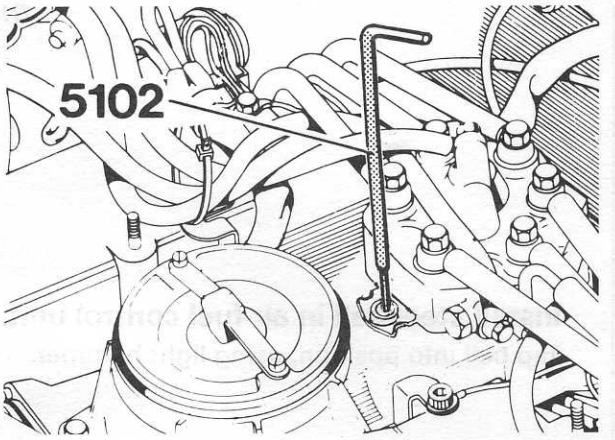


130957

B12

**Check CO, adjust as necessary.**
Use adjusting wrench 5102. Cover hole between adjustments, when taking CO readings.

When checking, CO readings **0.7–1.3 %** are permitted. When setting, set to **1.0 %.**

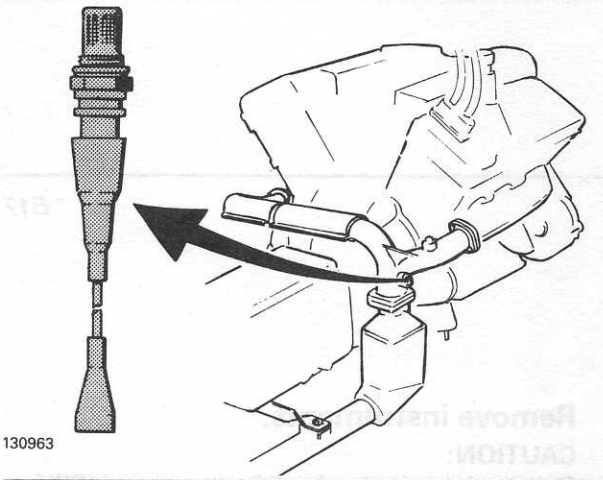

130963

B13

**Reconnect oxygen sensor.**
Read CO-meter. CO should drop below 1 %.

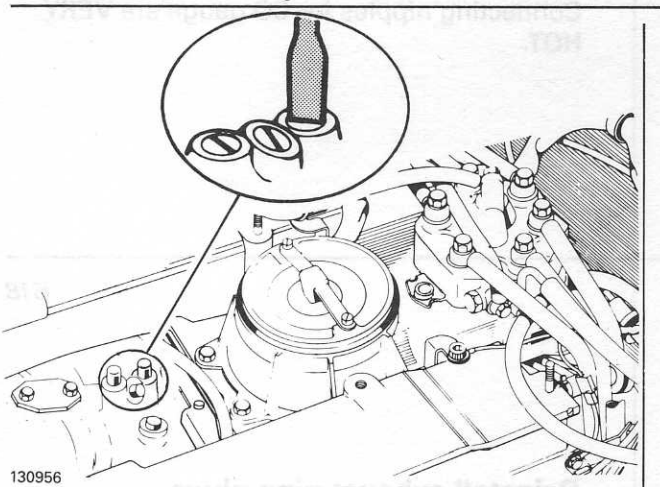

130956

B14

**Set idle speed (final setting).**
900 rpm.

**NOTE:**
NOT on engines equipped with Constant Idle Speed System.

**Stop engine.**

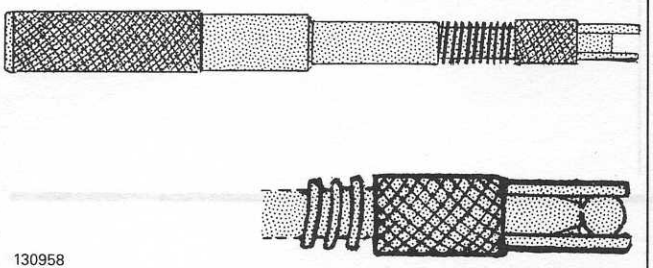

130958

B15

**Install steel ball in tool.**
Use tool **5232.**

B16

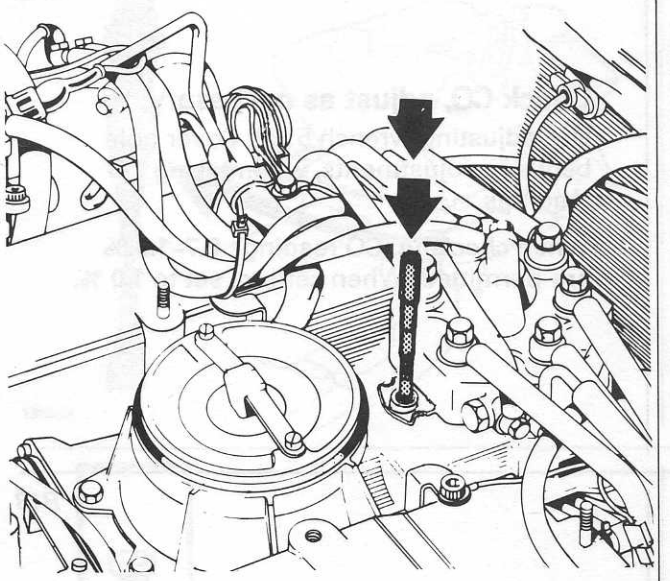

130959

**Install steel ball in air-fuel control unit.**
Tap ball into position, using light hammer.

B17

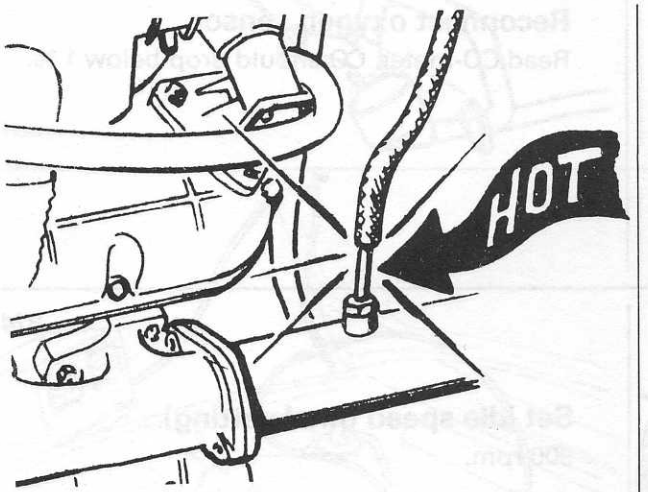


130961

**Remove instruments.**
**CAUTION:**
Connecting nipples for CO gauge are **VERY HOT.**

B18

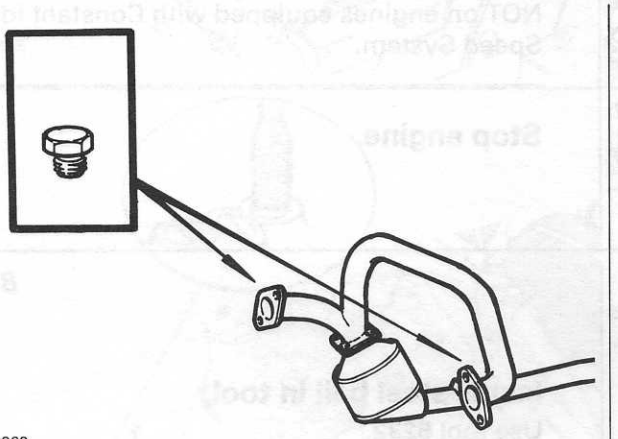

130962

**Reinstall exhaust pipe plugs.**




VOLVO SUPPORTS VOLUNTARY
MECHANIC CERTIFICATION
BY THE N.I.A.S.E.

(U.S.A. Only)

VOLVO

TP 30400/1
4500. 04. 81
Printed in U.S.A.