Service Manual

Repairs and maintenance

Section	Group
2	25

Constant Idle Speed System (CIS) 1981-

VOLVO

Contents

	Operation	Page
Introduction		1
System description		2
Specifications		4
Fault tracing CIS system		6
Basic setting of Constant Idle Speed system:		
– B21F 1981	A1–A15	14
– B21F-MPG 1981, B21F CI 1982	B1-B17	19
– B21F Turbo, 1981 —	C1-C18	25
– B21F LH-Jetronic 1982	D1-D6	31
– B28F 1981, 1982	E1-E18	33
Wiring Diagrams:		
– B21F, typical		40
– B21F LH-Jetronic		42
– B21F-Turbo		44
– B28F		46

Indicates changes in text and/or specifications in this manual.

TP 30363/2
6000.10.84
Printed in U.S.A.

© 1984, VOLVO OF AMERICA CORPORATION

We reserve the right to make alterations

Contents

	Operation	Page
Introduction		1
System description		2
Specifications		4
Fault tracing CIS system		6
Basic setting of Constant Idle Speed system:		
– B21F 1981	A1–A15	14
– B21F-MPG 1981, B21F CI 1982	B1-B17	19
– B21F Turbo, 1981 —	C1-C18	25
– B21F LH-Jetronic 1982	D1-D6	31
– B28F 1981, 1982	E1-E18	33
Wiring Diagrams:		
– B21F, typical		40
– B21F LH-Jetronic		42
– B21F-Turbo		44
– B28F		46

Indicates changes in text and/or specifications in this manual.

TP 30363/2
6000.10.84
Printed in U.S.A.

© 1984, VOLVO OF AMERICA CORPORATION

We reserve the right to make alterations

Constant Idle Speed System (CIS System)

The system is comprised of the following main components:
- Electronic Control Unit.
- Air Control Valve.
- Throttle switch.
- Coolant temperature sensor.
- Distributor (via ignition coil).

The Electronic Control Unit processes information on engine temperature, engine speed and throttle position. It controls engine at idle or near idle by regulating the Air Control Valve.

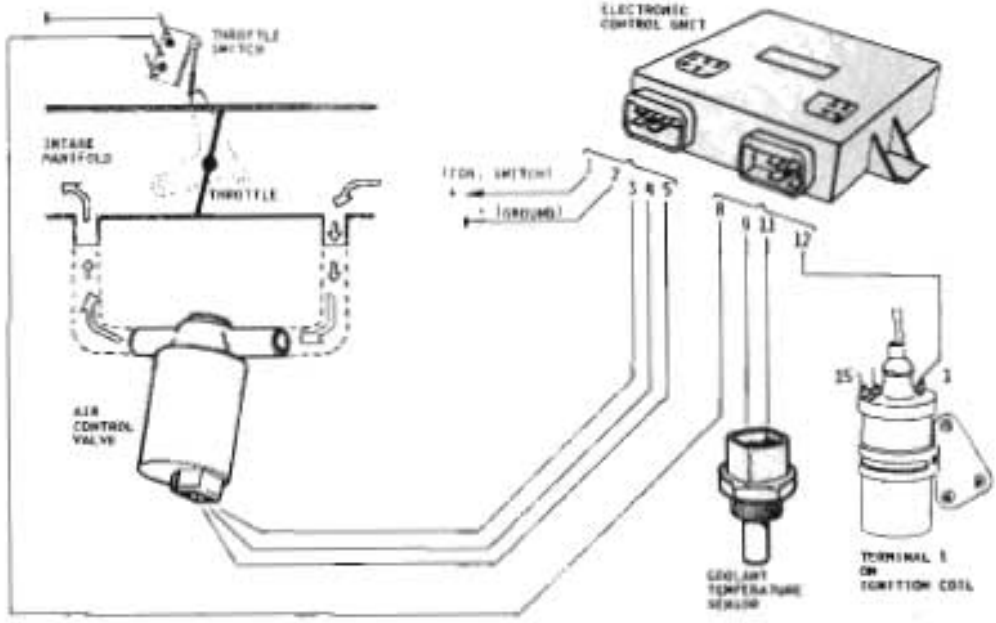

130545

Air flow modes.

As introduced in 1981, the system had three basic air flow modes:

- **Low flow** (deceleration).
  Reduced air flow occurs when the throttle switch circuit is closed during deceleration.
- **High flow** (driving).
  Increased air flow at normal driving speeds with accelerator pedal depressed.
- **Regulated flow** (idle).
  Maintains steady idle speed.

New features introduced on 1982 models:

— **Regulated flow with A/C** on (B21F-CI and B21F-LH).
When the air conditioning is switched on, a second regulated flow with increased idle speed is engaged.

— **Test point for basic idle setting**.

— **New throttle switch** (B28F).

New feature on 1983 models:

— **New air control valve.**

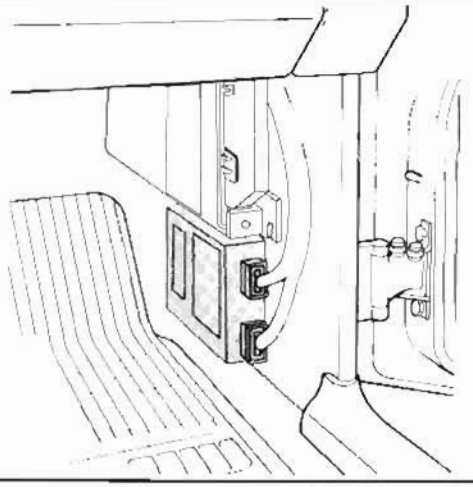
133310

Electronic Control Unit.

Receives information from three sources:
- Coolant temperature sensor gives input to provide higher idle rpm at low temperatures.
- Terminal 1 on ignition coil provides information on engine speed.
- A micro switch at the throttle provides input when the throttle control is at idle position.

The Electronic Control Unit is located below the Control Unit for the Lambda-sond system, in front of right front door.

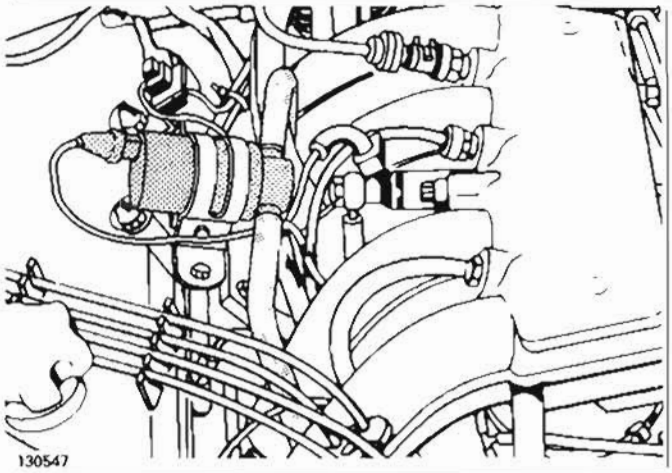
130547

Air Control Valve.

Bypasses air around the throttle valve. A small electric motor rotates clockwise or counter-clockwise, depending on signal from the Electronic Control Unit. The valve responds very quickly to obtain a precise air flow.

Left: Air Control Valve for B21F, 1981.

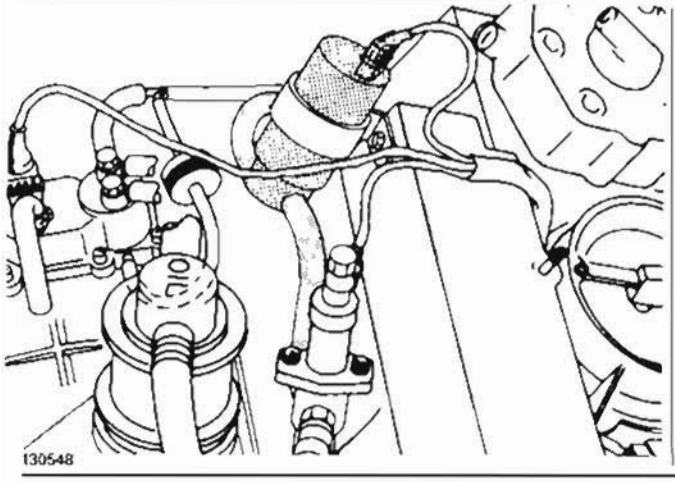
130548

Left: Air Control Valve for B28F.
- Air Control Valve for B21F-Turbo is located in front under intake manifold.

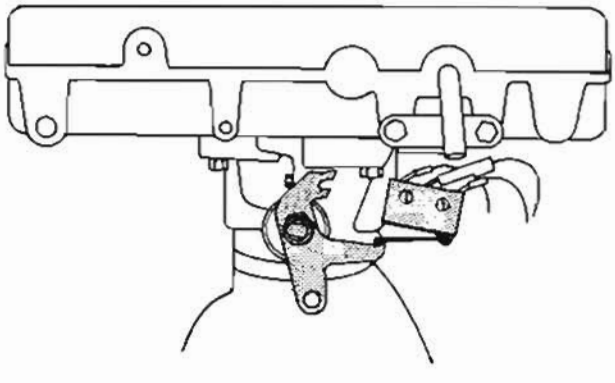
130549

Throttle switch.

The throttle actuates a micro switch which controls a circuit in the Electronic Control Unit when the throttle goes to idle position. This occurs during idle and deceleration.

For B28F 1981 it is closed at idle, for all others, 1981 and 1982, interrupted at idle.

Additional features, introduced on 1982 models:

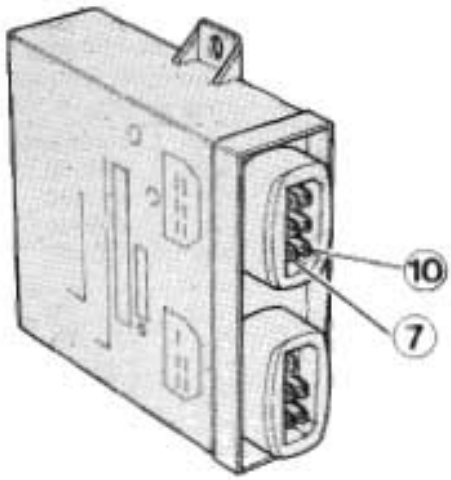

I32266

B21F CI
B21F LH-Jetronic

Electronic Control Unit for CIS (Constant Idle Speed) system.

The Electronic Control Unit automatically increases engine rpm when the air conditioning is operating.
The Electronic Control Unit has two extra terminals, 7 and 10. For basic idle mode terminal 10 is grounded. When air conditioning is switched on, a micro switch in the air conditioning control energizes terminal 7. This will change the operating mode of the Electronic Control Unit and set a higher idle rpm. This provides improved air conditioning operation and also improved cooling due to faster running coolant pump and fan.

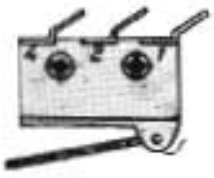

B28F
Throttle Switch
New throttle switch; same as on 4-cyl. Infinite resistance in idle position.

Electronic Control Unit

New control unit with test terminal for basic idle mode. Reversed input from the throttle switch (as compared with previous unit).

Modification introduced on 1983 models:

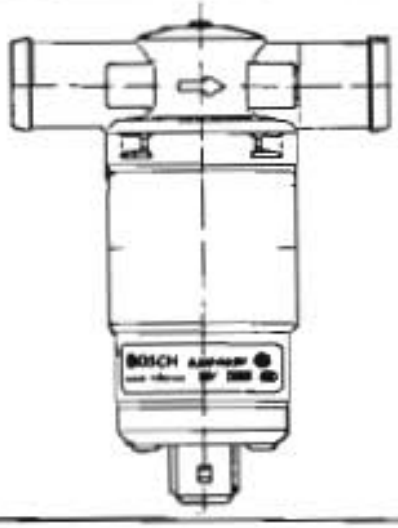

B21FT

New, smaller air control valve.

Specifications

Idle speeds

	Basic setting, Electronic Control Unit de-activated		*Normal running, Electronic Control Unit activated*	
1981 models:	*rpm*	*lower/upper limit*	*rpm*	*lower/upper limit*
B21F	850	800/850	900	850/950
B21F-MPG	700	700/750	750	700/800
B21F-Turbo	850	850/900	900	850/950
B28F	850	850/900	900	850/950
1982 models				
B21F CI	700	700/750	750	730/770
B21F LH-Jetronic	700	700/750	750	730/770
B21F-Turbo (inc. intercooled)	850	850/900	900	880/920
B28F	850	850/900	900	880/920

On B21F CI and B21F LH-Jetronic with idle speed 750 rpm, idle speed increases to 900 rpm when AC is switched on.

Component identification numbers

		Electronic Control Unit	*Coolant temperature sensor*	*Air control valve*
1981 models				
B21F, California	Volvo P/N	1276897-4	1306024-9	1276871-9
Engine identification numbers	Bosch No.	0 280 220 003	0 280 130 028	0 280 140 500
498892 and 498893.	Color point	Green		
B21F-MPG	Volvo P/N	1306544-6	1306024-0	1276871-9
Engine identification numbers	Bosch No.	0 280 220 002	0 280 130 028	0 280 140 500
498896 and 498897.	Color point	White		
B21F-Turbo	Volvo P/N	1276897-4	1306024-9	1276871-9
Engine identification number	Bosch No.	0 280 220 003	0 280 130 028	0 280 140 500
498898 (manual trans. only).	Color point	Green		
B28F, California	Volvo P/N	1274293-8	1306024-9	1276871-9
Engine identification numbers	Bosch No.	0 280 220 001	0 280 130 028	0 280 140 500
498638 and 498639.	Color point	Yellow		
1982 models				
B21F CI	Volvo P/N	1317499-0	1306937-2	1276871-9
Engine identification numbers	Bosch No.	0 280 220 005	0 280 130 023	0 280 140 500
498960 and 498961.	Color point	Orange		
B21F LH-Jetronic	Volvo P/N	1317499-0	1306937-2	1276871-9
Engine identification numbers	Bosch No.	0 280 220 005	0 280 130 023	0 280 140 500
498962 and 498963.	Color point	Orange		
B21F-Turbo	Volvo P/N	1317499-0	1306937-2	1276871-9
Engine identification numbers	Bosch No.	0 280 220 005	0 280 130 023	0 280 140 500
498966 and 498967.	Color point	Orange		
B28F	Volvo P/N	1274452-0	1306024-9	1276871-9
Engine identification number	Bosch No.	0 280 220 008	0 280 130 028	0 280 140 500
498667 (auto trans. only).	Color point	Gray		
1983, 1984 models				
B21F-Turbo	Volvo P/N	1317499	1306937-2	1316957-7
Engine identification numbers	Bosch No.	0 280 220 005	0 280 130 023	0 280 140 501
499800 and 499801 (1983)	Color point	Orange		
499868 and 499869 (1984)				
B21F-Turbo Intercooler	Volvo P/N	1317499	1306937-2	1317957-7
Engine identification numbers	Bosch No.	0 280 220 005	0 280 130 023	0 280 140 501
499926 and 499927	Color point	Orange		

Resistance/temperature specification

Coolant temperature sensor.

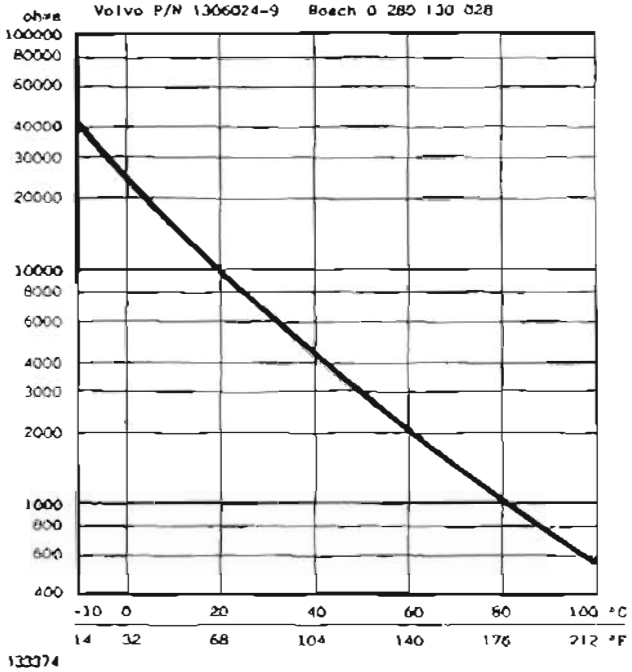

Volvo P/N	1306024-9
Bosch No	0 280 130 028
B21F, all	1981
B28F	1981 and 1982

Suggested test values:

−10°C=14°F	32000–53000 ohms
+20°C=68°F	8500–11500 ohms
+80°C=176°	770–1320 ohms

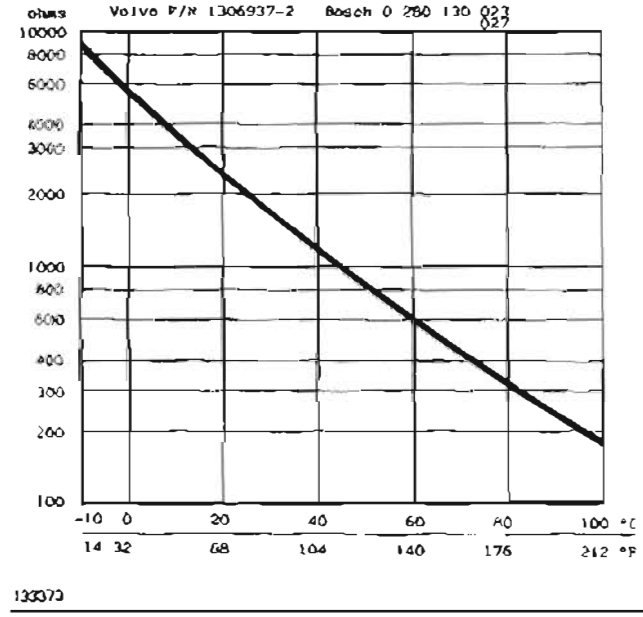

Volvo P/N	1306937-2
Bosch No	0 280 130 023
B21F, B21FT all	1982—

Suggested test values:

−10°C=14°F	7000–11600 ohms
+20°C=68°F	2100–2900 ohms
+80°C=176°F	270–390 ohms

Faults in CIS system

It is advisable to eliminate other systems as fault source prior to fault tracing the CIS system.

The reference list below may be helpful in finding possible reasons for an incorrect idle speed.

Simple reference list of symptoms and possible reasons

Symptom:	Possible reasons:
Idle varies up and down, more than ±50 rpm for 1981 models, more than ±20 rpm for 1982 models.	– CO adjustment incorrect. – Ignition timing incorrect. – Throttle butterfly valve incorrectly adjusted. – Electronic Control Unit faulty. – Air control valve faulty. – Air leakage.
Idle speed too high.	– Low basic idle speed. – Air control valve sticks. – Throttle switch incorrectly adjusted. – Temperature sensor faulty or not connected.
No idle speed control.	– Throttle butterfly valve incorrectly adjusted. – Bad contact in connector. – Throttle switch incorrectly adjusted. – Electronic Control Unit faulty. – Air control valve faulty.
Engine stalls when braking to stop.	– CO adjustment incorrect. – Ignition timing incorrect. – Throttle butterfly valve incorrectly adjusted. – Faulty contact in connector. – Electronic Control Unit faulty. – Low basic idle speed.
No high idle speed when cold.	– Air control valve sticks. – Electronic Control Unit faulty. – Air control valve faulty. – Coolant temperature sensor faulty.

Fault tracing CIS system

1

IMPORTANT!
These fault tracing procedures assume that the engine itself is in good operating condition and that ignition timing is correctly adjusted. Test only with engine at normal operating temperature. Engine OFF when disconnecting connectors.

Check wires and connectors.
This is a very important part of the fault tracing procedures. Bad contacts cause many problems.
Operations/illustrations a-m below will underscore this importance and at the same time show various connectors.

Electronic control unit connectors

a



Check connectors at Electronic Control Unit.
Remove panel in front of right front door to gain access to the unit.

b



Blue connector at top and black connector at bottom.

Firewall connectors

c

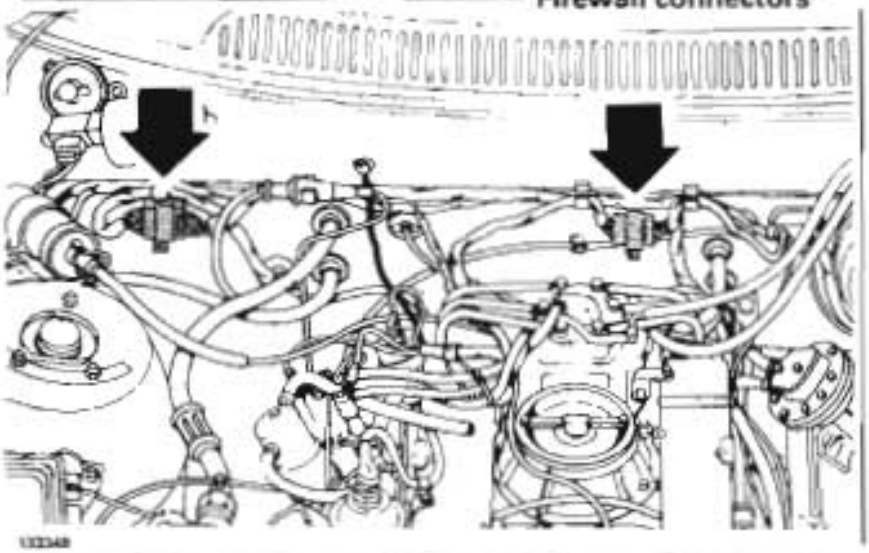

Connectors on firewall.
There are **two** connectors on firewall.
(This illustration shows 828F, but is typical for all models).

d

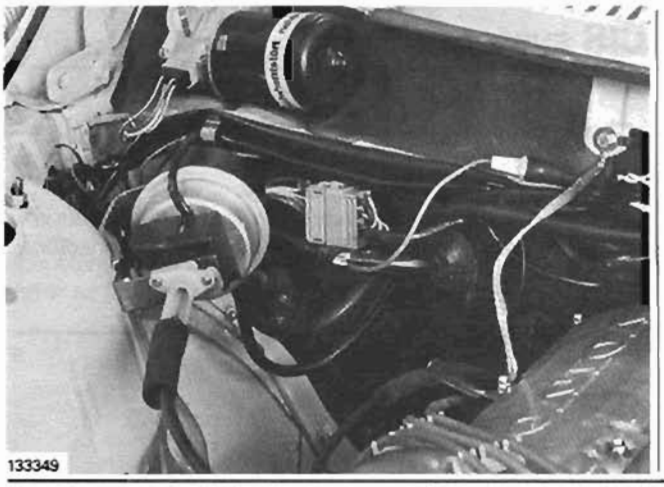

Connector on firewall.
This illustration is typical for all engines, all cars.
(Shows B21F LH-jetronic with cruise control.)

e

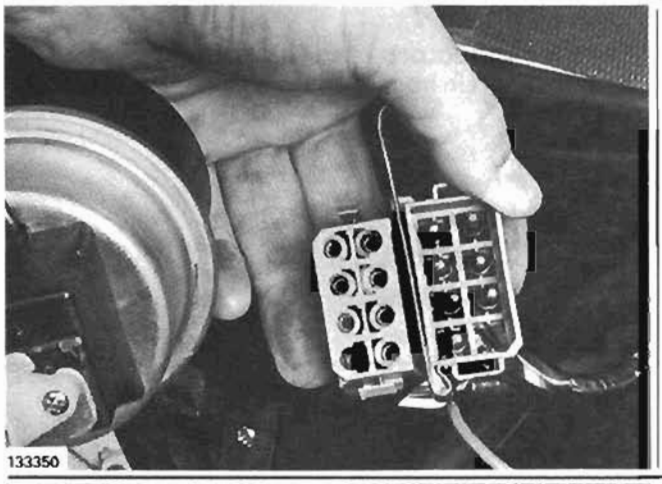

Firewall connector disconnected.

f

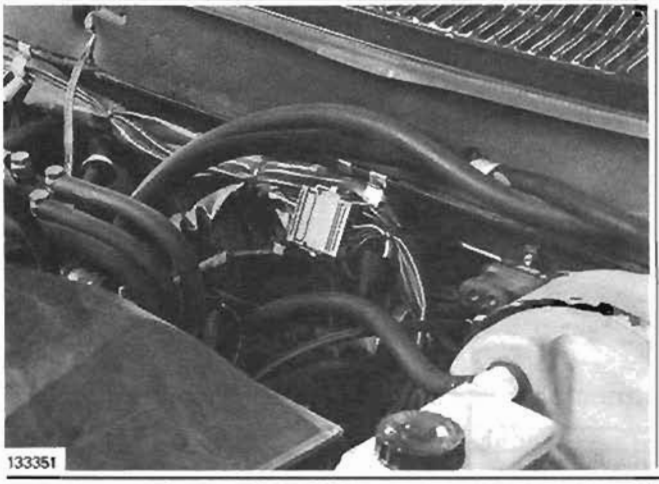

Firewall connector, B28F.

g

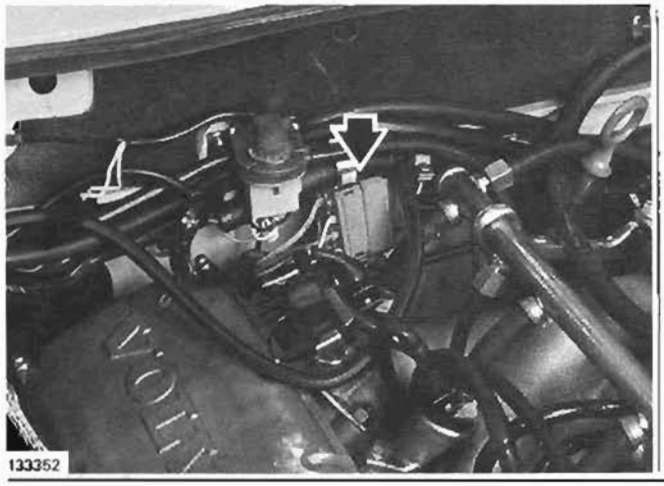

The other firewall connector.
Typical location, also applicable to B28F.

Air control valve connectors

h

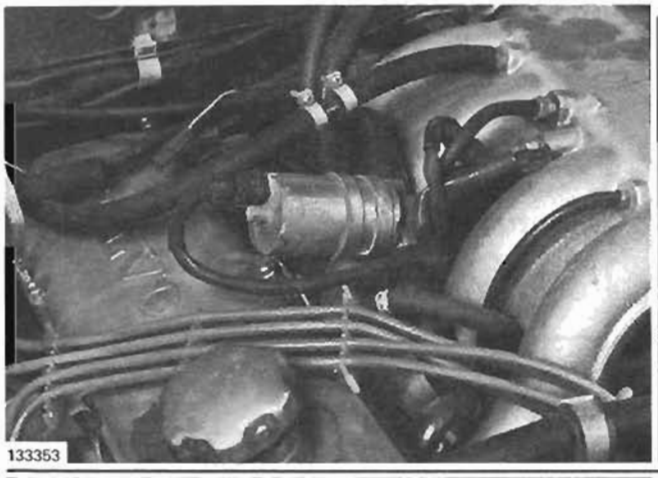

Air control valve, B21F 1982.

i

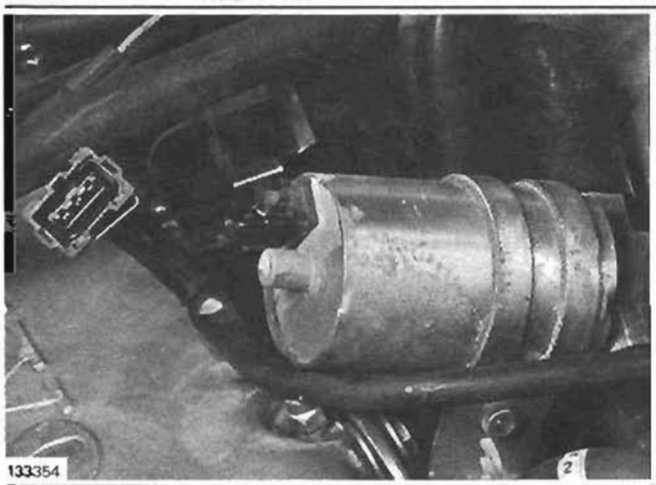

Connector disconnected.

j

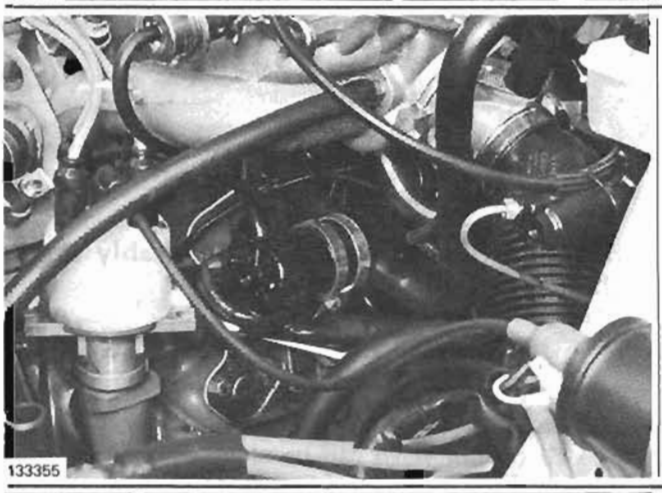

Air control valve, B21F LH-Jetronic 1982.

k

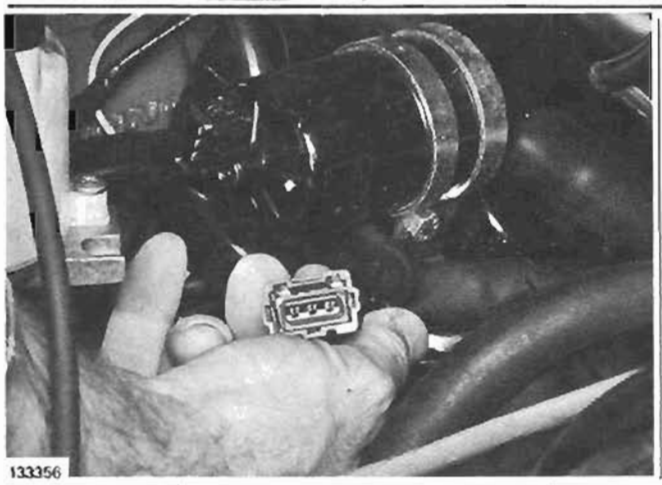

Connector disconnected.

l

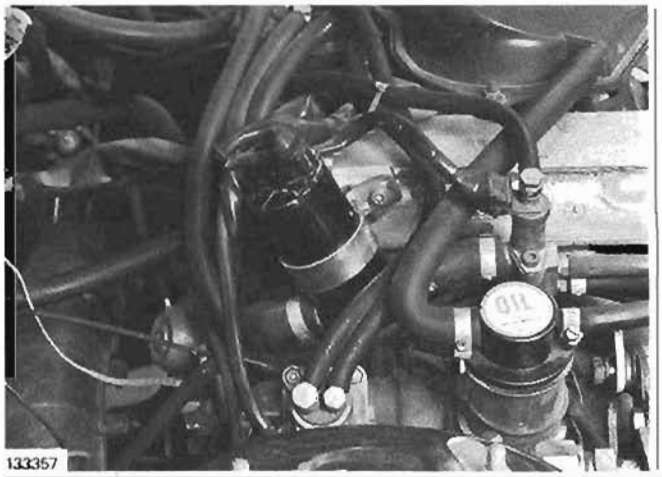

Air control valve, B28F.

m

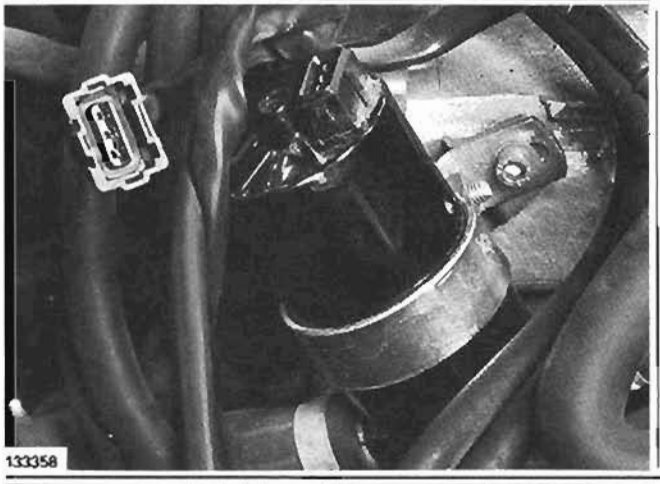

Connector disconnected.

2

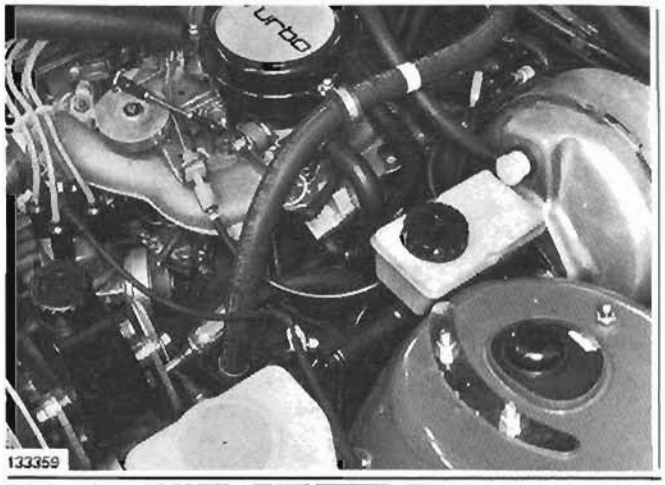

If engine idle speed is considerably lower than specified:
Check air hoses for obstructions.

The air control valve can be stuck or obstructed by deposits from the Positive Crankcase Ventilation (PCV) system.
Check oil replacement intervals and engine oil quality. Clean PCV system.

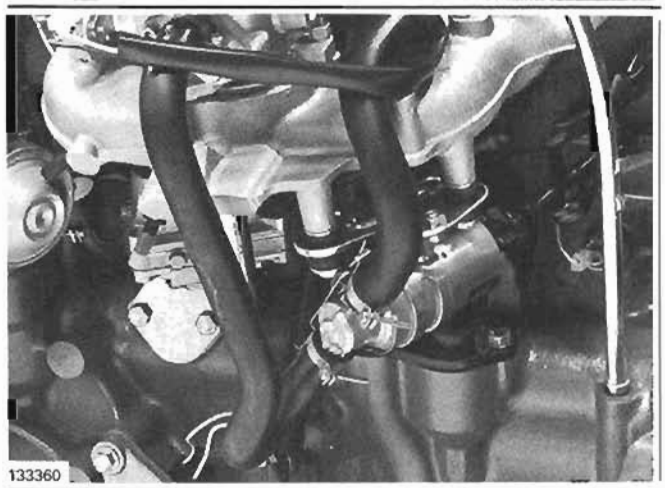

Photos show B21F-Turbo. Note two clamps and strip between them.

Testing CIS system

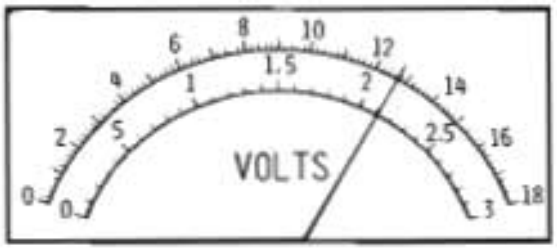

133358

For the tests it is advised to use a high quality voltmeter, metering range 0 to approx. 15–20 volts.
For the resistance tests, an ohmmeter with a range of 100 to 10,000 ohms is needed.

Most common faults are bad connections in the multipin connectors on firewall, at the Electronic Control Unit and at the Coolant Temperature Sensor. System voltage and currents are low.

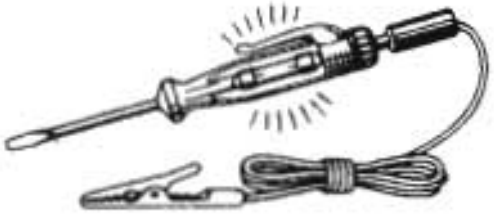

133428

In some tests below, it is suggested an alternate testing method, using a test lamp. It uses more current than a voltmeter or ohmmeter and might in some cases reveal a bad connection better.

WARNING:
In any test, DO NOT press in the test point between the terminal contacts, just TOUCH. Otherwise terminal contacts may be permanently damaged.

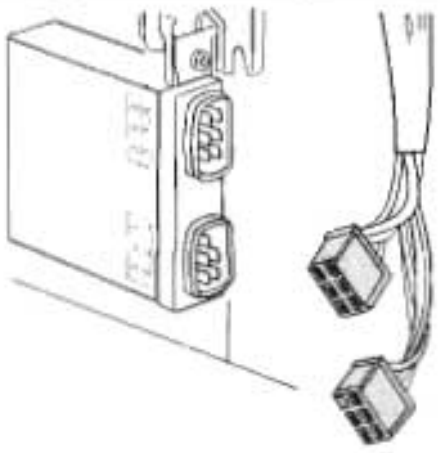

133361

3

Prepare for test.
Remove panel in front of right front door.
Disconnect both connectors at the Electronic Control Unit.

Switch ignition ON.

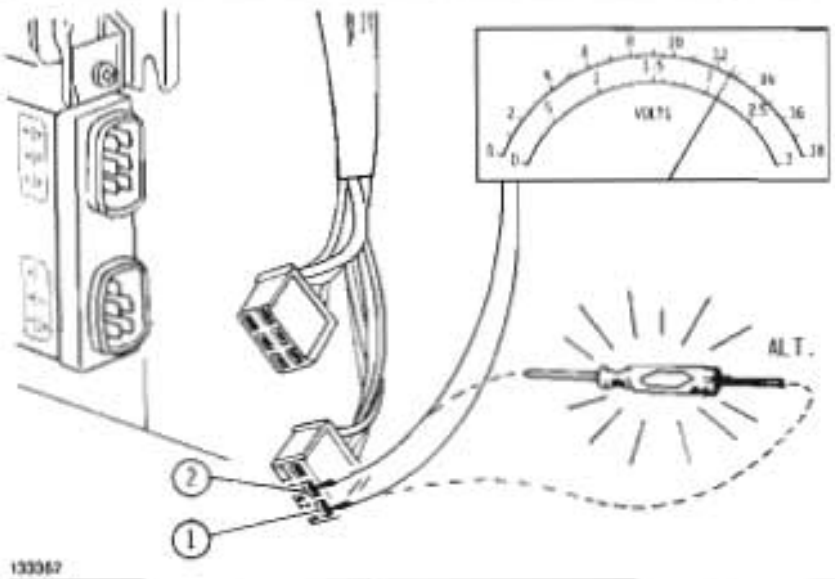

133362

4

Black connector

Check current supply.
Ignition ON.
Terminal 1 is positive (+) energized from ignition switch. Terminal 2 is negative (ground). Connect voltmeter (alt. test lamp) across terminals 1 and 2 in connector. Voltmeter should read battery voltage (test lamp illuminate fully).

No reading: first check alternate ground, then check fuse No. 13.

5

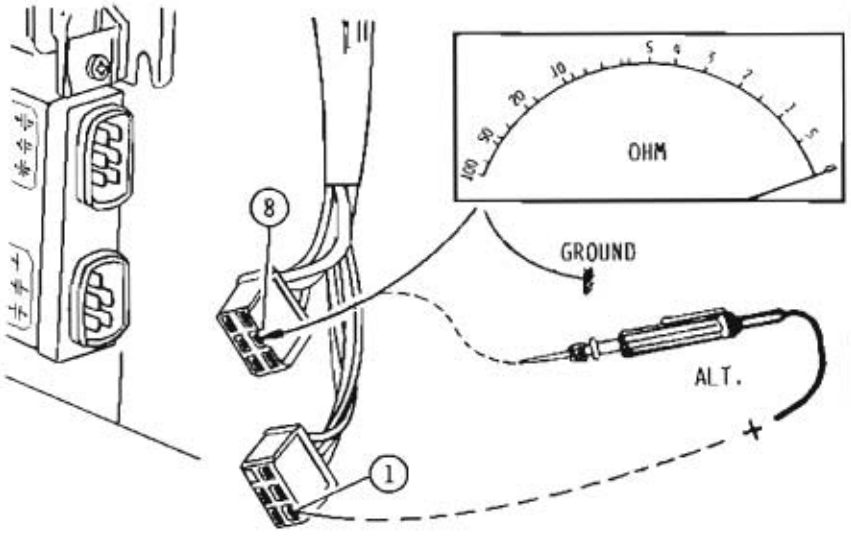

133363

Check throttle switch (micro switch).

Ohmmeter: ignition can be OFF. Connect ohmmeter test leads across terminal 8 (blue connector) and ground.

Test lamp: ignition ON. Connect leads to terminal 8 (blue connector) and terminal 1 (black connector).

6

Throttle pedal NOT depressed (idle position).

1981 models:		
B21F, all	infinite resistance	test lamp NOT illuminated
B28F	zero resistance	test lamp illuminated
1982 models—:		
B21F, all	infinite resistance	test lamp NOT illuminated
B28F	infinite resistance	test lamp NOT illuminated

Throttle pedal depressed (above idle position).

1981 models		
B21F, all	zero resistance	test lamp illuminated
B28F	infinite resistance	test lamp NOT illuminated
1982 models—:		
B21F, all	zero resistance	test lamp illuminated
B28F	zero resistance	test lamp illuminated

Incorrect readings: adjust according to instructions in this manual.

7

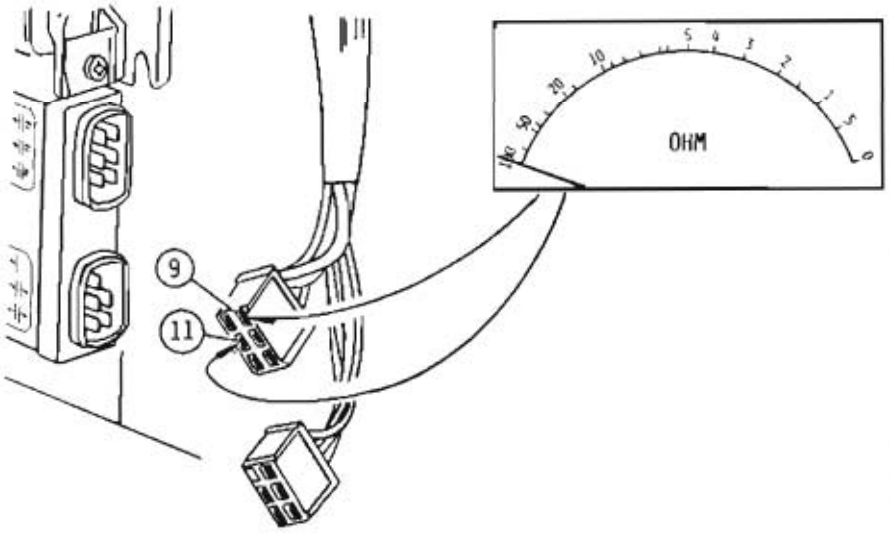

133364

Check coolant temperature sensor.

Use ohmmeter to test coolant temperature sensor resistance. Connnect across terminals 9 and 11.

See graphs in "Specifications" section, showing relations resistance/temperature.

8

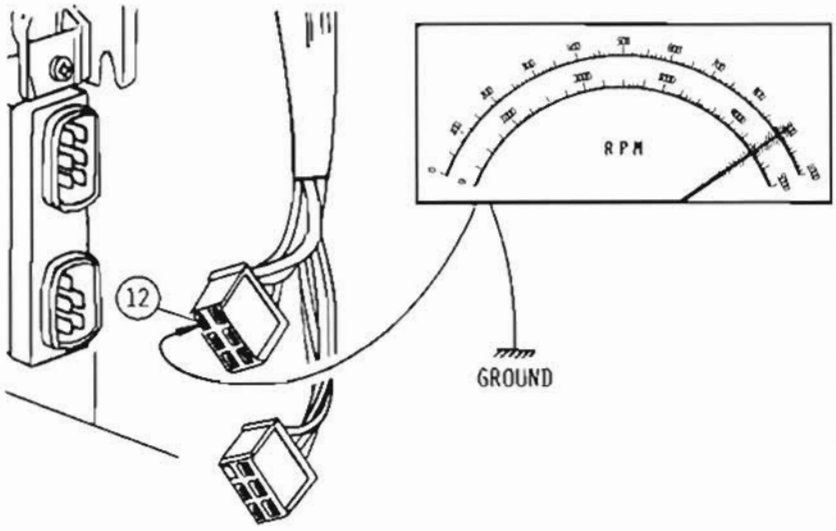

133365

Check signal from ignition system.
Connect tachometer across terminal 12 and ground. Start engine. Tachometer should show engine speed.

Incorrect or no reading:
Check connectors on firewall, see first operation of these fault tracing procedures.

9

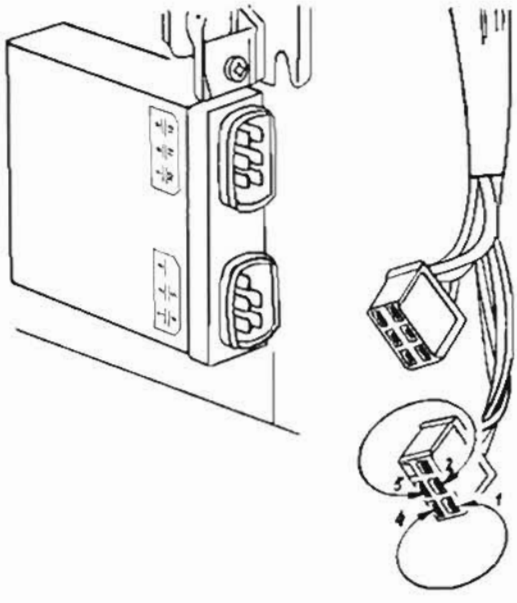

133366

Check air control valve.
Prepare and connect jumper wire across terminals 4 and 1. Connect another jumper wire across terminals 5 and 2.

Start engine.
Engine should obtain a high idle speed of 1600–2400 rpm, indicating that the air control valve is in order.

10

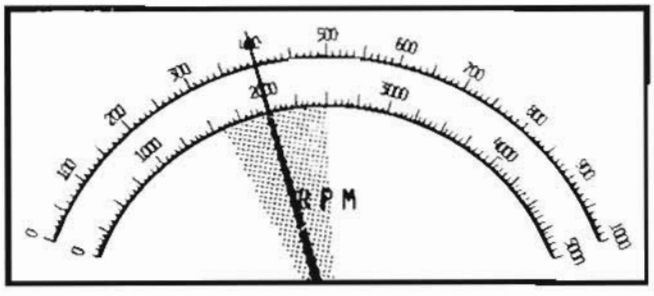

133367

Engine does NOT obtain that high idle speed:
Indicates that the air control valve is defective.

No fault is found:
Try a new Electronic Control Unit.

Check operation.
Reconnect connectors. Make sure all connections are in order. Check for proper operation.

Basic setting of Constant Idle Speed System B21F 1981

Engine Identification Number (EIN):
498892 manual transmission
498893 automatic transmission

A1

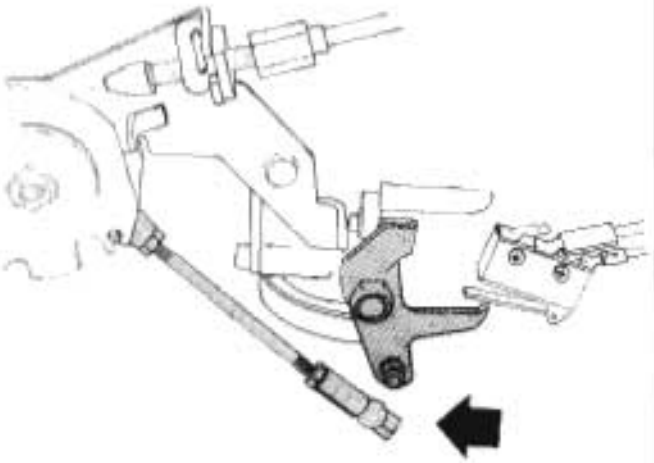

130858

Disconnect throttle control rod.
At lever.

Check cable assembly.
Make sure cable and pulley run smoothly and do not bind in any position.

A2



133310

Remove panel in front of right front door.
Electronic Control Unit for Constant Idle Speed System is located below Electronic Control Unit for Lambda-sond system.

A3

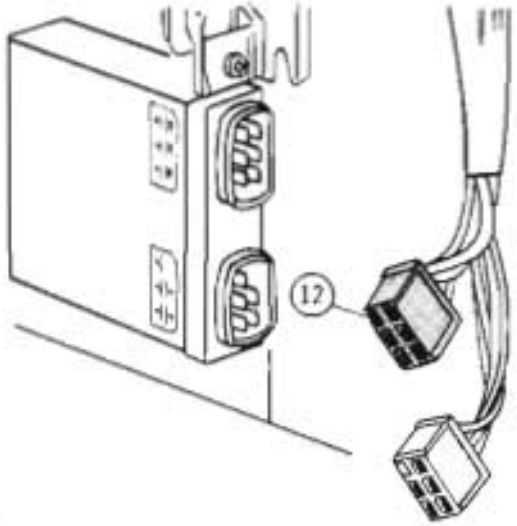

133381

De-activate Electronic Control Unit.
Disconnect white-red wire from terminal 12 of blue connector plug at Electronic Control Unit.
Reinstall connector plug.

NOTE:
Same wire ends at ignition coil but cannot be disconnected there.

A4

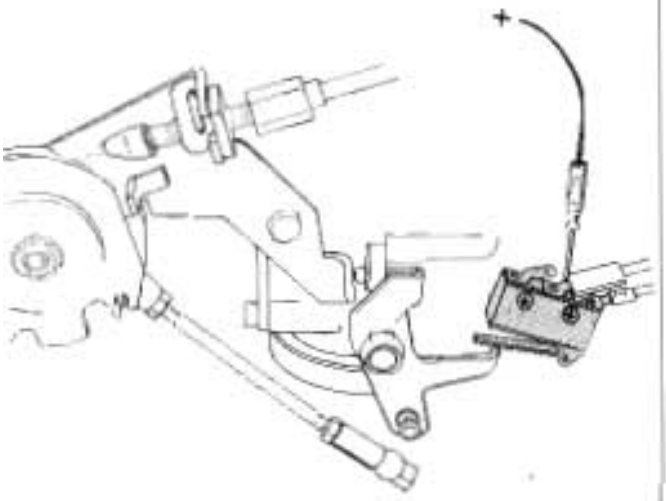

130861

Connect tachometer.
Good instrument to accurately measure engine RPM.

Connect test lamp.
Connect across battery plus terminal and terminal on micro switch with yellow wire connected.

Start engine.
Should be at normal operating temperature.

A5

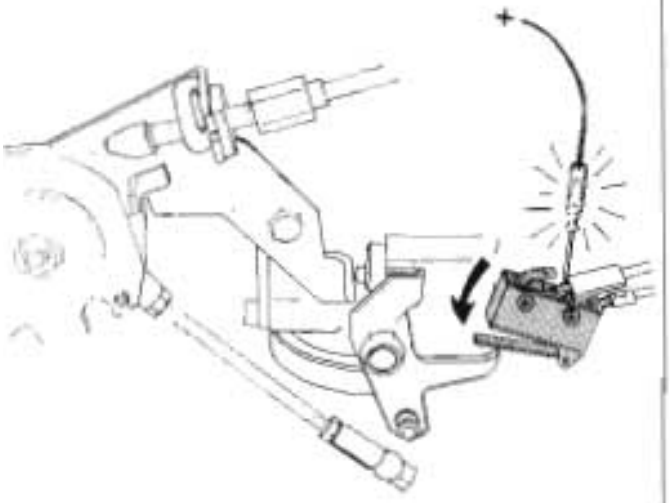

130862

Test light OUT.
Test light **MUST NOT** illuminate at idle speed.

If test light illuminates:
adjust micro switch position.
Slacken micro switch retaining screws. Move micro switch **DOWN** until test light goes out. Tighten retaining screws.

This is a temporary adjustment. Final adjustment will follow later on.

A6

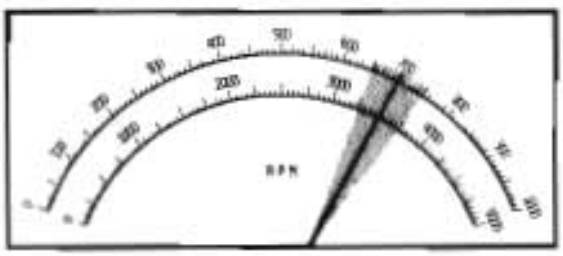

130882

Idle speed.
Idle speed should be:
850 rpm
(850–900 rpm permitted)

If outside these limits, idle speed should be adjusted. See operations A7–A9.

If inside, continue to A10.

Adjusting idle speed

A7

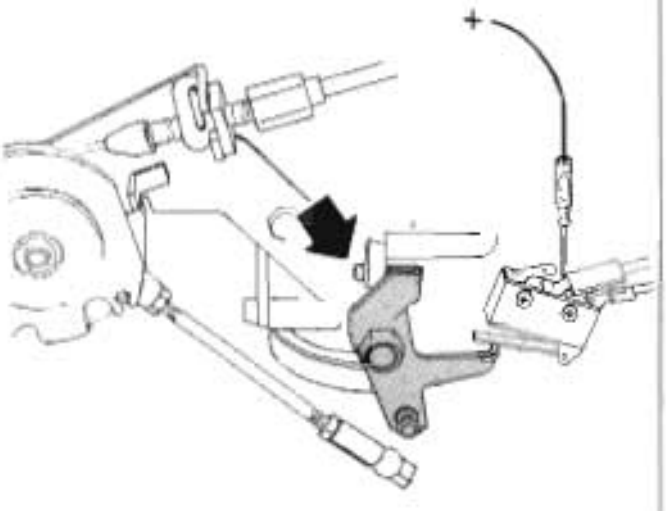

130864

Idle speed NOT 850 rpm (850–900 rpm permitted):
Use throttle position adjustment screw to adjust idle speed to 850 rpm (850–900 rpm permitted).

NOTE:
Test light MUST NOT illuminate. If necessary, readjust micro switch position.

A8

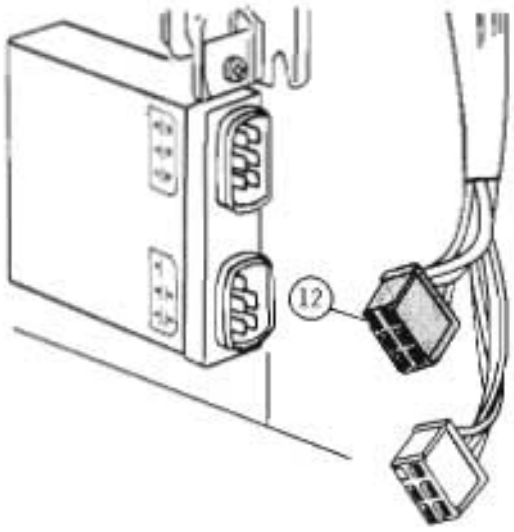

133381

Activate Electronic Control Unit.
Reconnect white-red wire in terminal 12 of blue connector plug at Electronic Control Unit.

A9

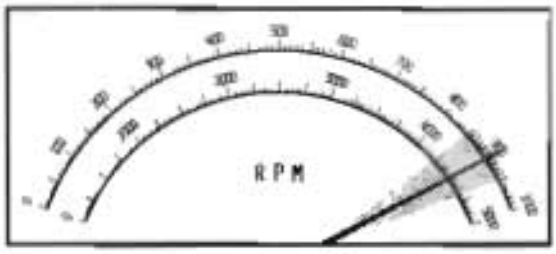

133389

Idle speed change.
After activating Electronic Control Unit, idle speed should change to 900 rpm (850–950 rpm permitted).

Stop engine.

A10

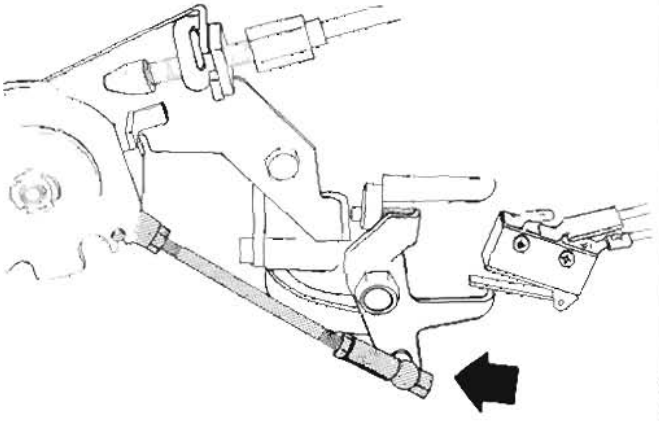

130866

Reconnect throttle control rod at lever.
Cable pulley should be completely retracted.

If adjustments of engine controls must be made, follow operations A11–A13 below.

Adjusting controls

A11

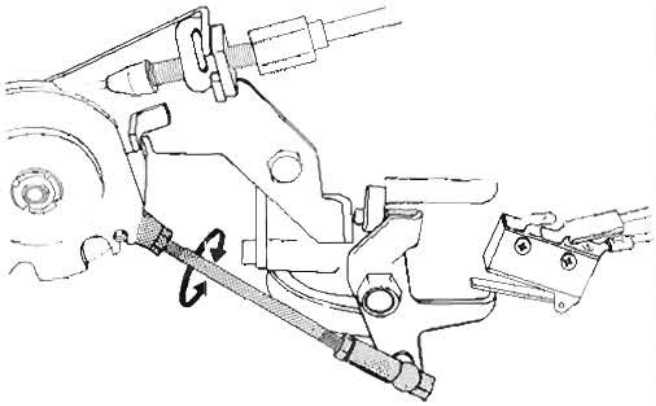

130867

Adjust control rod length.
Disconnect throttle cable and automatic transmission kickdown cable.
Adjust control rod length as necessary.

A12

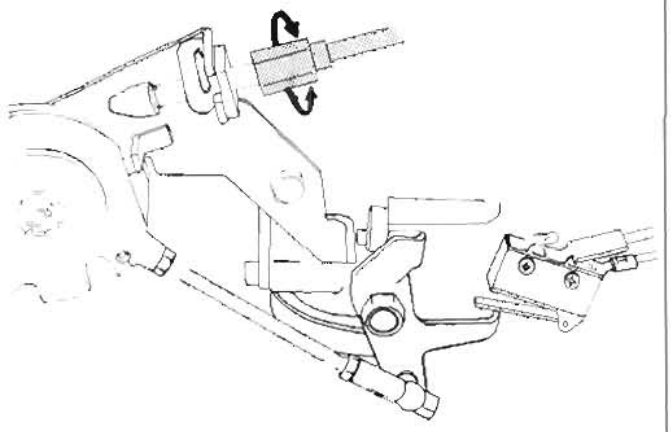

130868

Attach and adjust throttle cable.

A13

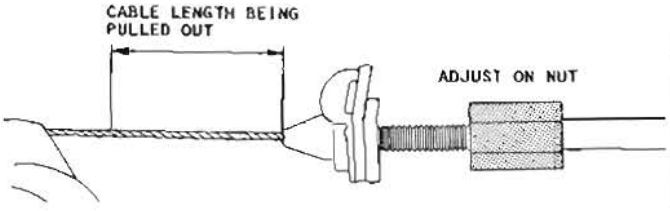

130869

Automatic transmission kickdown cable.

Check cable length at closed and open throttle, engine off. Open throttle measurement should be checked with throttle pedal in car depressed, NOT by actuating linkage by hand.

Cable should be pulled out 50 mm = 1.968".

Adjusting micro switch

A14

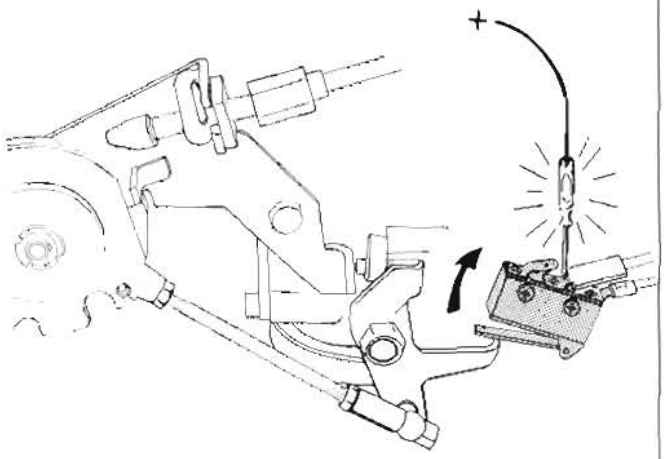

130870

Move micro switch UP.

Engine NOT running, throttle CLOSED.

Slacken micro switch retaining screws. Move micro switch UP until test light illuminates.

A15

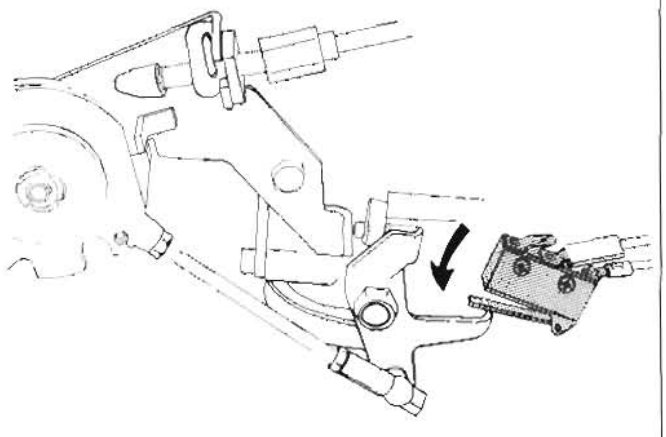

130871

Set micro switch position.

Move micro switch DOWN 2–5.5 mm = 0.08–0.10". Test light MUST NOT illuminate.
Tighten screws.

Remove test lamp, install panel etc.

Basic setting of Constant Idle Speed System

B21F–MPG 1981
Engine Identification Number (EIN): 498896 manual transmission
498897 automatic transmission

B21F CI 1982
Engine Identification Number (EIN): 498960 manual transmission
498961 automatic transmission

B1

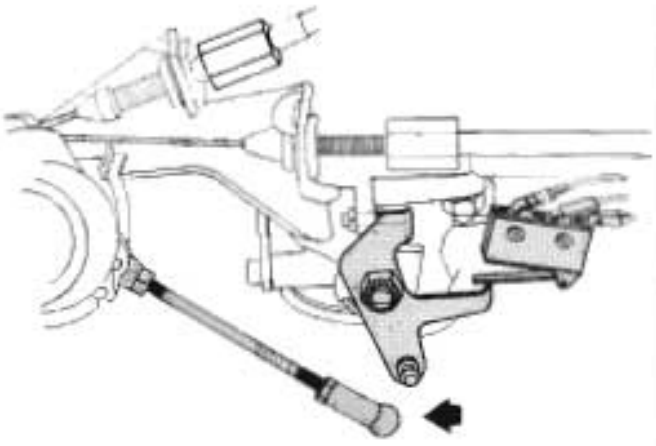

Disconnect throttle control rod.
At lever.

B2

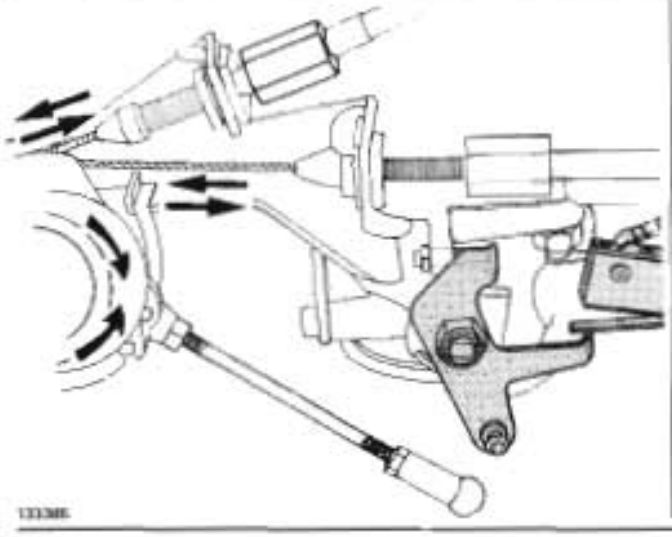

Check cable assembly.
Make sure cable and pulley run smoothly and do not bind in any position.

B3

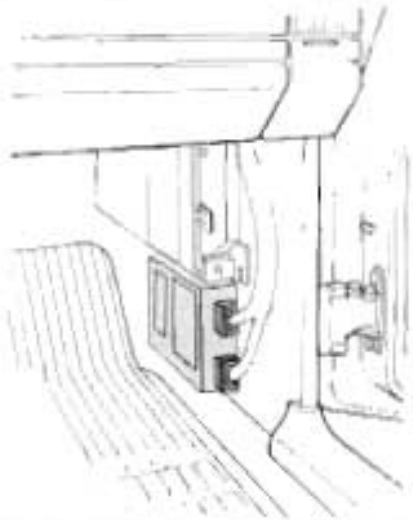

Remove panel in front of right front door.
Electronic Control Unit for Constant Idle Speed System is located below Electronic Control Unit for Lambda-sond system.

B4

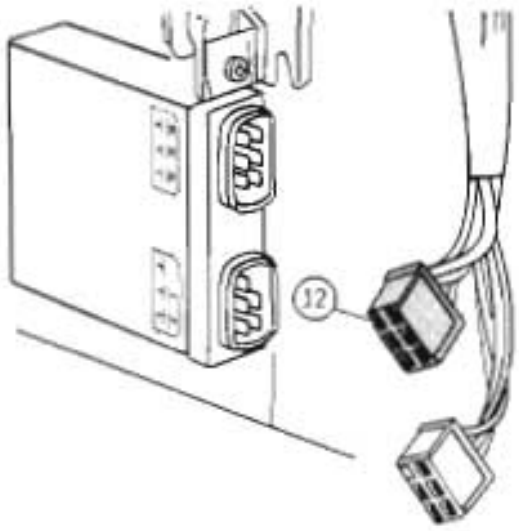

130381

B21F–MPG 1981:

De-activate Electronic Control Unit.

Disconnect white-red wire at terminal 12 of blue connector plug at Electronic Control Unit.

NOTE:

Same wire ends at ignition coil but cannot be disconnected there.

B5

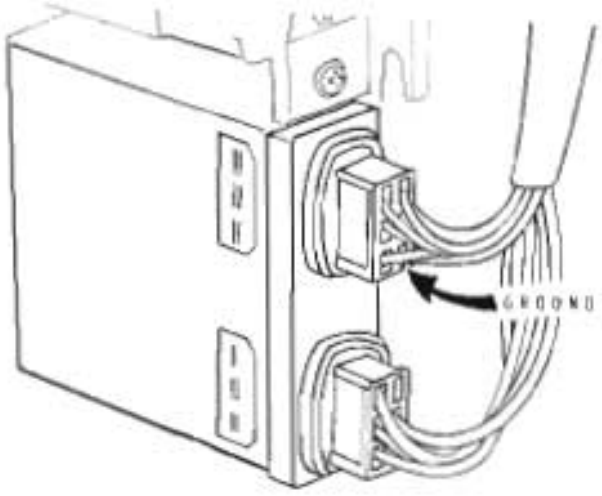

133384

B21F-CI 1982:

De-activate Electronic Control Unit.

Ground terminal 10, connector in place. Best way is to insert a copper wire along terminal wire.

B6

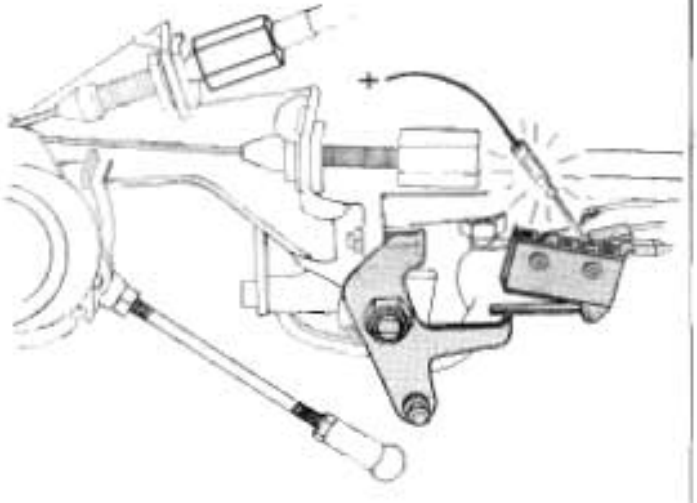

130873

Connect tachometer.

Good instrument to accurately measure engine RPM.

Connect test lamp.

Connect across battery plus terminal and terminal on micro switch with yellow wire connected.

Start engine.

Should be at normal operating temperature.

B7

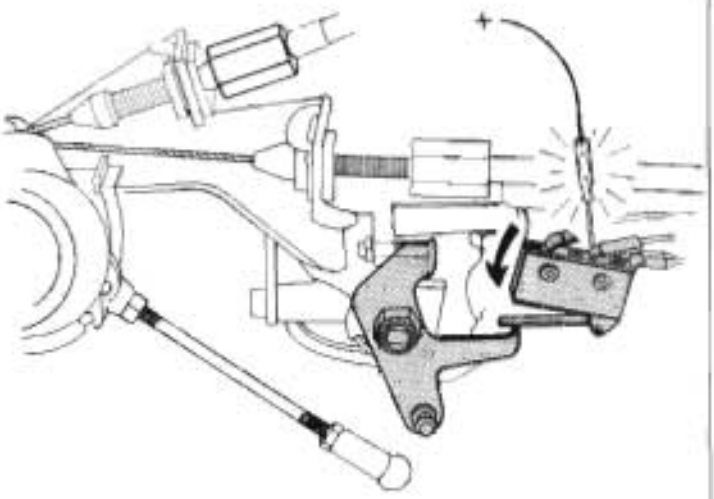

130874

Test light OUT.
Test light **MUST NOT** illuminate at idle speed.

If test light illuminates:
adjust micro switch position.
Slacken micro switch retaining screws. Move micro switch **DOWN** until test light goes out. Tighten retaining screws.

This is a temporary adjustment. Final adjustment will follow later on.

B8

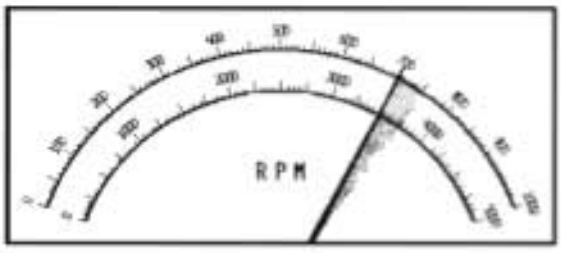

133388

Idle speed.
Idle speed should be:
700 rpm

(700–750 rpm permitted)

If outside these limits, idle speed should be adjusted.
See operations B9–B11.
Inside limits, proceed to op. B12.

Adjusting idle speed

B9

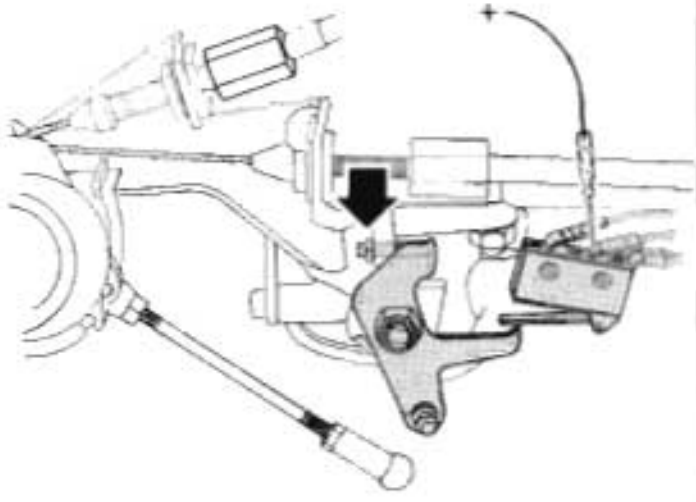

130875

Idle speed NOT 700 rpm
(700–750 rpm permitted):

NOTE:
Test light **MUST NOT** illuminate. If necessary, readjust micro switch position.

B10

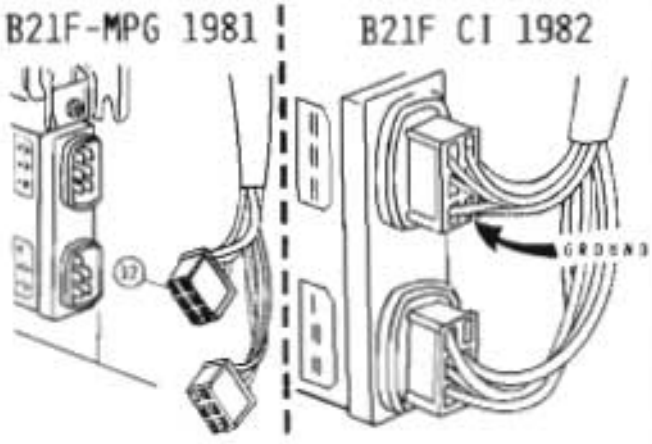

133391

Activate Electronic Control Unit.

B21F-MPG 1981:
Reconnect white-red wire in terminal 12 of blue connector plug at Electronic Control Unit.

B21 CI 1982:
Disconnect ground wire at terminal 10 of blue connector plug at Electronic Control Unit.

B11

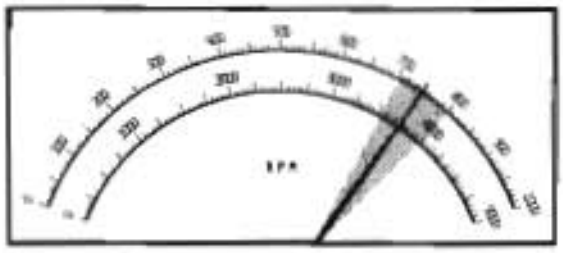

130876

Idle speed change.
After activating Electronic Control Unit, idle speed should change to **750 rpm** (700–800 rpm permitted for 1981, 730–770 for 1982).

Stop engine.

B12

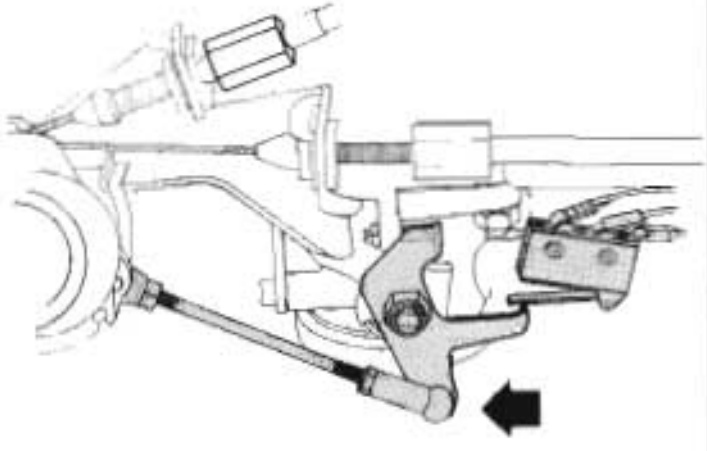

130677

Reconnect throttle control rod at lever.
Cable pulley should be completely retracted.

If adjustments of engine controls must be made, follow operations B11–B13 below.

Adjusting controls

B13

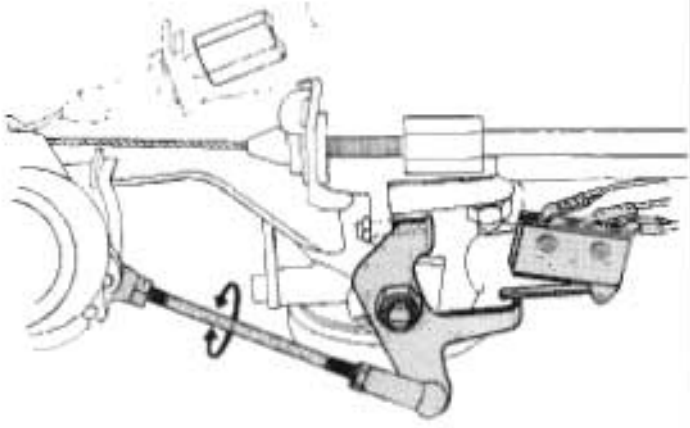

Adjust control rod length.

Disconnect throttle cable and automatic transmission kickdown cable.
Adjust control rod length as necessary.

B14

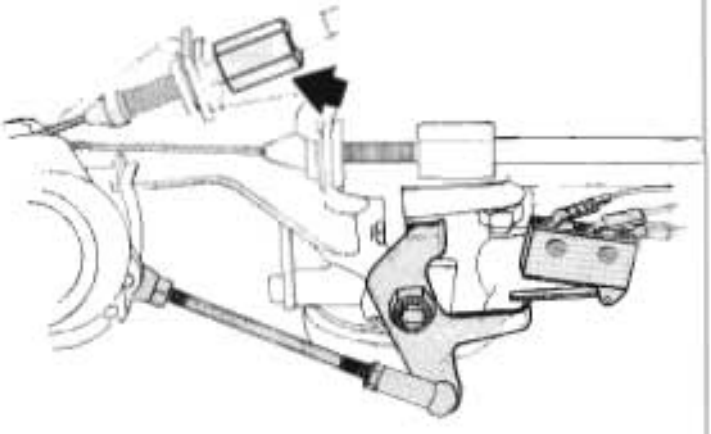

Attach and adjust throttle cable.

B15

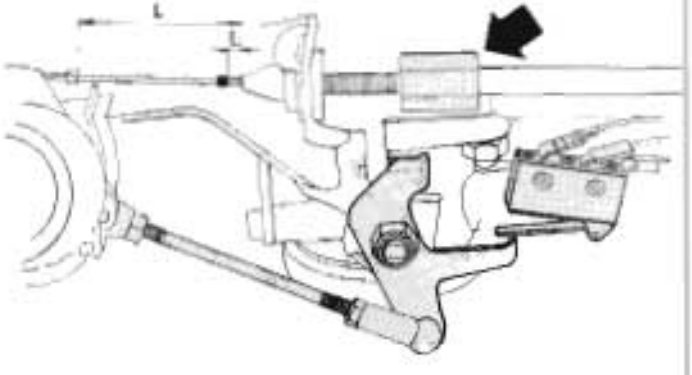

Automatic transmission kickdown cable.

Check cable length at closed and open throttle, engine off. Open throttle measurement should be checked with throttle pedal in car depressed, NOT by actuating linkage by hand.

Cable should be pulled out **50 mm** = 1.968".

Adjusting micro switch

B16

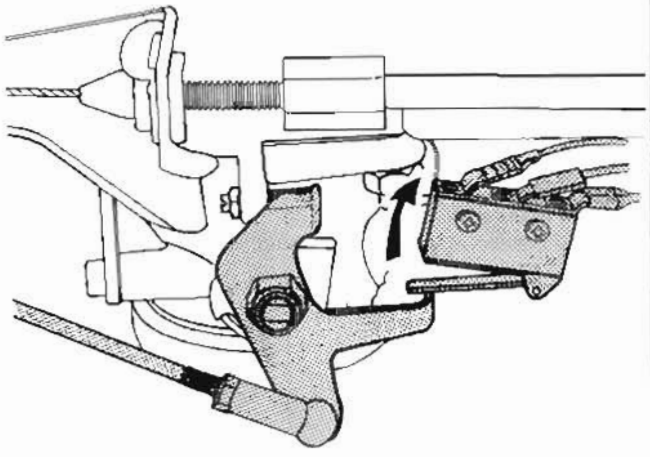

130881

Micro switch UP.

Engine NOT running, throttle CLOSED.

Slacken micro switch retaining screws. Move micro switch UP until test light illuminates.

B17

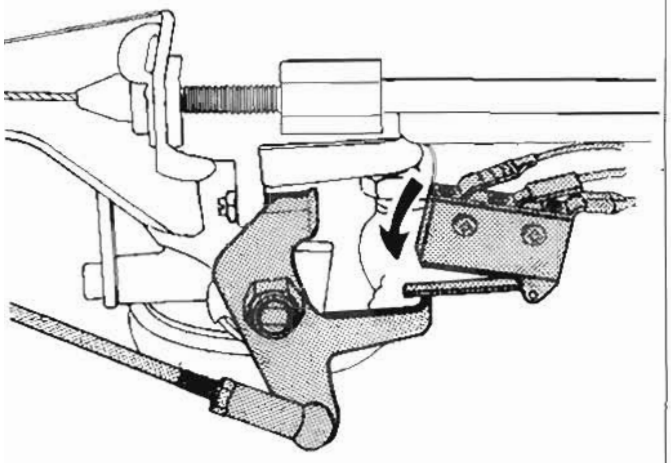

130882

Set micro switch position.

Move micro switch DOWN 2–2.5 mm = 0.08–0.10".
Test light MUST NOT illuminate.
Tighten screws.

Remove test lamp, install panel etc.

Basic setting of Constant Idle Speed System

B21F–Turbo 1981
Engine Identification Number (EIN): 498898 manual transmission (automatic not available)

B21F-Turbo 1982—:

Engine Identification Number (EIN):	**1982**	**1983**	**1984 (except intercooled)**	**1984—(intercooled)**
manual transmission:	498966	499800	499868	499926
automatic transmission:	498967	499801	499869	499927

C1

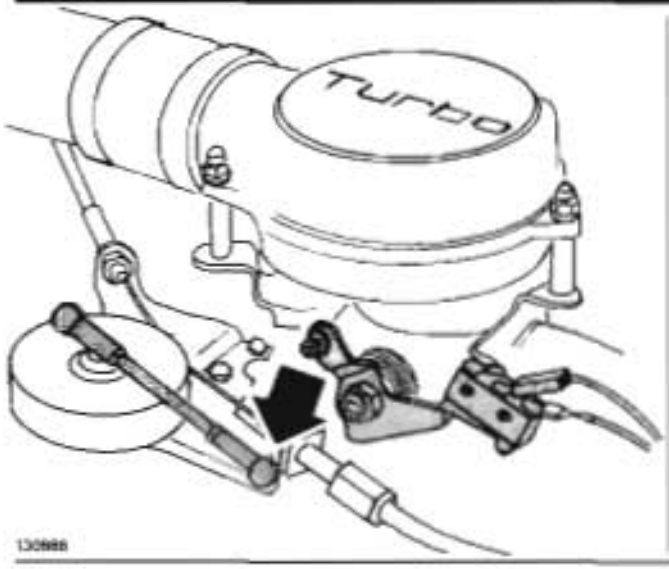

130888

Disconnect throttle control rod.
At throttle lever.

C2

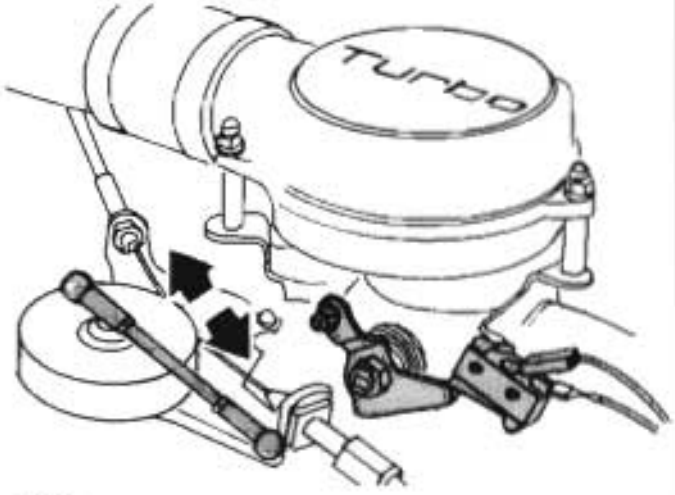

130889

Check cable assembly.
Make sure cable and pulley run smoothly and do not bind in any position.

C3

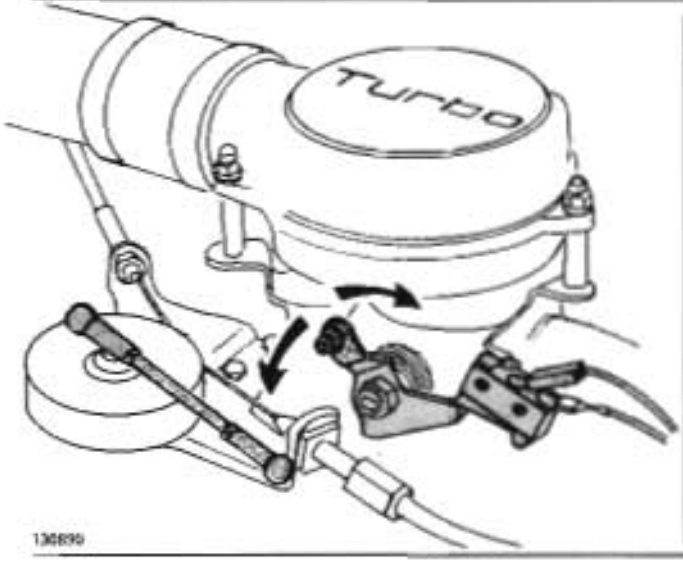

130890

Check throttle.
Make sure throttle shaft and throttle plate do not bind in any position.

C4



133310

Remove panel in front of right front door.
Electronic Control Unit for Constant Idle Speed Systems is located below Electronic Control Unit for Lambda-sond system.

C5

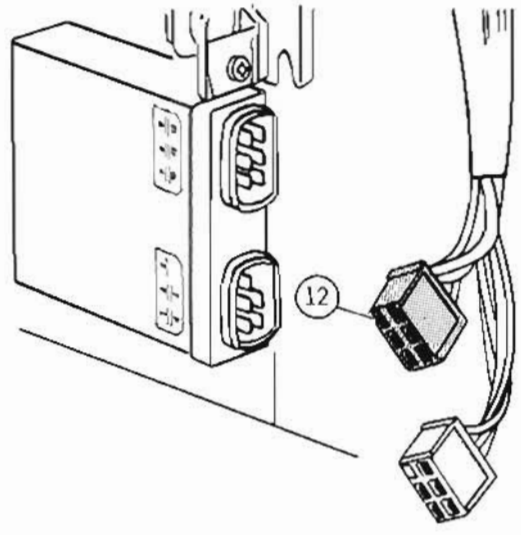

133381

B21F-Turbo 1981:

De-activate Electronic Control Unit.
Disconnect white-red wire at terminal 12 of blue connector plug at Electronic Control Unit.

NOTE:
Same wire ends at ignition coil but cannot be disconnected there.

C6

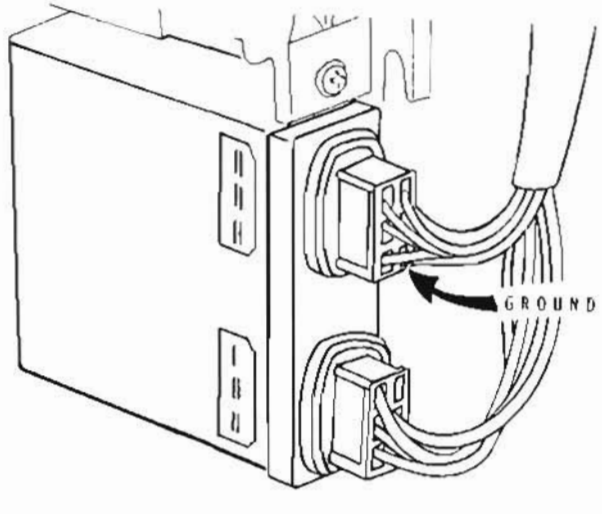

133384

B21FT 1982—
B21FT Intercooler 1984—
De-activate Electronic Control Unit.
Ground terminal 10, connector in place. Best way is to insert a copper wire along terminal wire.

C7

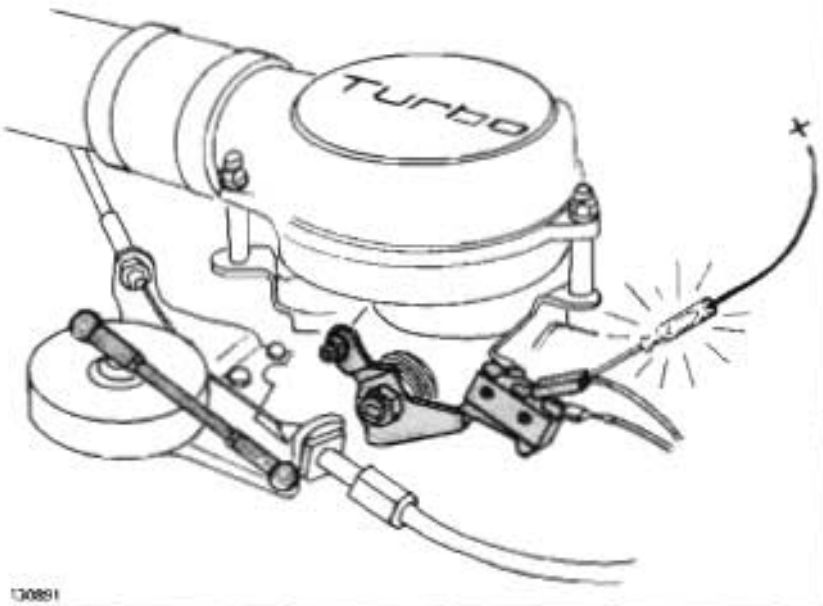

130891

Connect test lamp.
Connect across battery positive terminal and orange wire terminal on micro switch.

NOTE:
Test light **MUST NOT** illuminate while adjusting idle speed (electric circuit through micro switch is open). See op. C7

C8

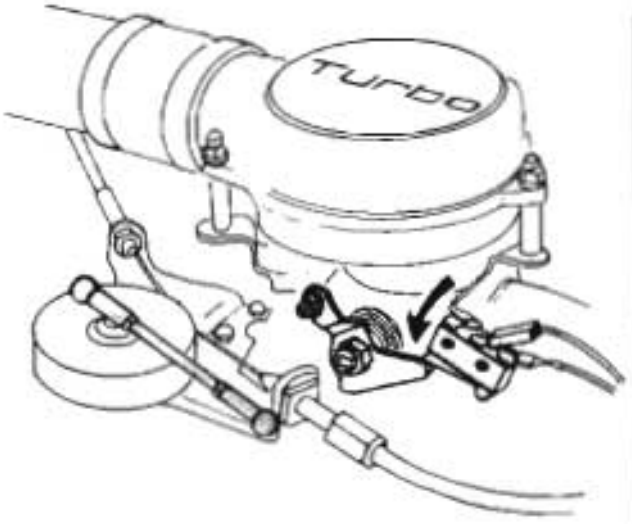

130892

If test light illuminates:
adjust micro switch position.
Slacken micro switch retaining screws. Move micro switch **DOWN** until test light goes **OUT**. Tighten screws.

This is a temporary adjustment. Final adjustment will follow later on.

C9

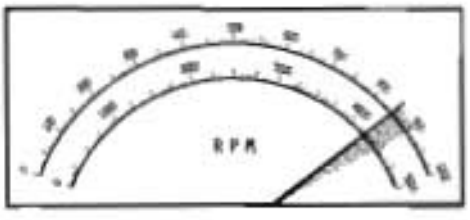

133390

Connect tachometer.
Good instrument to accurately measure engine speed.

Start engine.
Should be at normal operating temperature.

Idle speed should be:
850 rpm (850–900 rpm permitted).
If not, see op. C9–C15.

Adjusting idle speed

C10

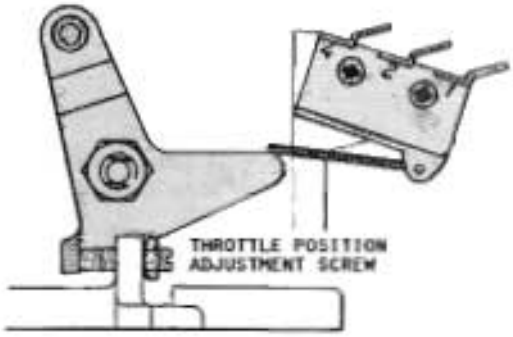

130863

Adjust throttle position.
Use throttle position adjustment screw to adjust idle speed to **850** rpm (850–900 rpm permitted).

NOTE:
Test light **MUST NOT** illuminate. If necessary, readjust micro switch position (DOWN).

C11

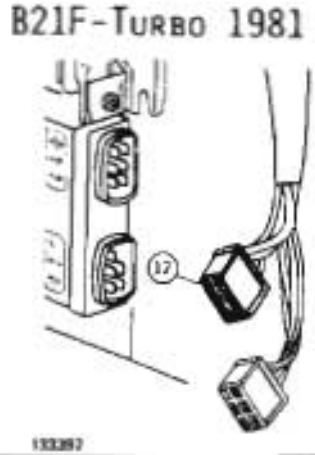

133387

Activate Electronic Control Unit.

B21F-Turbo 1981:
Reconnect white-red wire in terminal 12 of blue connector at Electronic Control Unit.

B21F5-Turbo 1982—; B21F-Turbo Intercooler 1984—
Disconnect test point from ground.

C12

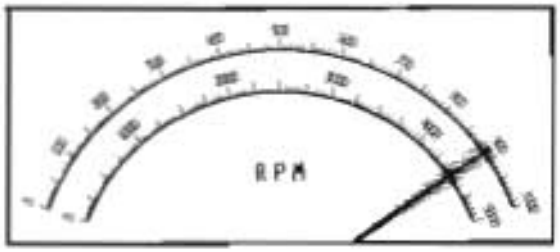

130886

Idle speed change.
After activating Electronic Control Unit, idle speed should change to:

1981: ..... 900±50 rpm
1982: ..... 900±20 rpm

Stop engine, install panel etc.

C13

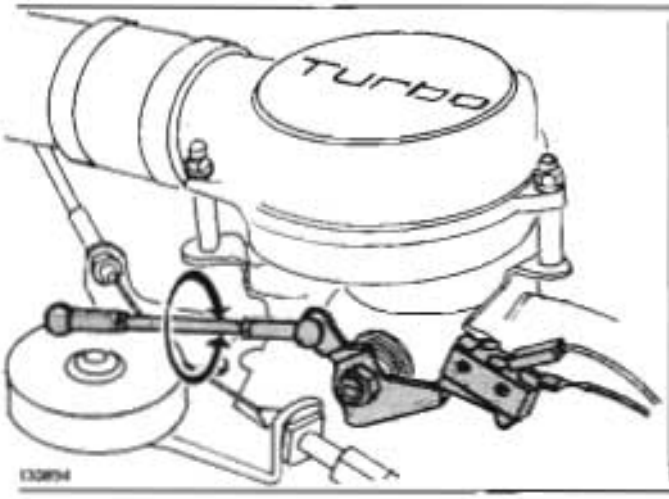

133894

Reconnect throttle control rod at lever.
Cable pulley should be completely retracted.

Disconnect throttle cable (automatic transmission: also kickdown cable).

Adjust control rod length as necessary.

C14

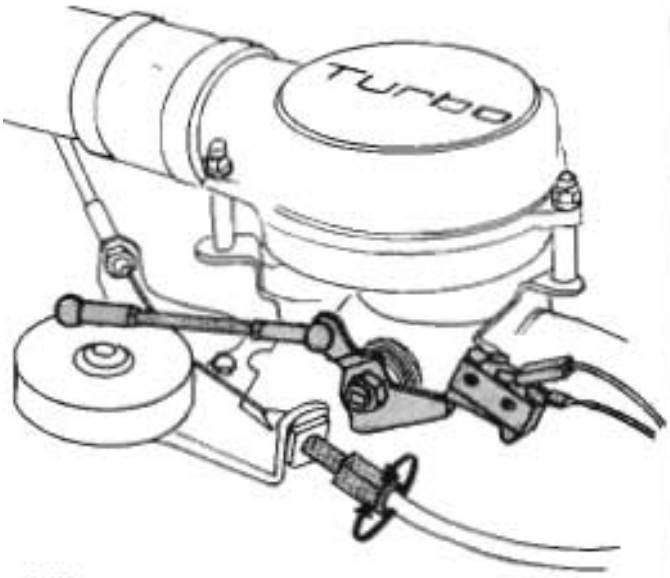

130895

Attach and adjust throttle cable.

C15

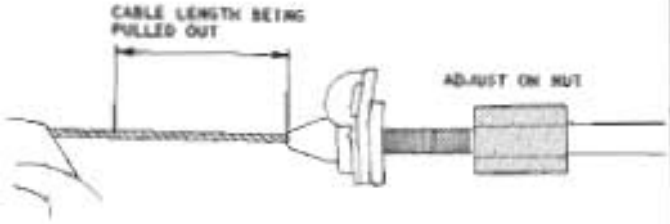

130893

Automatic transmission: adjust kickdown cable.

Check cable length at closed and open throttle. Open throttle measurement should be checked with throttle pedal in car depressed, NOT by actuating linkage by hand.

Cable should be pulled out **50 mm** = 2".

Adjusting throttle switch

C16

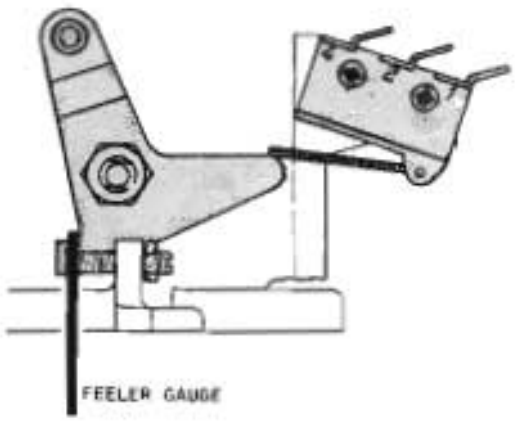

130896

Insert feeler gauge.

Insert 0.3 mm (0.01 in.) feeler gauge between throttle adjustment screw and throttle control lever.

C17

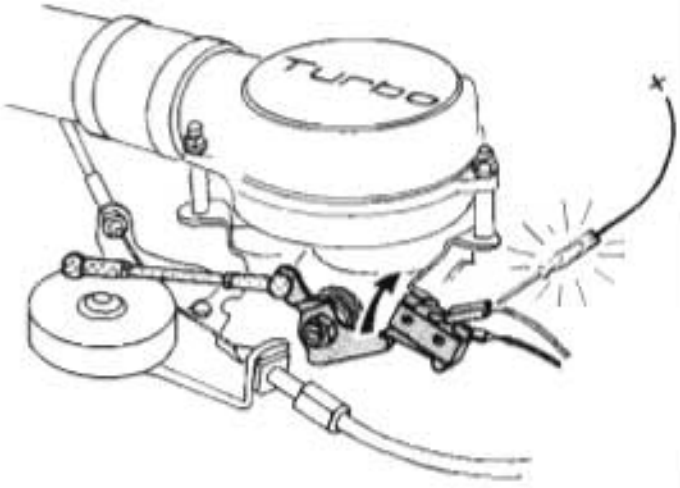

130857

Switch UP.
Move switch UP until test light illuminates.

C18

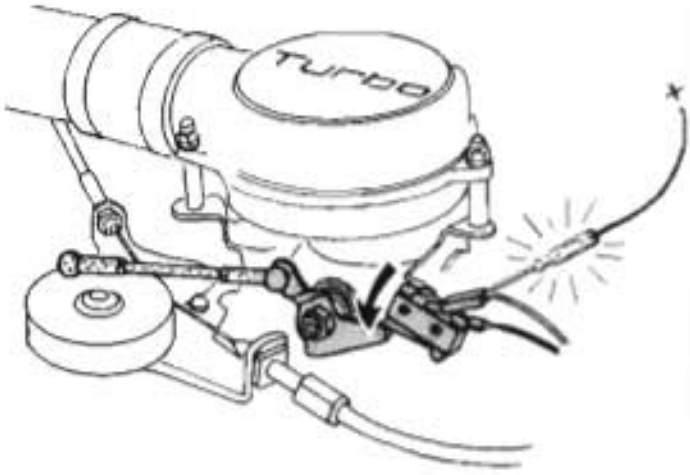

130858

Setting micro switch.
Move micro switch DOWN until test light just goes out.

Remove feeler gauge, instruments etc.
Install panel.

Basic setting of Constant Idle Speed System

B21F LH-Jetronic 1982

Engine Identification Number (EIN): 498962 manual transmission
498963 automatic transmission

D1

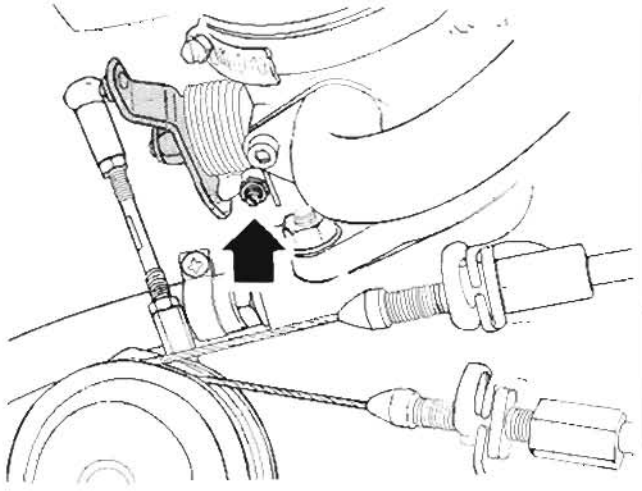

133375

Seat throttle butterfly valve.

Loosen stop nut on adjuster screw. Unscrew adjuster screw a couple of turns.

Make sure throttle butterfly valve is properly seated in housing.

Set adjuster screw.

Screw in adjuster screw until it just touches lever, then additional 1/4 turn. Lock with lock nut.

D2

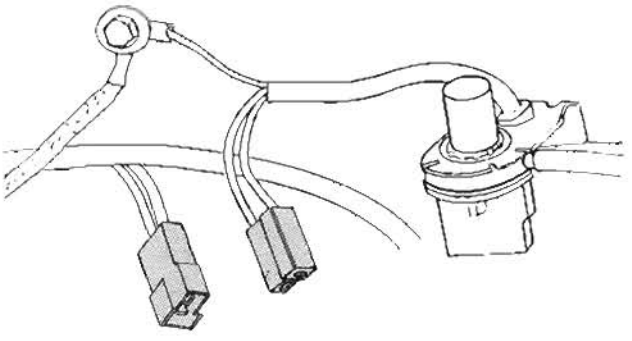

133376

Disconnect connector at firewall.

D3

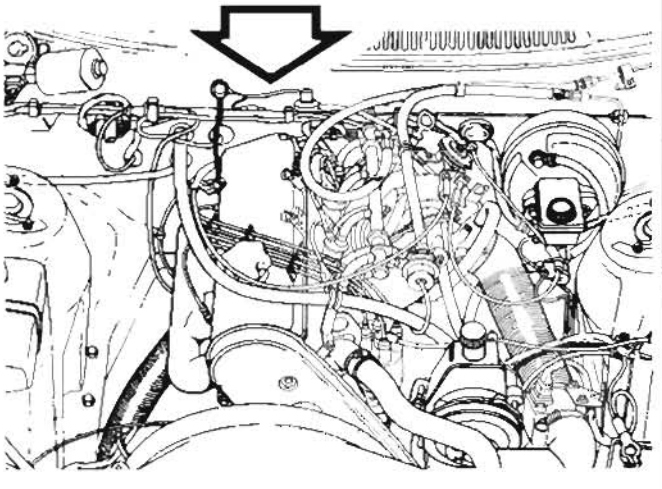

133377

This illustration shows location of connector.

D4

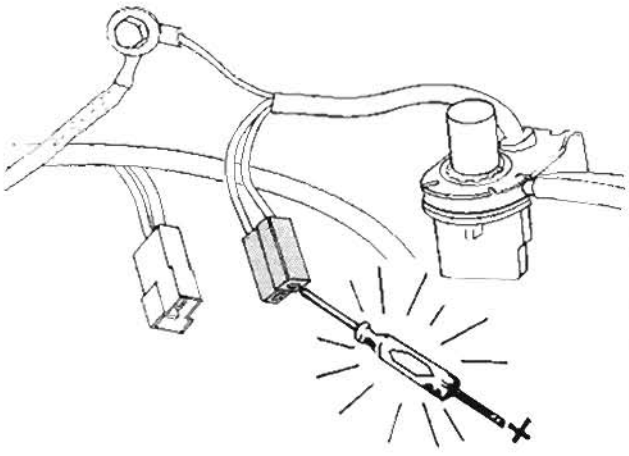

133378

Test on idle speed.
Connect test lamp across battery plus and orange wire terminal in connector. Start engine.
Test light should illuminate at idle speed. If not: readjust adjuster screw for throttle butterfly valve position.

D5

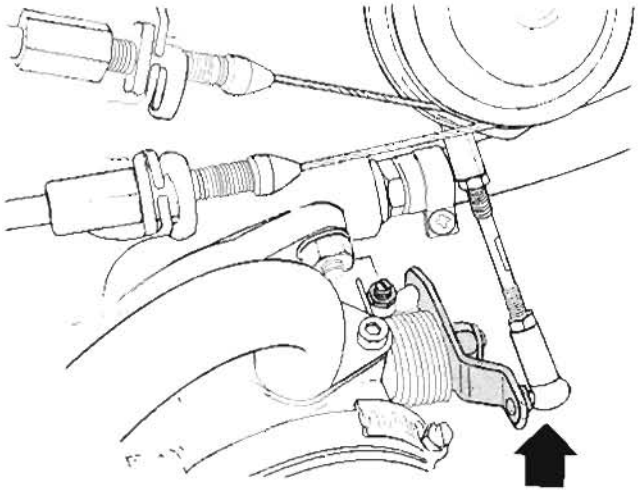

133379

Open throttle slightly.
Engine running on idle. Open throttle slightly **by hand** at throttle control lever.

D6

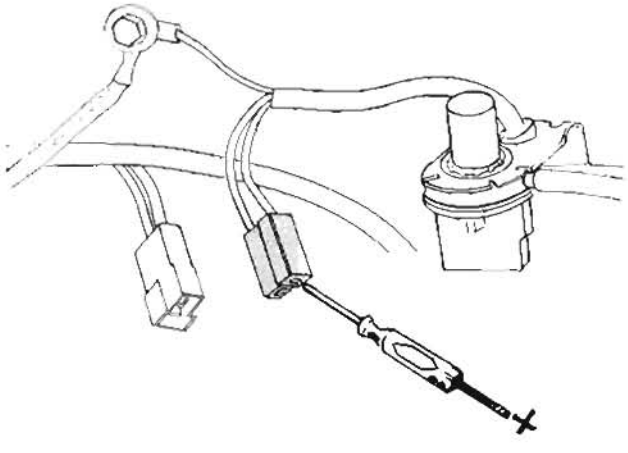

133380

Test above idle speed.
Test lamp should go OUT. If not, recheck and try a new vacuum switch.

Basic setting of Constant Idle Speed System

B28F 1981
Engine Identification Number (EIN): 498638 manual transmission
498639 automatic transmission

B28F 1982:
Engine Identification Number (EIN): 498667 automatic transmission (only)

E1

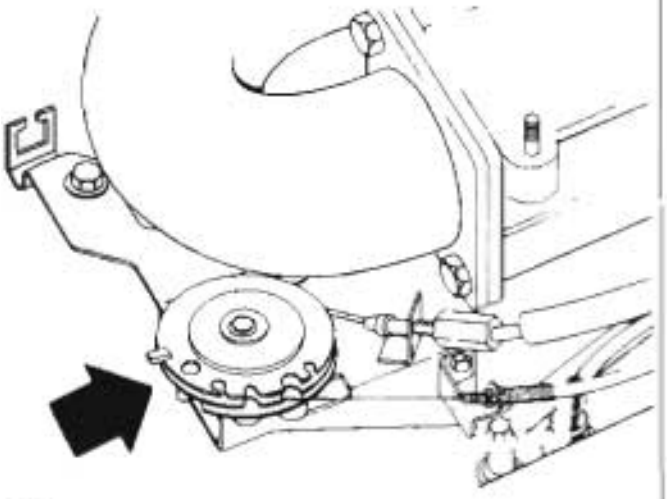

130900

Disconnect throttle control rod.
At cable pulley.

E2

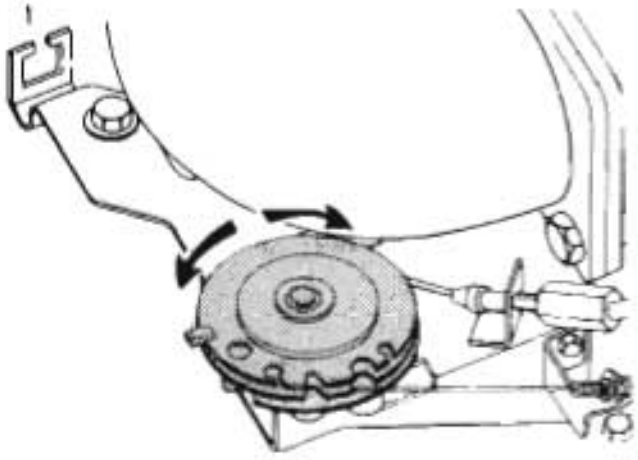

130901

Check cable assembly.
Make sure cable and pulley run smoothly and do not bind in any position.

E3

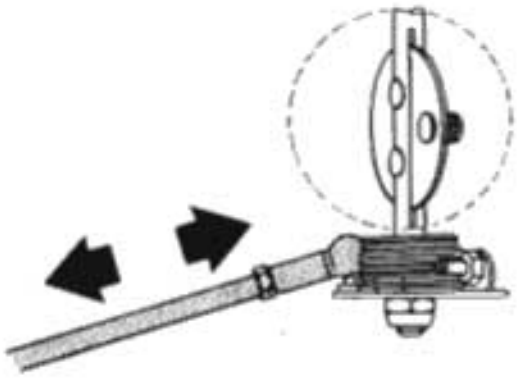

130902

Check throttle.
Make sure throttle shaft and throttle plate do not bind in any position.

E4

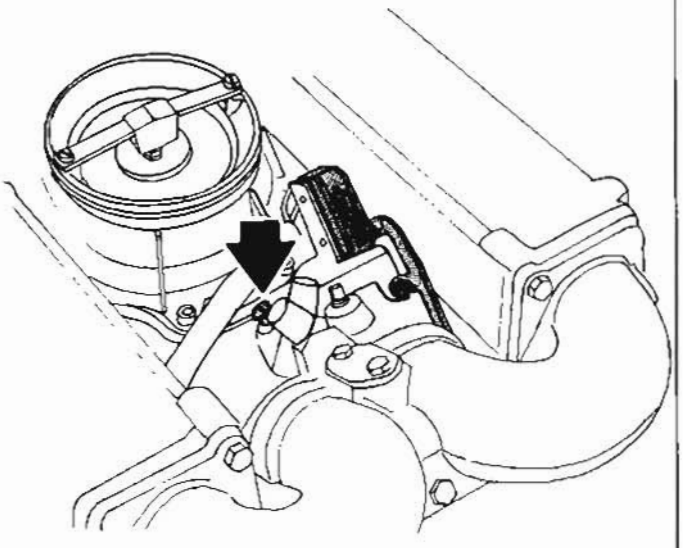

130903

Idle speed adjustment screw.
Make sure it is screwed to bottom.

NOTE:
This screw is used to adjust idle speed on engines without CIS System.

E5

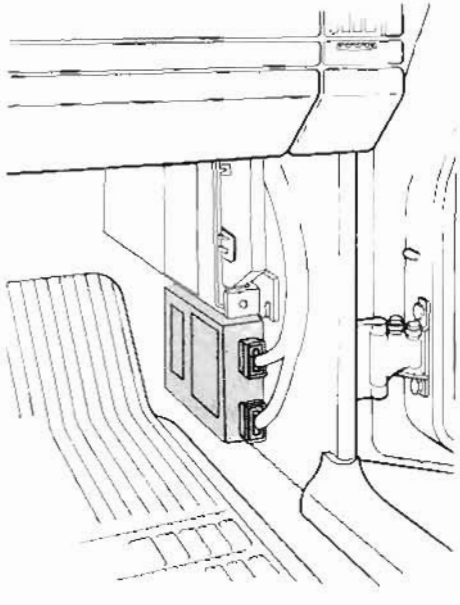

133310

Remove panel in front of right front door.
Electronic Control Unit for Constant Idle Speed System is located below Electronic Control Unit for Lamda-sond system.

E6

B28F 1981

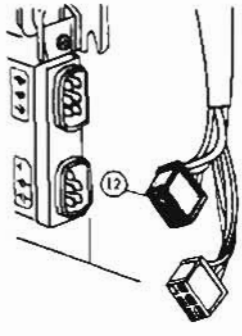

133393

B28F 1981:
De-activate Electronic Control Unit.
Disconnect white-red wire at terminal 12 of blue connector plug at Electronic Control Unit.

NOTE:
Same wire ends at ignition coil but cannot be disconnected there.

E7

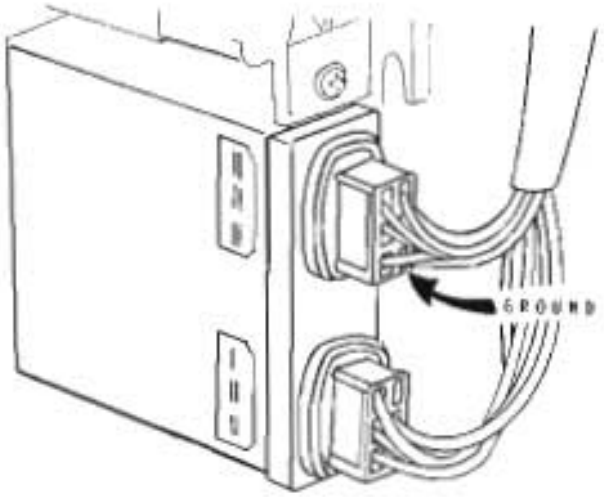

133384

B28F 1982:
De-activate Electronic Control Unit.
Ground terminal 10, connector in place. Best way is to insert a copper wire along terminal wire.

E8

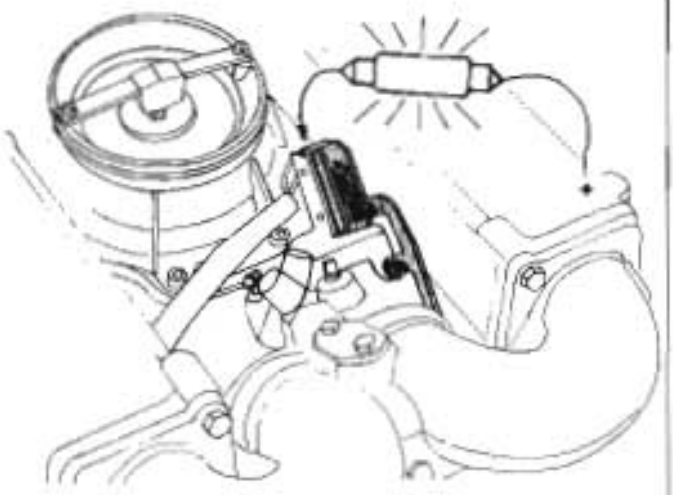

130904

Connect test lamp.
Connect across battery positive terminal and orange wire terminal on micro switch.

1981: test light should illuminate while adjusting = electric circuit through micro switch is closed.

1982: test light shuld NOT illuminate while adjusting = electric circuit through micro switch is interrupted.

Connect tachometer.

Adjusting idle speed

E9

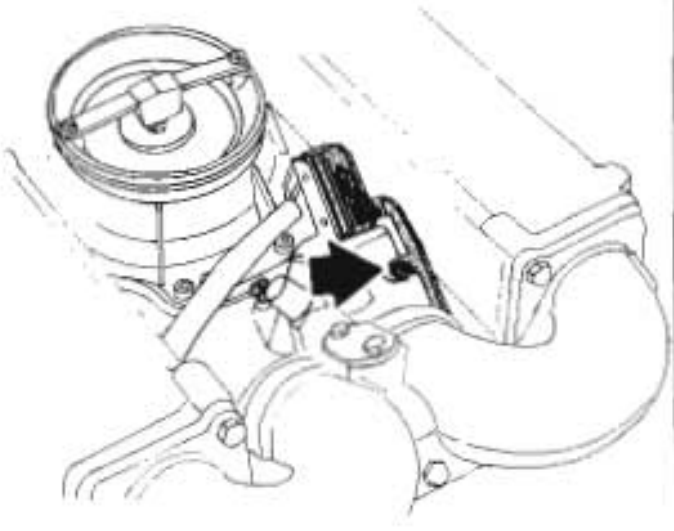

130905

Start engine.
Should be at normal operating temperature.

Adjust idle speed.
850 rpm (850–900 rpm permitted)

Adjust at throttle position adjustment screwn.
DO NOT adjust idle speed screw. It should be screwed to the bottom.

E10

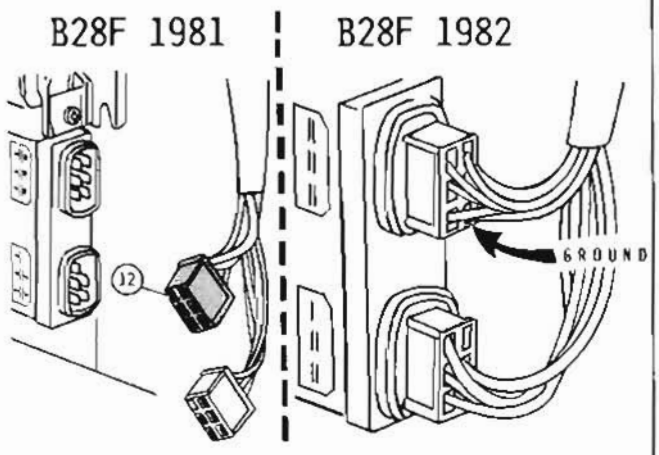

133393

Activate Electronic Control Unit

B28F 1981

Reconnect white-red wire in blue connector plug at Electronic control unit.

B28F 1982

Disconnect test point from ground.

E11

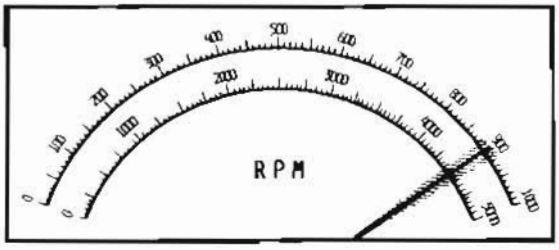

130885

Idle speed change.

After activating Electronic Control Unit, idle speed should change to:

900 rpm

1981 permitted: 850–950 rpm
1982 permitted: 880–920 rpm

Stop engine, install panel etc.

Adjusting controls

E12

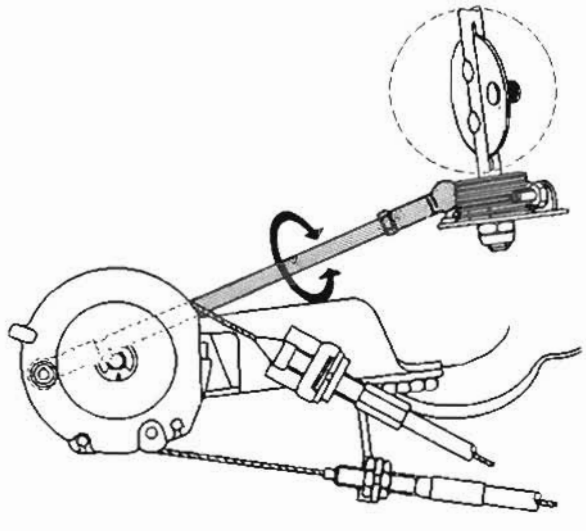

130906

Reconnect throttle control rod at cable pulley.

Disconnect throttle cable and automatic transmission kickdown cable.

Cable pulley should be completely retracted. Adjust control rod length as necessary.

E13

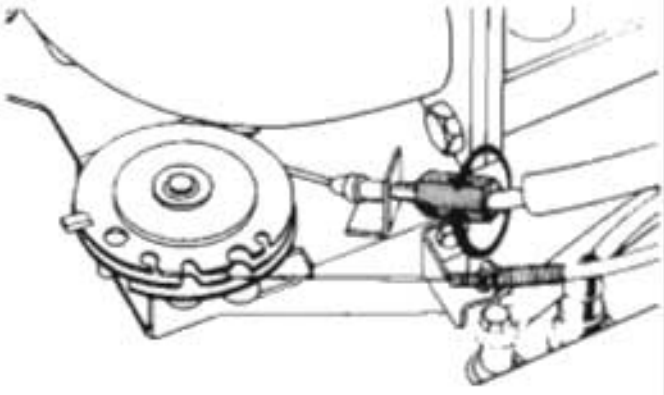

130907

Attach and adjust throttle cable.

E14

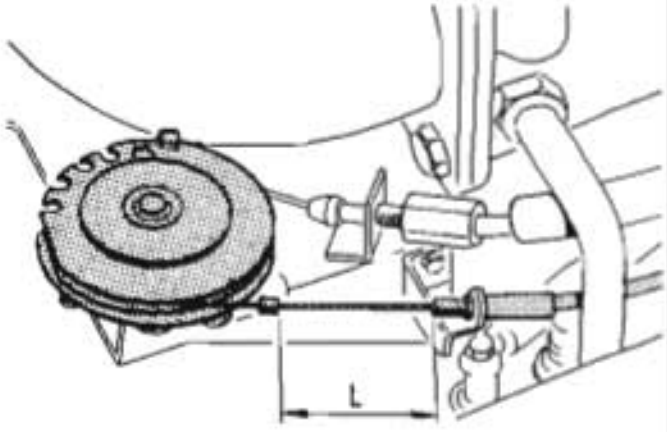

130908

Automatic transmission:
adjust kickdown cable.

Check cable length at closed and open throttle (engine off). Open throttle measurement should be checked with throttle pedal in car depressed, NOT by actuating linkage by hand.

Cable movement should be 50 mm = 1.968".

Closed throttle: L = 1 mm
Open throttle: L = 51 mm

Adjusting micro switch

E15

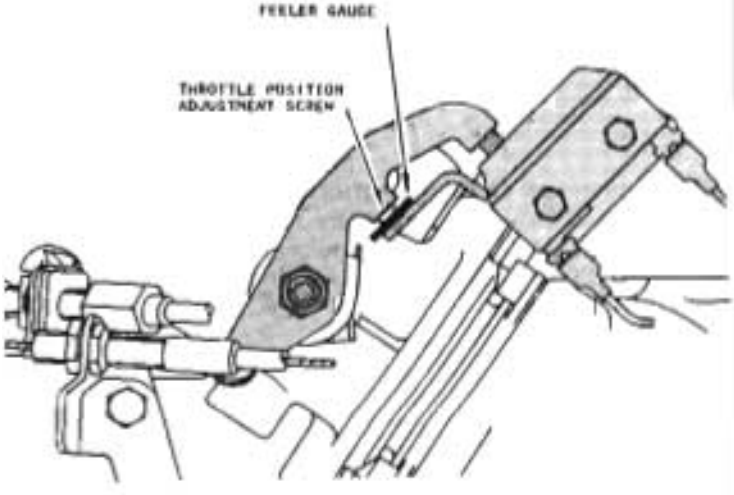

130909

Install feeler gauge.

Use feeler gauge 0.3 mm = 0.12".

Insert between throttle position adjustment screw and stop.

Illustration shows 1981 switch arrangement. 1982 model switch looks slightly different.

E16

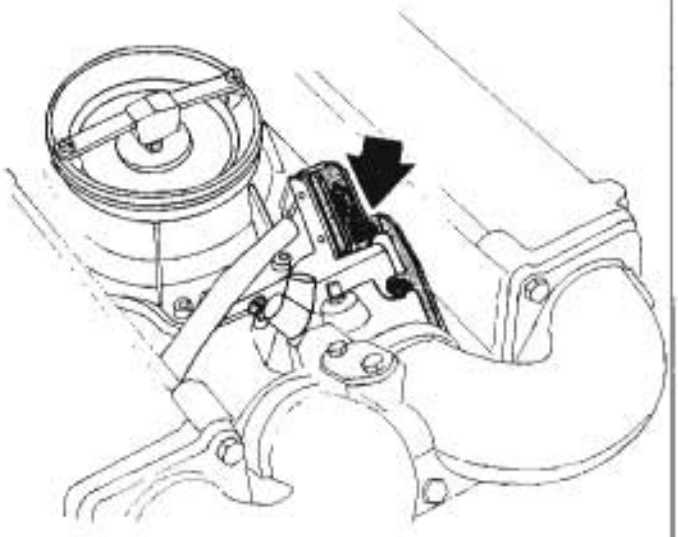

130910

Adjust.

1981: turn adjustment screw until test light goes out.

1982: turn adjustment screw until test light illuminates.

Adjusting full throttle enrichment switch

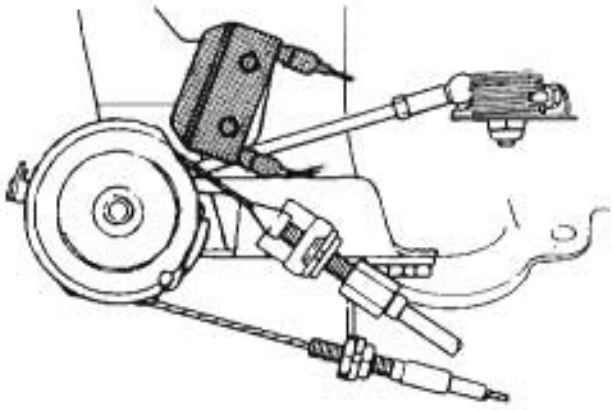

130911

NOTE:
B28F is equipped with **two** micro switches actuated by throttle control. The second micro switch closes a Lambda-sond circuit at full throttle to provide richer air/fuel mixture at maximum acceleration.

NOTE:
Vehicles modified for high altitude have this micro switch disconnected.

E17

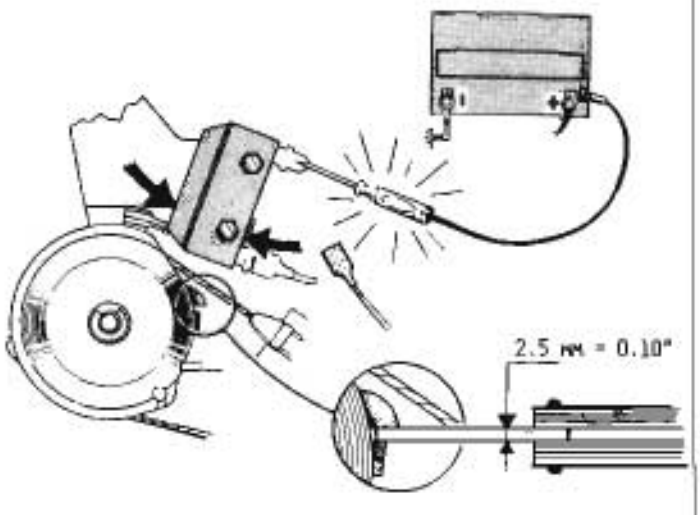

130912

Adjusting full throttle enrichment switch.
Loosen retaining screws for micro switch. Turn micro switch sideways. Test light should come on/go out **2.5 mm** – 3/32" before pulley touches full throttle stop. Tighten retaining screws.

E18

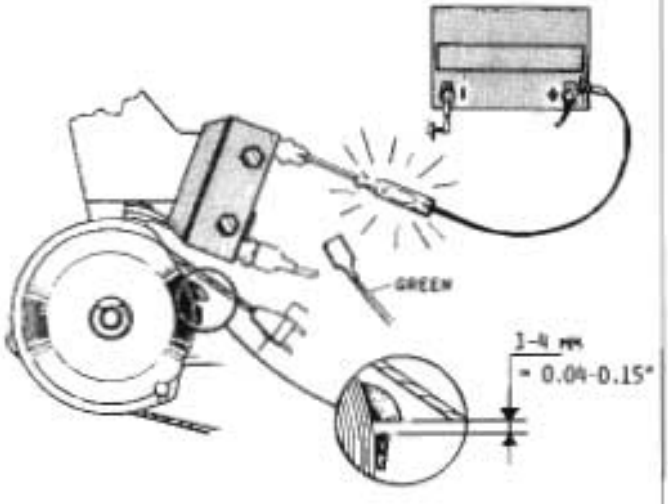

130913

Checking full throttle enrichment switch operation.

Disconnect green wire at micro switch. Connect test light between micro switch terminal and battery positive (+) terminal.

Turn pulley slowly to full throttle stop. Test light should illuminate 4 to 1 mm=5/32" to 1/32" before pulley touches stop.

Adjust as necessary, see E17.

CIS System
B21F CI

Fuse No. 13:
Instruments
Turn signals
Seat belt warning
CIS System

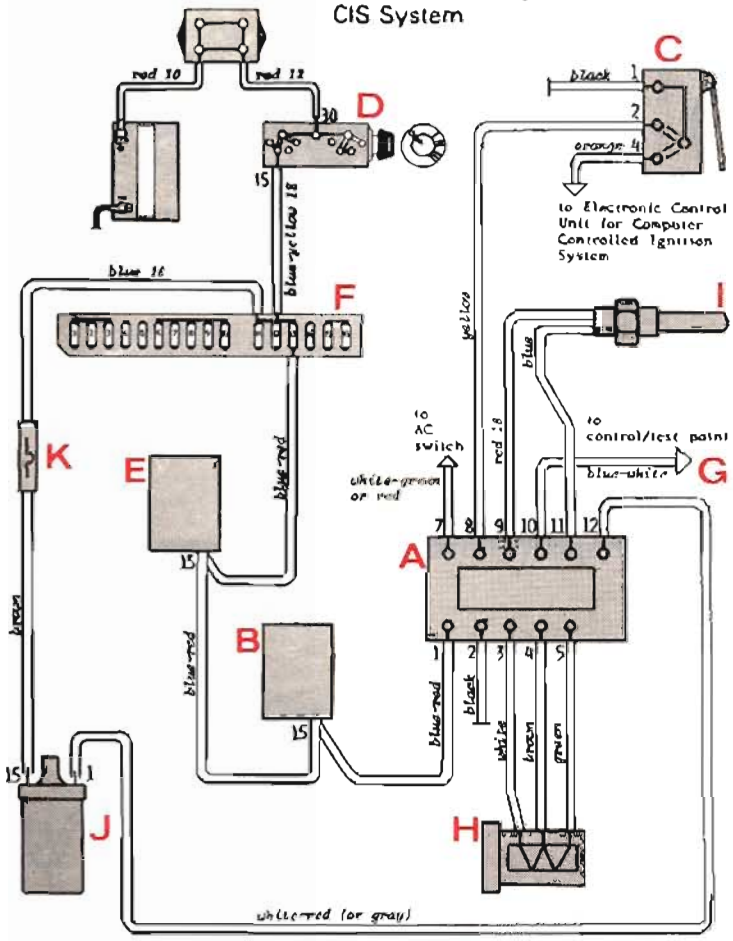

Legend:
A ECU (Electronic Control Unit)
B Seat belt reminder unit
C Throttle switch
D Ignition switch
E Fuel pump relay
F Fuse box
G Control/test point
H Air control valve
I Coolant temperature sensor
J Ignition coil
K Ballast resistor

General.
Coolant temperture sensor (I) continuously sends a signal to the ECU so it can set an idle speed that corresponds to the coolant temperature.
(G) is designated control/test point. It is a connection that for convenience is used on the production line.
Throttle switch (C) has a double function. At idle it grounds a wire connected to the ECU for ignition system. When the air conditioning is operating, a micro switch at the AC switch energizes terminal 7 of the ECU. This will increase idle speed from approx. 750 rpm to 900 rpm and improve AC operation and cooling (due to faster running coolant pump and fan).

Idle speed.
Ground circuit through throttle switch (C) is interrupted. The Electronic Control Unit (A) (ECU) controls air control valve (H) to set correct idle speed.

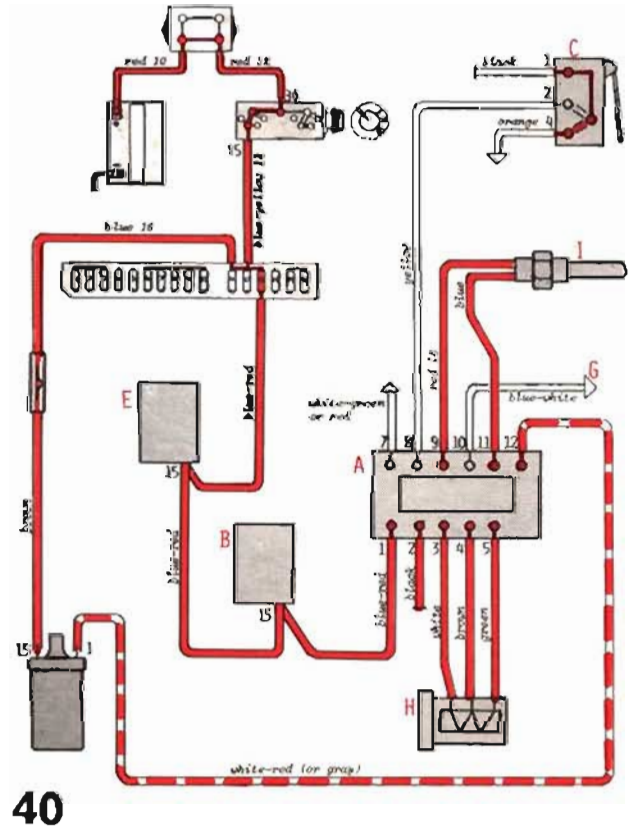

Above idle speed.
Ground circuit through throttle switch (C) is closed). ECU (H) controls air control valve (H) to set high air flow (to avoid engine stalls).

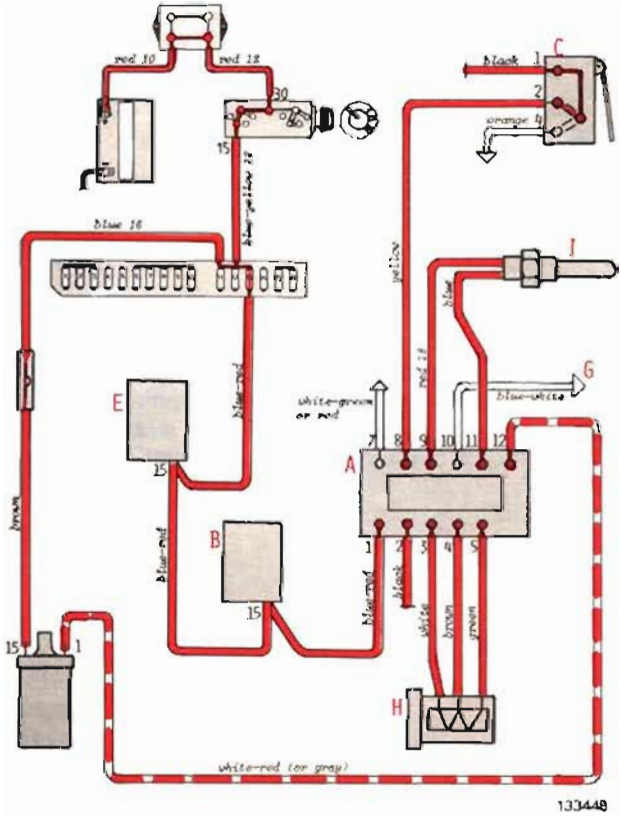

133448

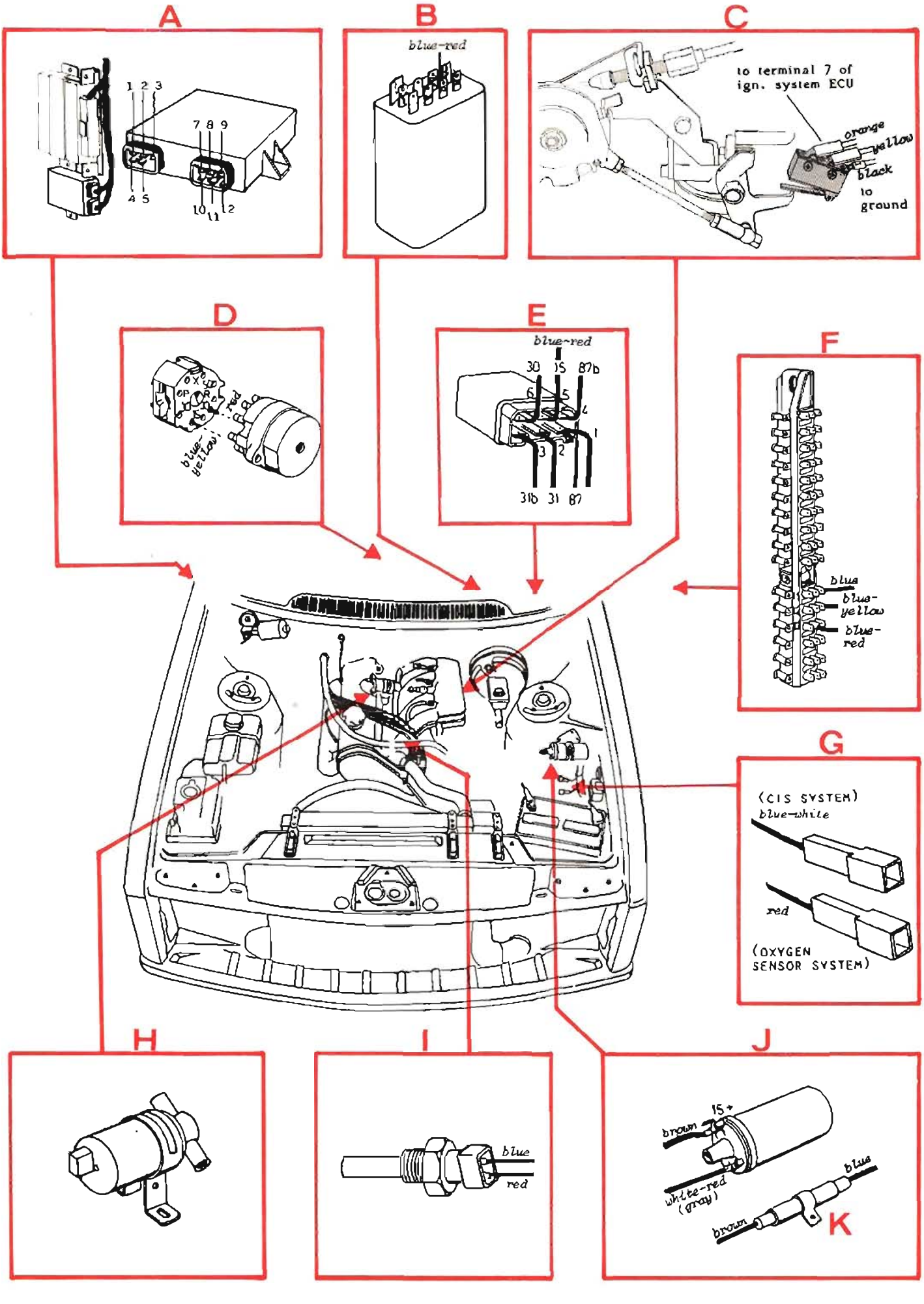
A
1 2 3
7 8 9
4 5
10 11 12
B
blue-red
C
to terminal 7 of ign. system ECU
orange
yellow
black
to ground
D
red
blue-yellow
E
blue-red
30 15 87b
6 5 4 1 3 2
31b 31 87
F
blue
blue-yellow
blue-red
G
(CIS SYSTEM)
blue-white
red
(OXYGEN SENSOR SYSTEM)
H
I
blue
red
J
15+
brown
white-red (gray)
blue
brown
K

Fuse No. 13:
Instruments
Turn signals
Seat belt warning
CIS System

CIS System
B21F LH-Jetronic

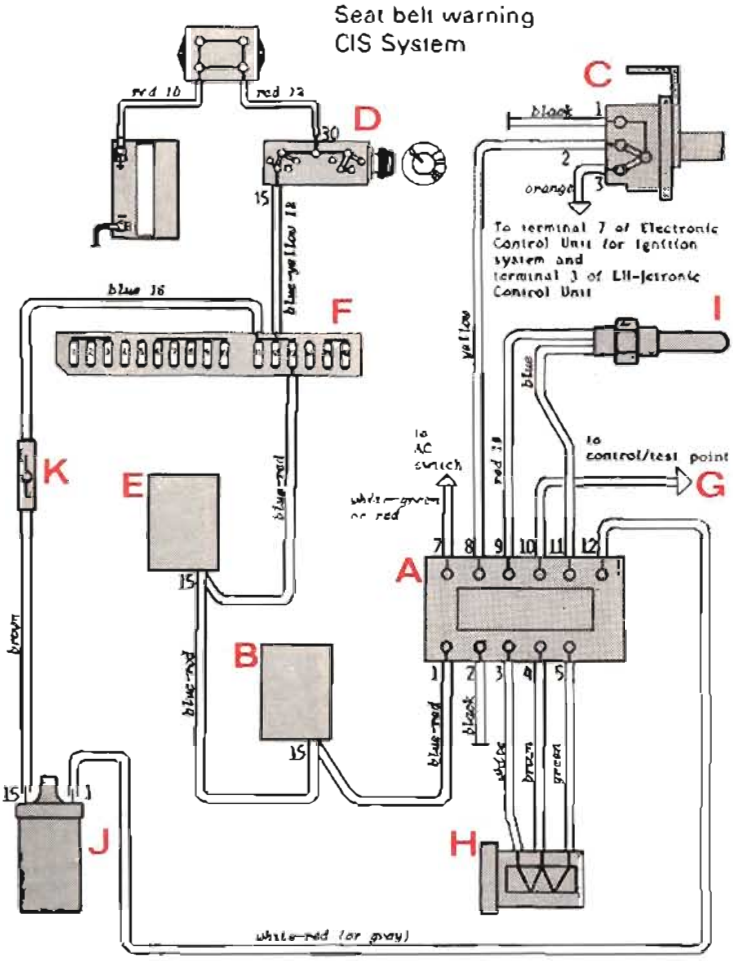

Legend:
A ECU (Electronic Control Unit)
B Seat belt reminder unit
C Throttle switch
D Ignition switch
E Fuel pump relay
F Fuse box
G Control/test point
H Air control valve
I Coolant temperature sensor
J Ignition coil
K Ballast resistor

General.
Coolant temperature sensor (I) continuously sends a signal to the ECU so it can set an idle speed that corresponds to the coolant temperature.
(G) is designated control/test point. It is a connection that for convenience is used on the production line.
Throttle switch (C) has a double function. At idle it grounds a wire connected to the ECU for ignition system. When the air conditioning is operating, a micro switch at the AC switch energizes terminal 7 of the ECU. This will increase idle speed from approx. 750 rpm to 900 rpm and improve AC operation and cooling (due to faster running coolant pump and fan).

Idle speed.
Ground circuit through throttle switch (C) is interrupted. The Electronic Control Unit (A) (ECU) controls air control valve (H) to set correct idle speed.

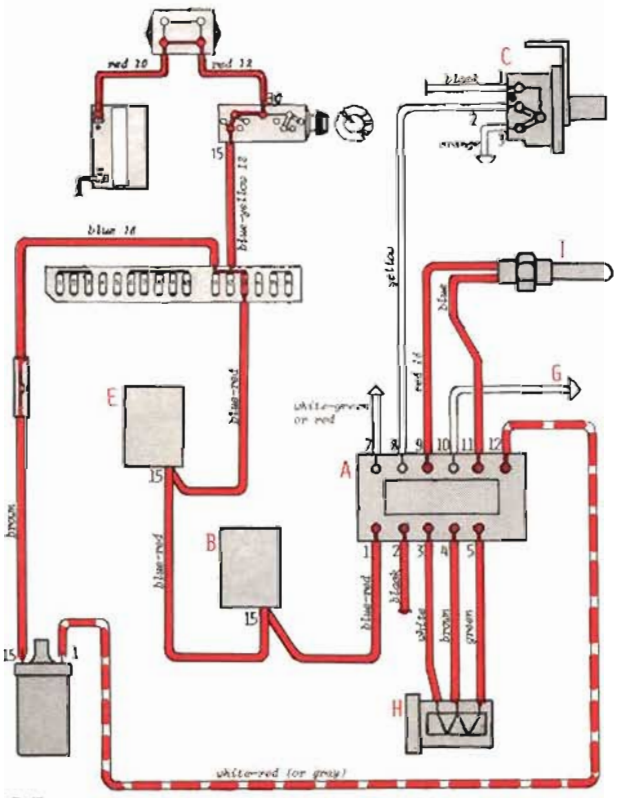

Above idle speed
Ground circuit through throttle switch (C) is closed). ECU (H) controls air control valve (H) to set high air flow (to avoid engine stalls).

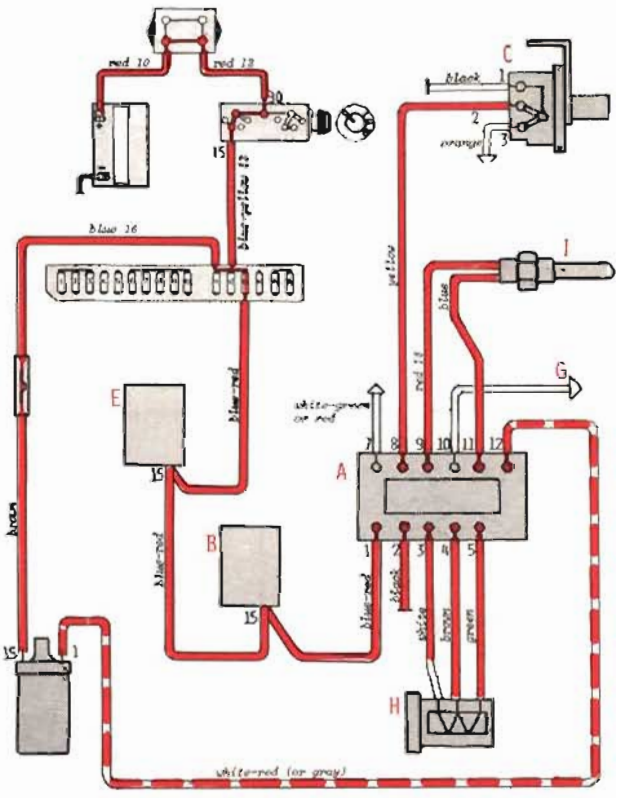

133450

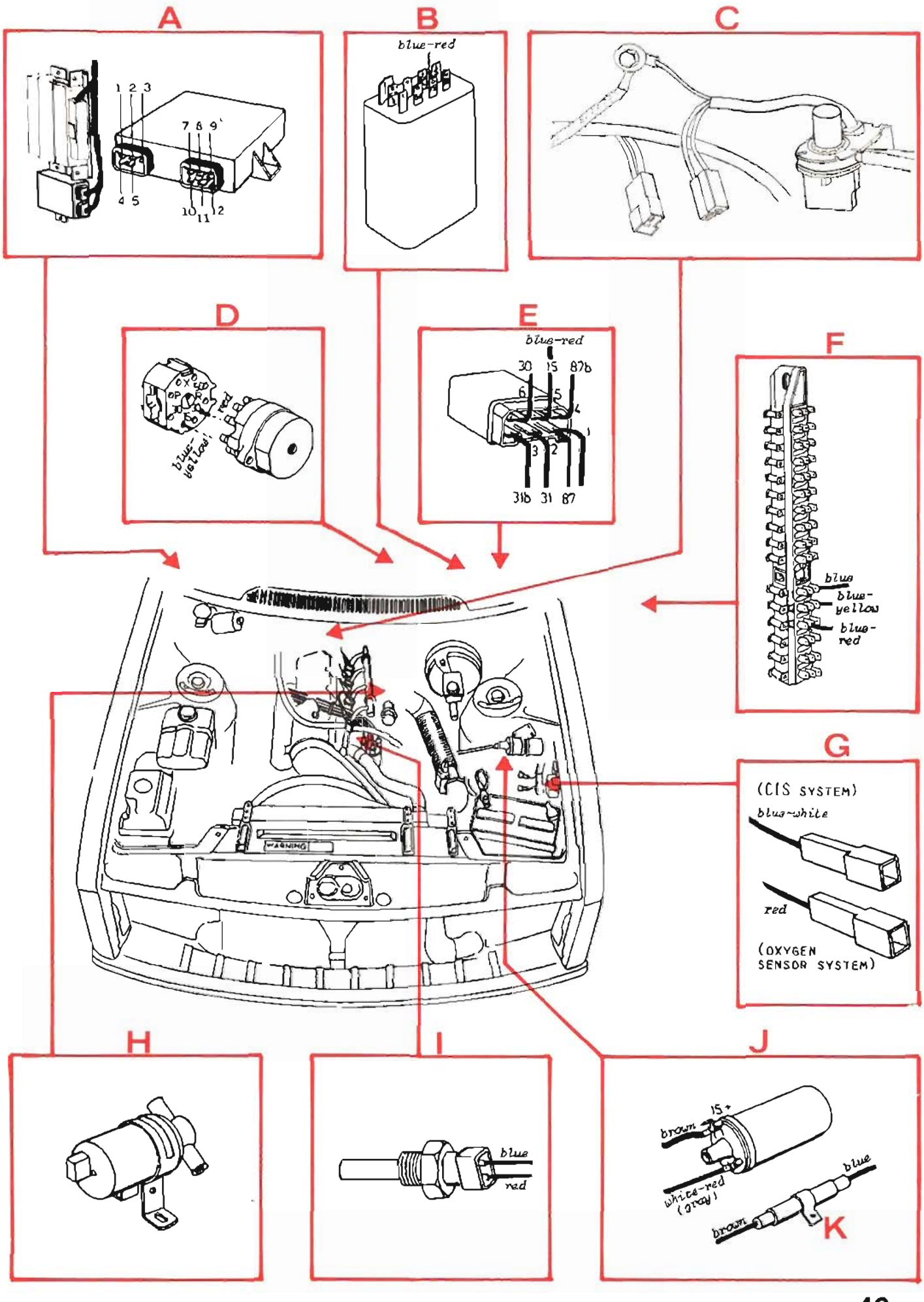
A
1 2 3
7 8 9
4 5
10 11 12
B
blue-red
C
D
red
blue-yellow
E
blue-red
30 15 87b
6 5 4 1
3 2
31b 31 87
F
blue
blue-yellow
blue-red
WARNING
G
(CIS SYSTEM)
blue-white
red
(OXYGEN SENSOR SYSTEM)
H
I
blue
red
J
15+
brown
white-red (gray)
blue
brown
K

CIS System
B21F-Turbo
B21F-Turbo Intercooler

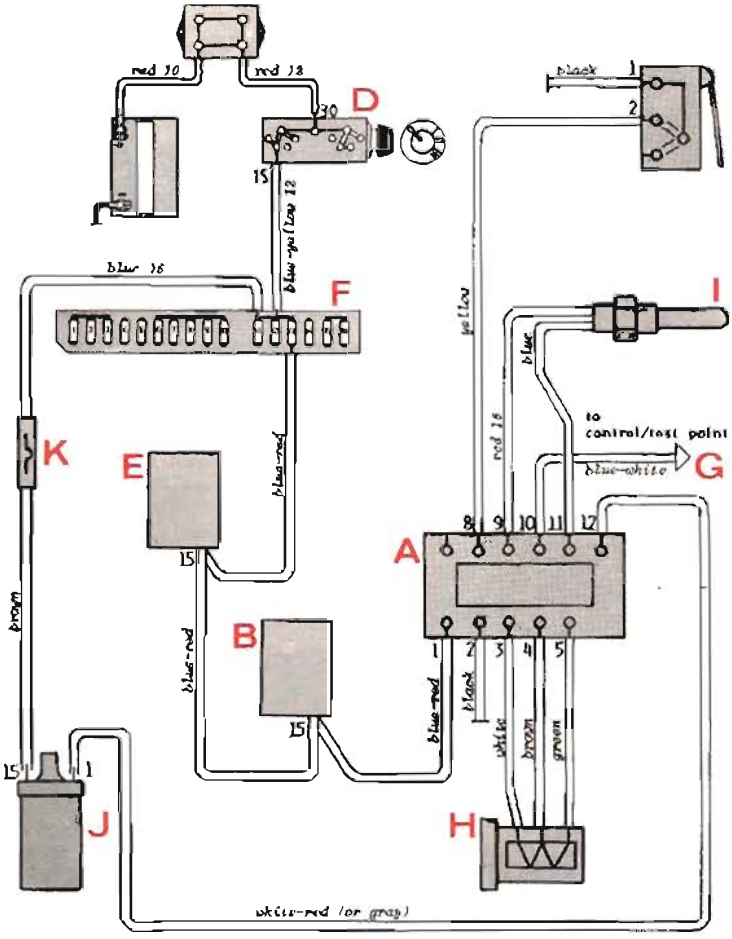

Fuse No. 13:
Instruments
Turn signals
Seat belt warning
CIS System

Legend:
A ECU (Electronic Control Unit)
B Seat belt reminder unit
C Throttle switch
D Ignition switch
E Fuel pump relay
F Fuse box
G Control/test point
H Air control valve
I Coolant temperature sensor
J Ignition coil
K Ballast resistor

General.
Coolant temperature sensor (I) continuously sends a signal to the ECU so it can set an idle speed that corresponds to the coolant temperature.
(G) is designated control/test point. It is a connection that for convenience is used on the production line.

Idle speed.
Ground circuit through throttle switch (C) is interrupted. The Electronic Control Unit (A) (ECU) controls air control valve (H) to set correct idle speed.

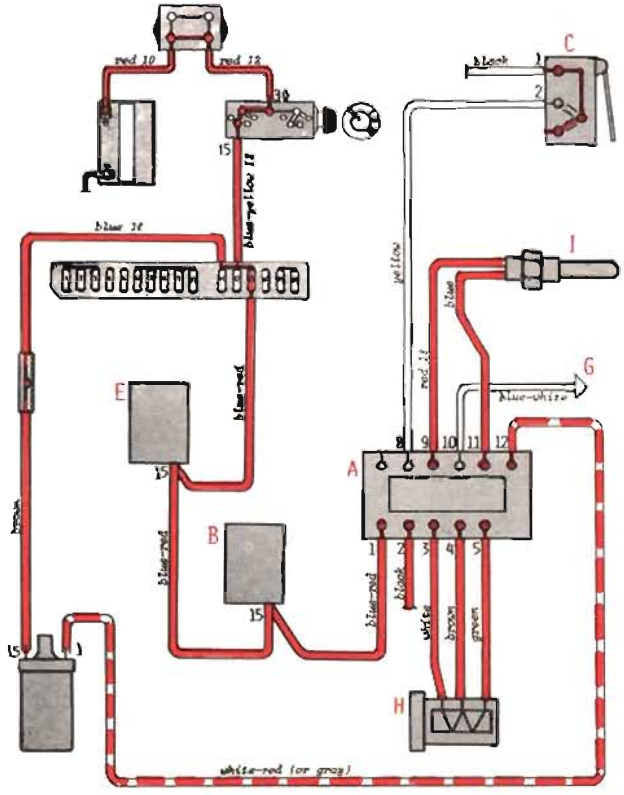

Above idle speed
Ground circuit through throttle switch (C) is closed). ECU (H) controls air control valve (H) to set high air flow (to avoid engine stalls).

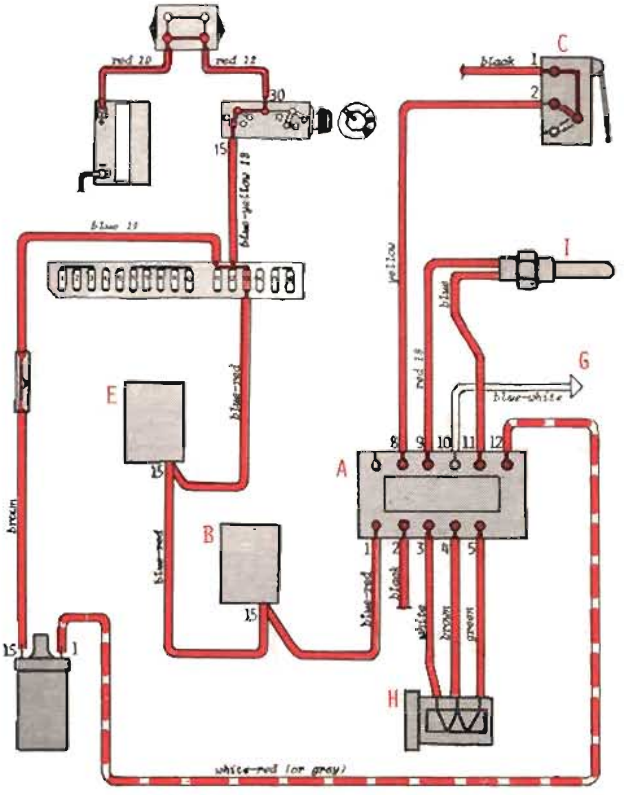

133452

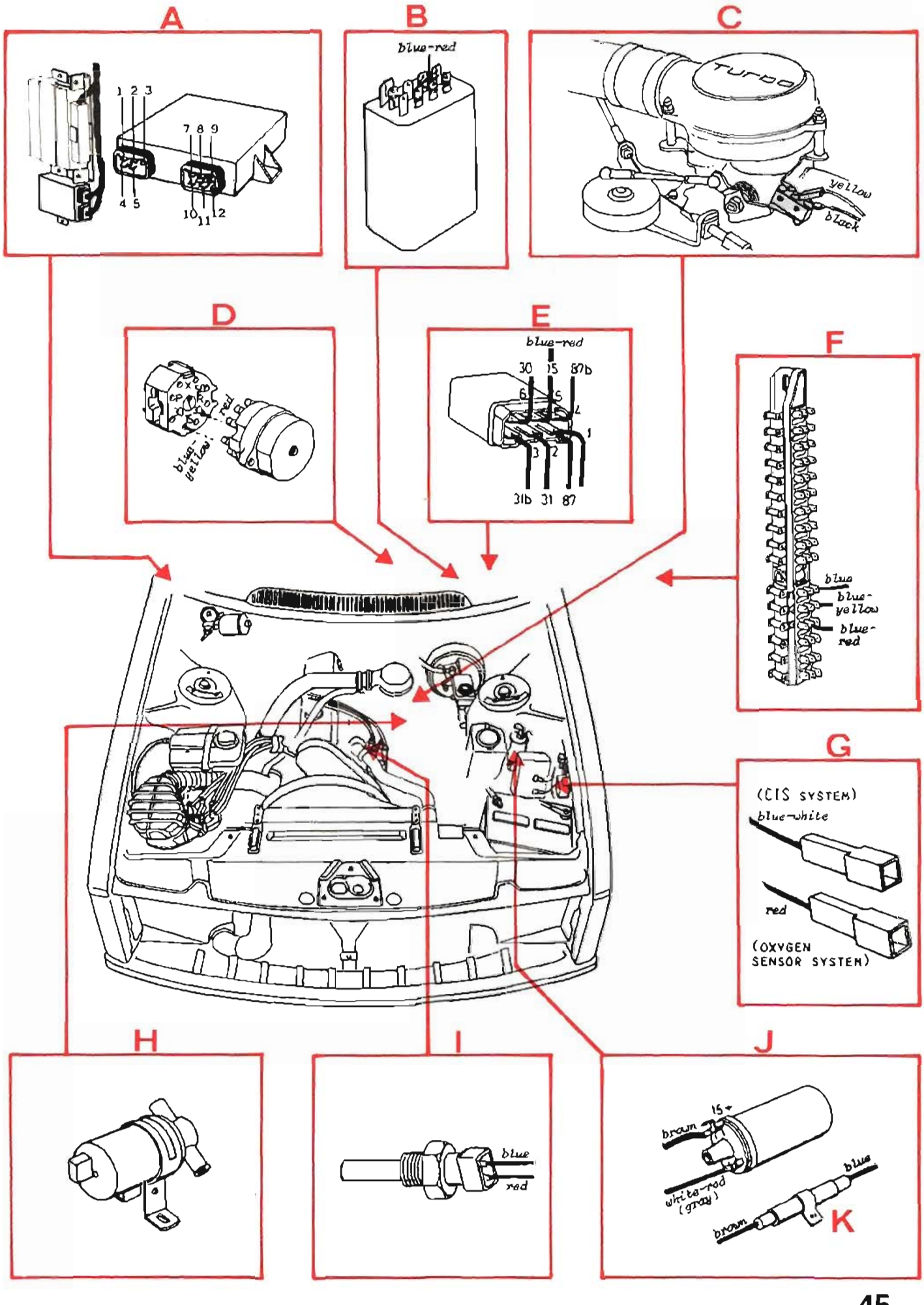
A
1 2 3
7 8 9
4 5
10 11 12
B
blue-red
C
turbo
yellow
black
D
red
blue-yellow
E
blue-red
30 15 87b
6 5 4 1 3 2
31b 31 87
F
blue
blue-yellow
blue-red
G
(CIS SYSTEM)
blue-white
red
(OXYGEN SENSOR SYSTEM)
H
I
blue
red
J
brown
15
white-red (gray)
blue
brown
K

CIS System B28F

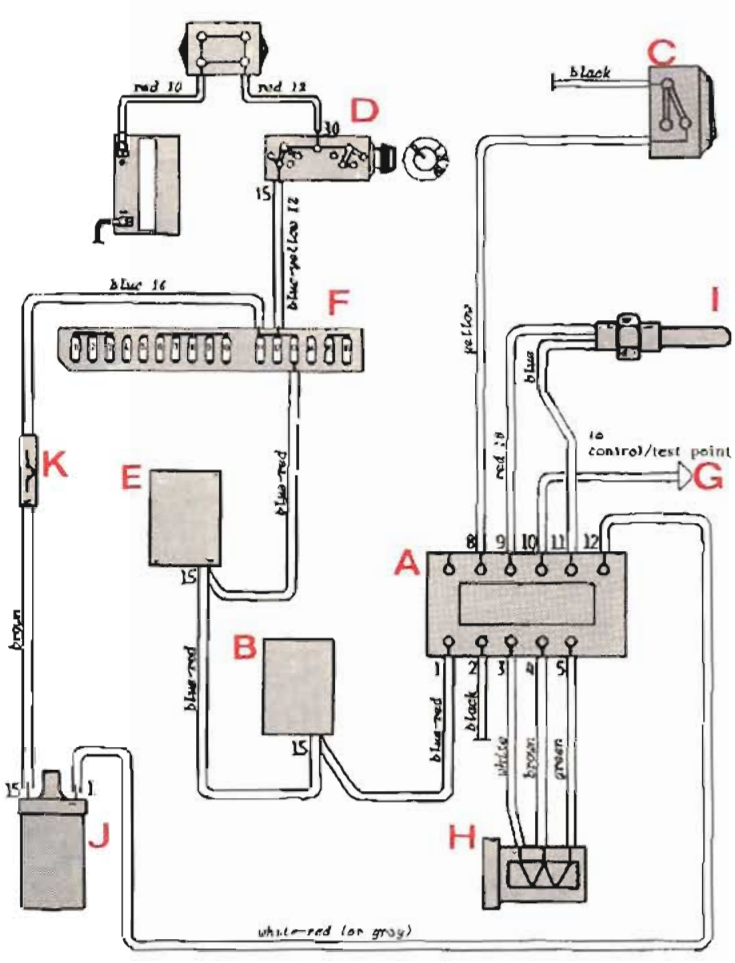

Fuse No. 13:
Instruments
Turn signals
Seat belt warning
CIS System

Legend:
A ECU (Electronic Control Unit)
B Seat belt reminder unit
C Throttle switch
D Ignition switch
E Fuel pump relay
F Fuse box
G Control/test point
H Air control valve
I Coolant temperature sensor
J Ignition coil
K Ballast resistor

General.
Coolant temperature sensor (I) continuously sends a signal to the ECU so it can set an idle speed that corresponds to the coolant temperature.
(G) is designated control/test point. It is a connection that for convenience is used on the production line.

Idle speed.
Ground circuit through throttle switch (C) is interrupted. The Electronic Control Unit (A) (ECU) controls air control valve (H) to set correct idle speed.

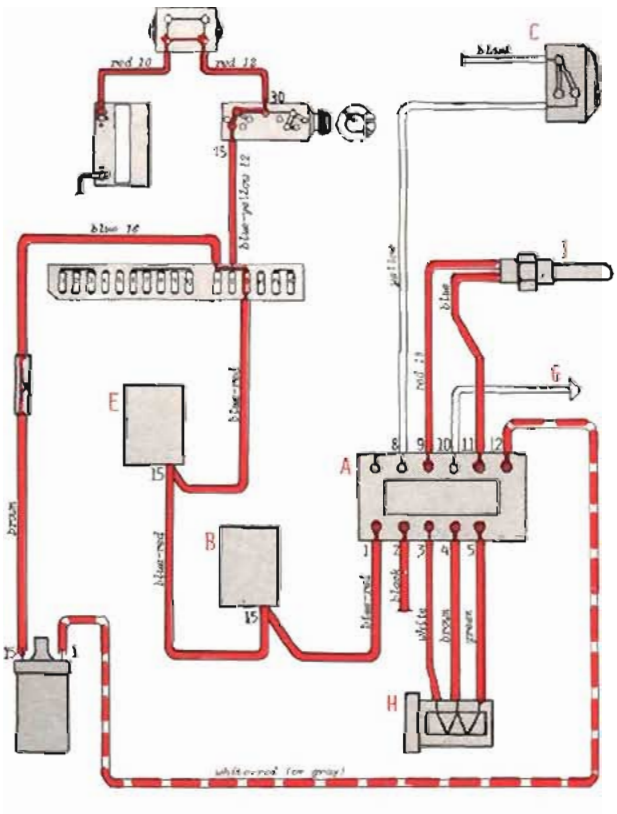

Above idle speed
Ground circuit through throttle switch (C) is closed). ECU (H) controls air control valve (H) to set high air flow (to avoid engine stalls).

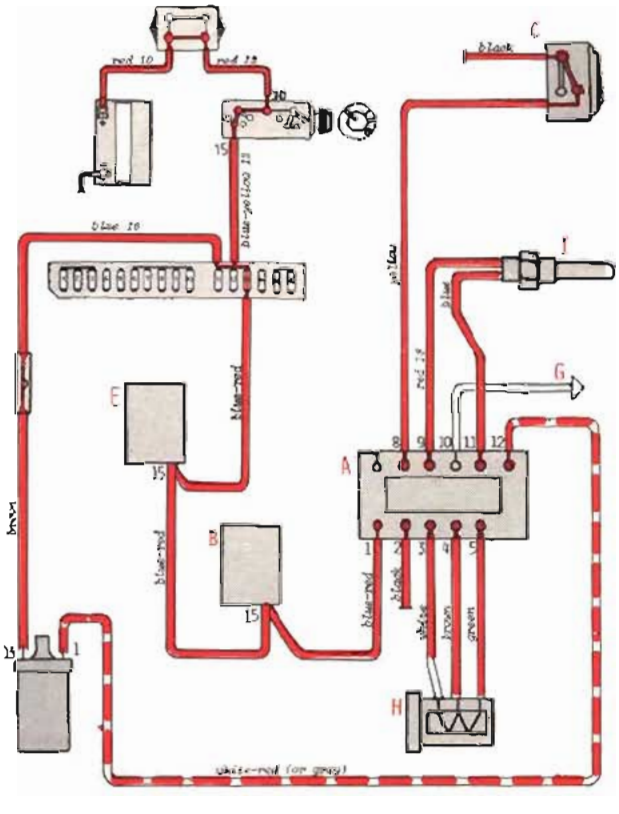

133454

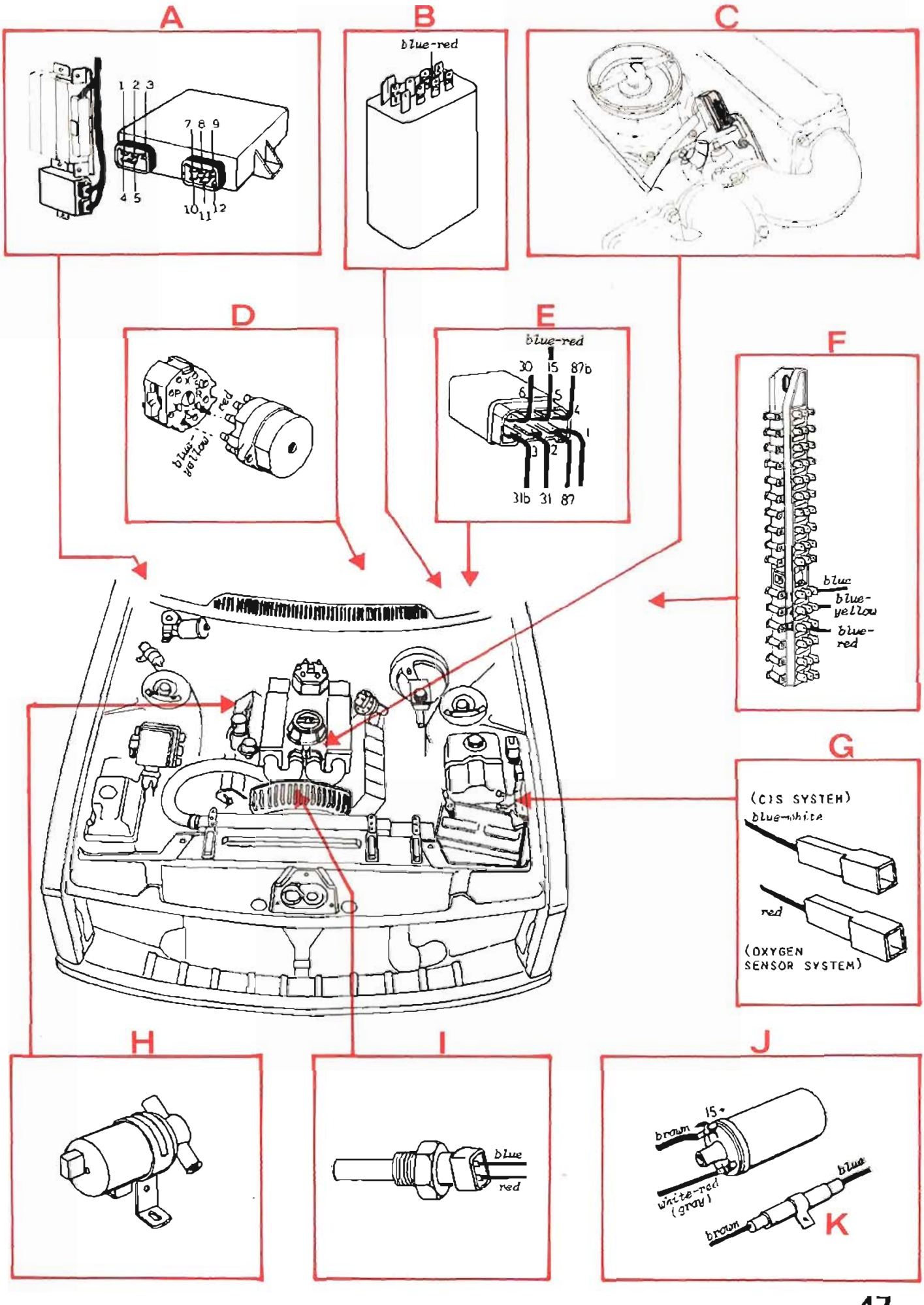
A
1 2 3
4 5
7 8 9
10 11 12
B
blue-red
C
D
red
blue-yellow
E
blue-red
30 15 87b
6 5 4 1 2 3
31b 31 87
F
blue
blue-yellow
blue-red
G
(CIS SYSTEM)
blue-white
red
(OXYGEN SENSOR SYSTEM)
H
I
blue
red
J
15
brown
white-red (gray)
blue
brown
K