Service Manual

Repairs and maintenance

Section 8 (87)

Climate unit
(Heater unit)

240, 260
1975–

VOLVO

Heater unit

This manual deals with the repair and maintenance of the standard and combined (CU) heating systems.

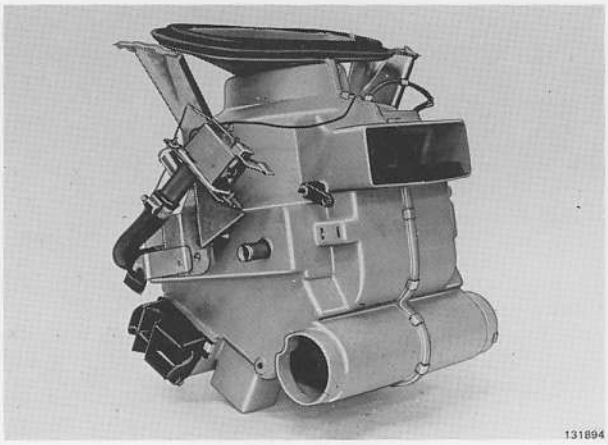

Standard system (except USA–Canada)

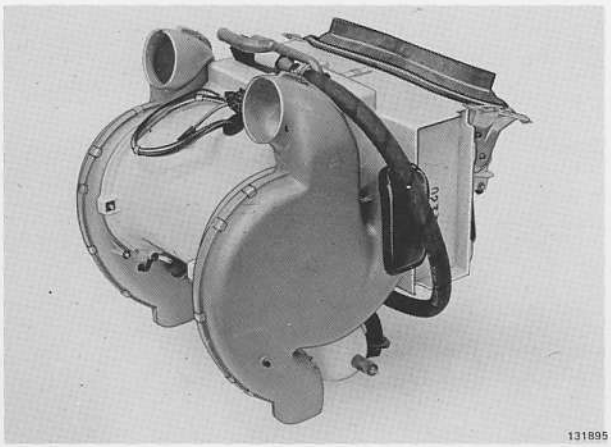

Combined unit (CU) (USA–Canada)

TP 30282/2
4500.12.83
UK/USA
Printed in USA

Contents

Group 87 Climate unit (Heater unit)

	Operation	Page
Standard unit		
Control panel and/or cable, replacement	A1–A10	2
Fan motor switch, replacement	B1–B2	3
Heater, removal	C1–C24	4
Heater, installation	D1–D23	9
Heat exchanger and/or fan motor, replacement (removed heater)	E1–E9	14
Heater control valve, replacement	F1–F20	16
Combined unit (CU) USA–Canada		
Heater control and/or control cable, replacement	G1–G7	21
Control panel and/or fan motor switch, replacement	H1–H7	22
Shutter actuator for rear floor vent, replacement	I1–I6	23
REC-shutter, replacement	J1–J2	24
Heater, removal	K1–K26	25
installation	L1–L21	30
Heat exchanger, replacement (removed heater)	M1–M16	35
Fan motor, replacement	N1–N36	38
Heater control valve, replacement	O1–O6	45
Air distribution 1975–1980	P1–P13	46
1981–	R1–R17	49

Charts

A. Heater controls, standard unit
B. Heater controls, CU
C. Standard heater unit
D. Heater housing, standard unit
E. Combined heater unit, CU
F. Heater housing, CU
G. Hole template, standard unit
H. Conversion table – metric/USA standard

Index page 53

This manual deals with heater units only. Air conditioning is dealt with in another manual.

Volvos are sold in versions adapted for different markets. These adaptions depend on many factors including legal, taxation and market requirements.

This manual may therefore show illustrations and text which do not apply to cars in your country.

Standard unit (except USA–Canada)

A. Control panel and/or cable, replacement

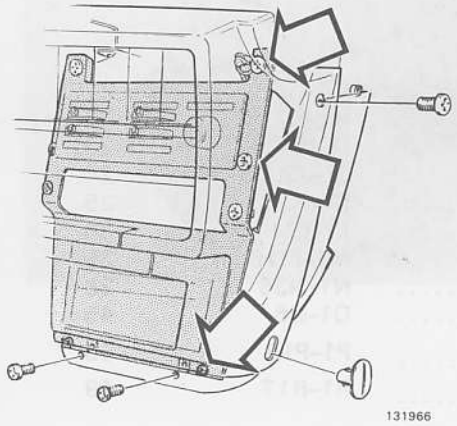

131966

Disconnect

- the ground lead from battery

Remove:

- side panels and sound proofing on both sides
- radio (if installed).

A2

Remove the centre control panel and front panel on central console

A3

Remove the screws securing the control panel mounting

Pull the mounting forward somewhat.

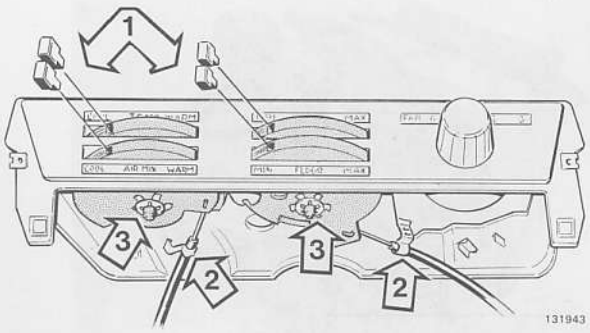

131943

A4

Remove:

- knob (1) on the control where the cable is to be replaced
- cable sheath clip (2)
- locking washer (3)

A5

Slacken the disc and unhook the cable

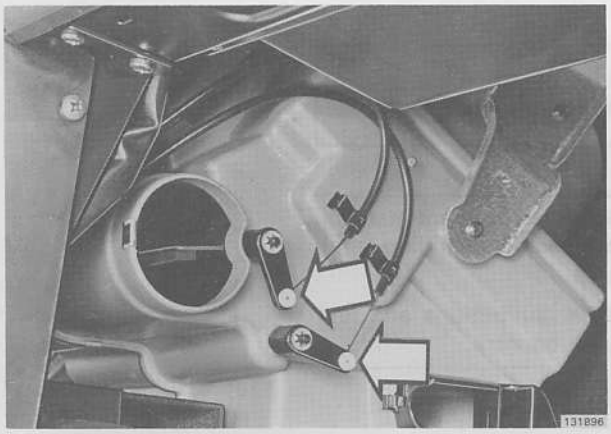

131896

A6

Disconnect the control cable from the shutter

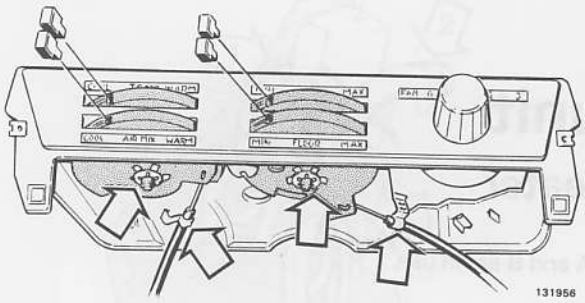

A7

Install:

- cable and disc
- washer
- cable sheath clip
- control knob
- control cable to shutter

A8

Adjust the control cable

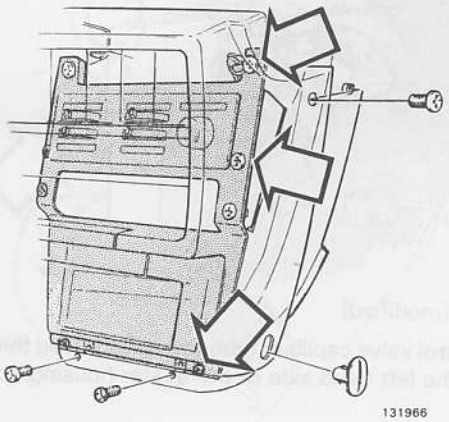

A9

Install:

- control mounting
- front panel for central console and control panel
- radio (if installed)
- side panels and soundproofing on both sides.

A10

Reconnect the battery ground lead

Standard unit

B. Fan motor switch, replacement

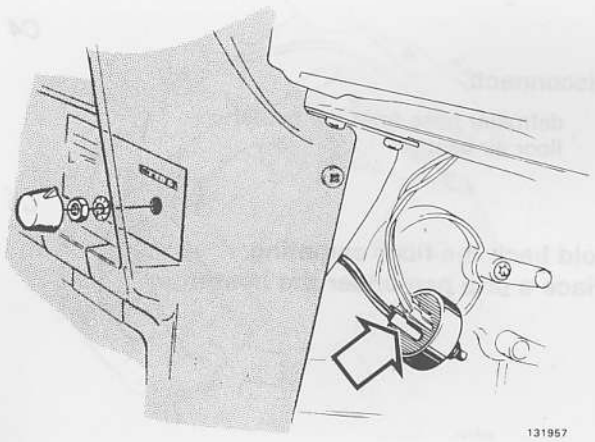

B1

Remove:

- soundproofing and side panels on right hand side.
- control knob and nut. Mark up the cables and disconnect the switch.

B2

Install:

- cable and switch
- side panels and soundproofing

Standard unit

C. Removal of heater

Note: Two different installations, type A and B are in use, see below.

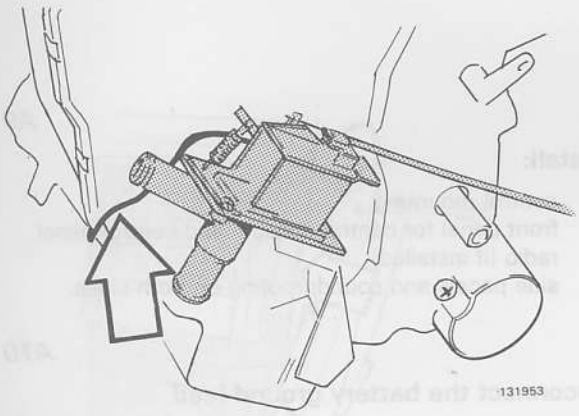

Type A

The heater control valve capillary tube is inserted between both parts of the heater housing, and is connected to the heat exchanger by clips.

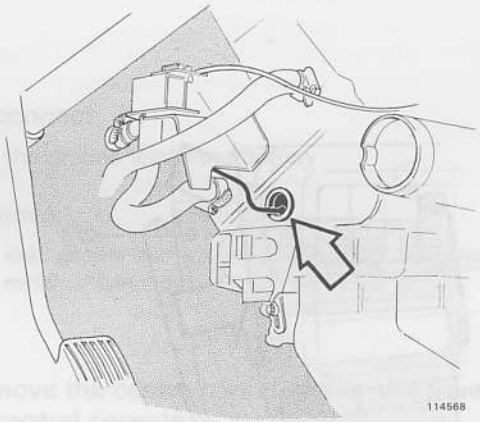

Type B (modified)

The control valve capillary tube can be removed through a hole in the left hand side of the heater housing.

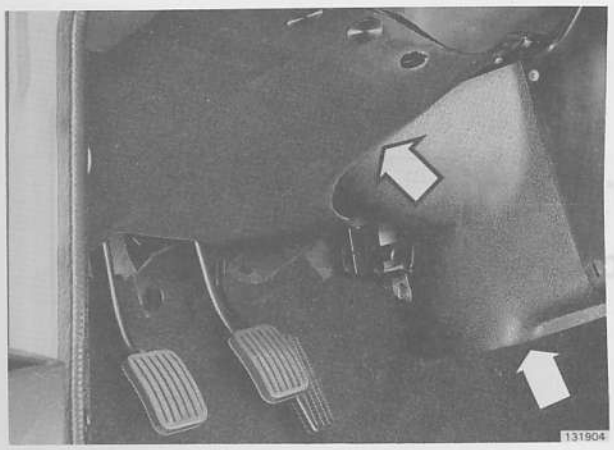

C1

Disconnect the battery ground lead

C2

Move the heater controls to closed position

Left hand side

C3

Remove the side panel and soundproofing

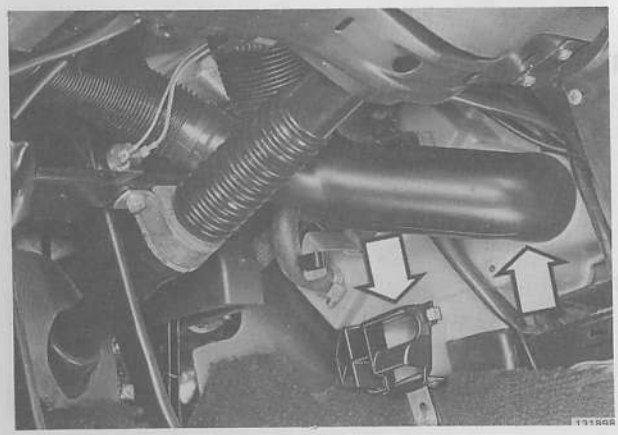

C4

Disconnect:

- defroster hose from the heater
- floor air vent.

C5

Fold back the floor carpeting.
Place a drip pan under the heater

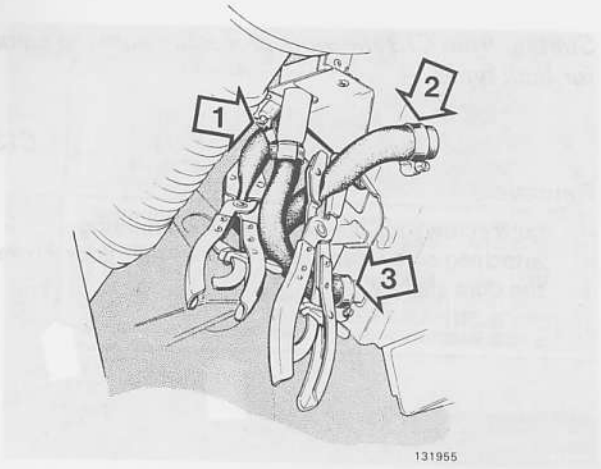

Type A

C6

Attach two hose pliers:

- one to the control valve inlet hose (1)
- the other to the heat exchanger input hose (2).

C7

Disconnect the hoses 1 and 2 as indicated

C8

Disconnect and remove hose 3

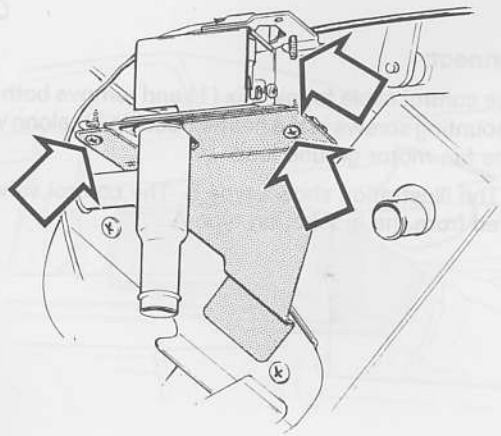

C9

Remove the control valve from the bracket

Disconnect the control cable from the control valve.

Continued at C13.

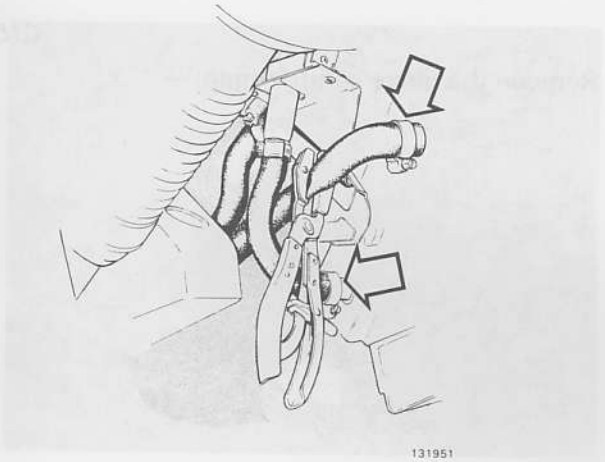

Type B

C10

Attach a pair of hose pliers to the heat exchanger inlet hose

C11

Disconnect the hoses as indicated

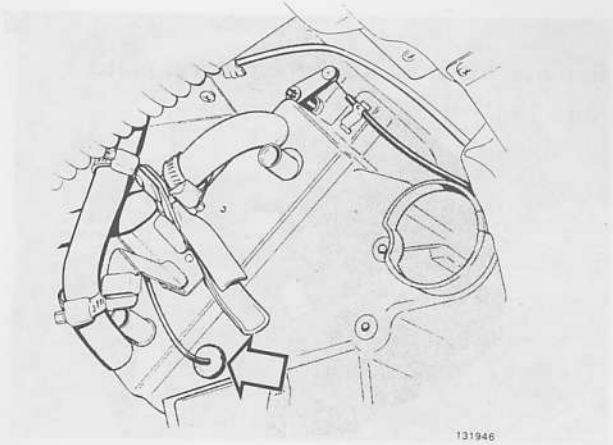

C12

Remove the heater control valve capillary tube from the heater housing. Carefully pull outwards.

Do not remove the control valve from the bracket.

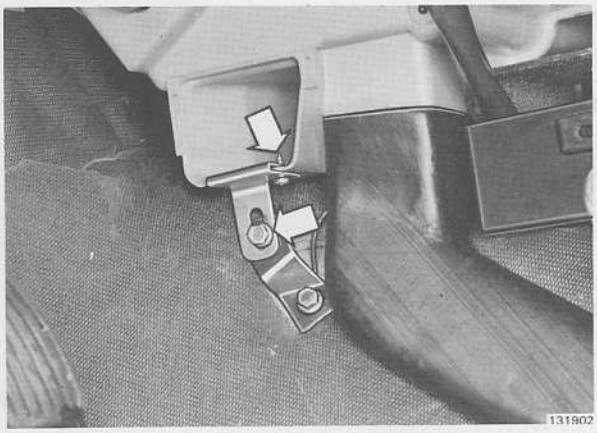

Starting from C13 the work procedures are the same for both types.

C13

Remove:

- both screws for the heater lower mounting
- attaching screw for the air duct to rear floor. Lower the duct slightly.

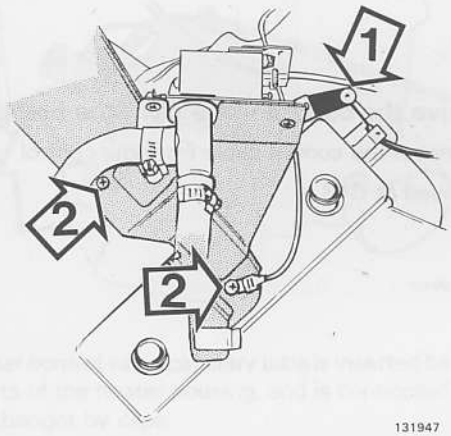

C14

Disconnect:

- the control cable for air-mix (1) and remove both the mounting screws in the heater housing (2) along with the fan motor ground lead.

Note: The illustration shows type B. The control valve is removed from the bracket on type A.

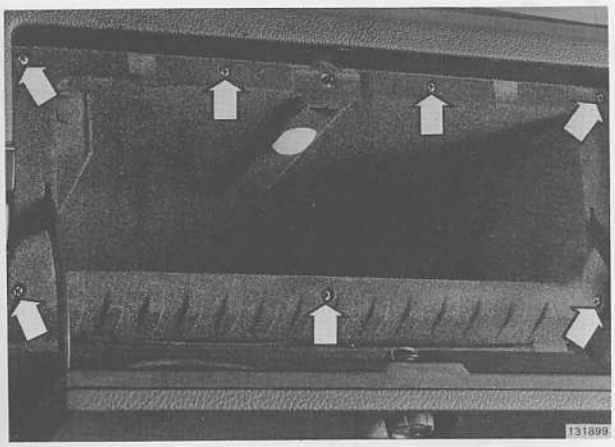

C15

Remove the glove compartment

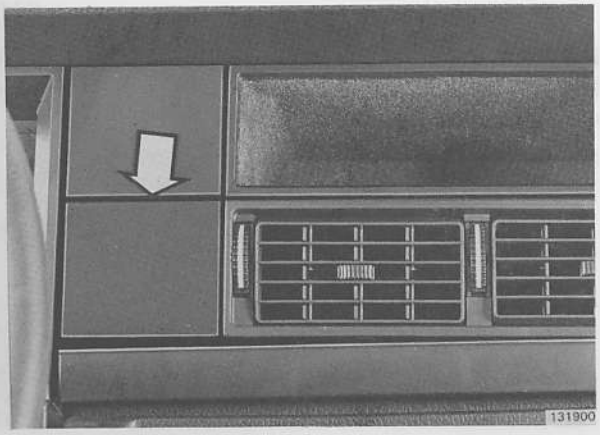

C16

Remove the extra instrument cover plate

Note: 1981-models only.

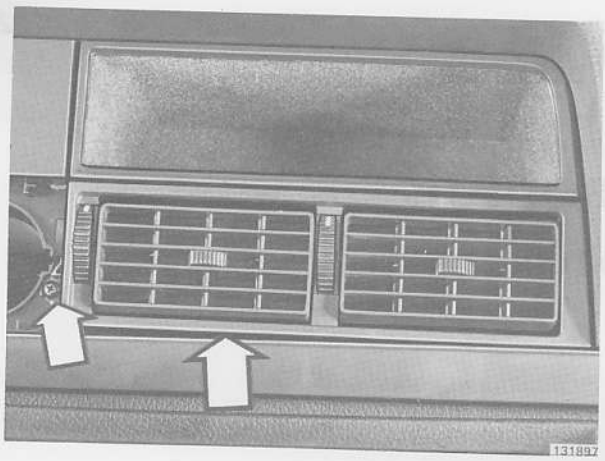

C17

Remove:

- the frame around the centre air vents
- the air vents. They are secured by a screw.

Note: A 1981 model is shown in the illustration. The air vents are secured by two screws in 1975–1980 models. The screws are located under the vents.

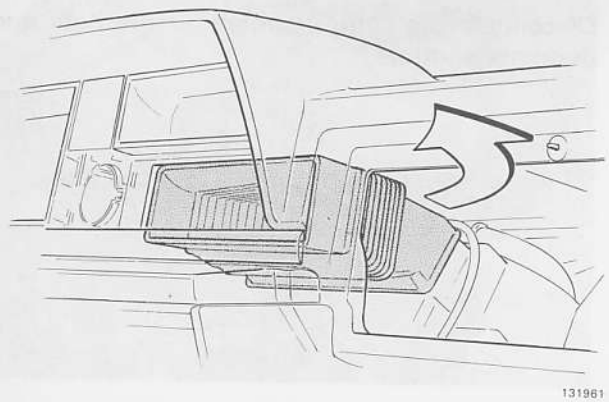

C18

Remove the air duct connecting the heater to the air vents

Note: A 1981 model is shown in the illustration.

Right-hand side

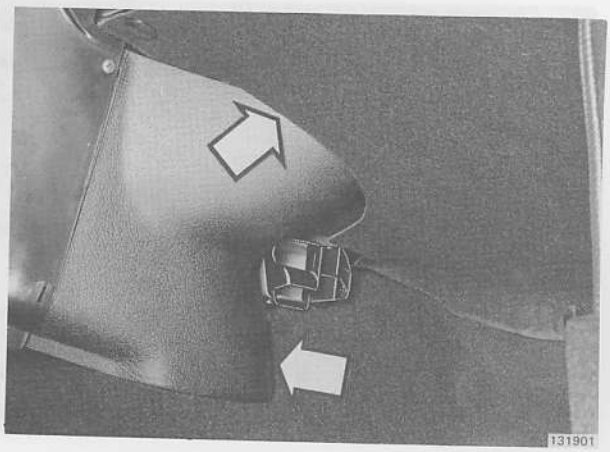

C19

Remove the sound insulation and side panel
Fold back the carpeting

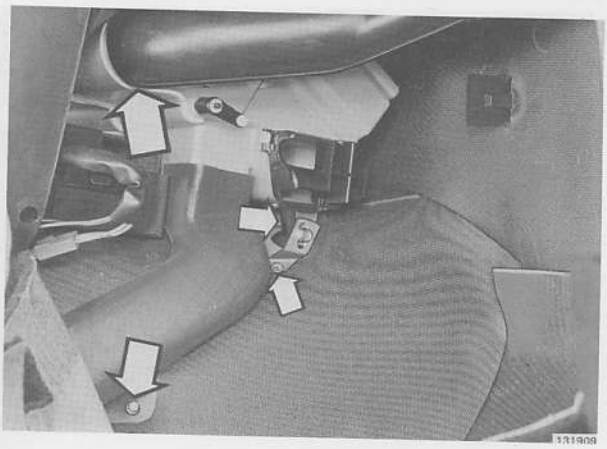

C20

Remove:

- the defroster hose from the heater
- the attaching screws for the rear floor air duct. Lower it slightly
- the screw for the lower mounting on floor
- the heat exchanger drain hose.

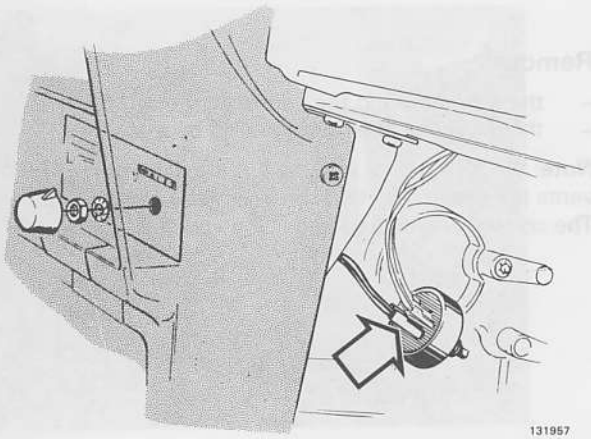

C21

Disconnect:

- fan motor switch from panel
- positive lead from the switch

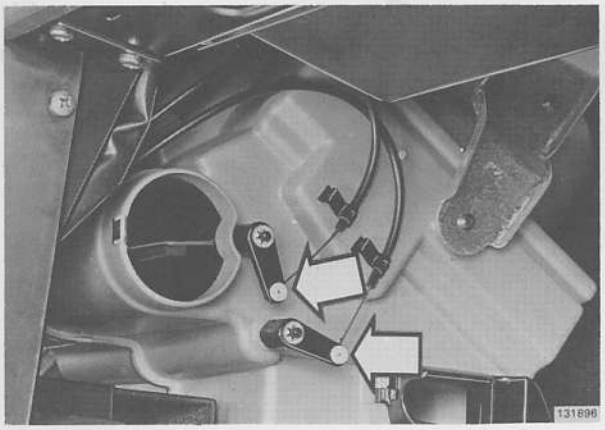

C22

Disconnect the control cables for the floor and defroster shutters

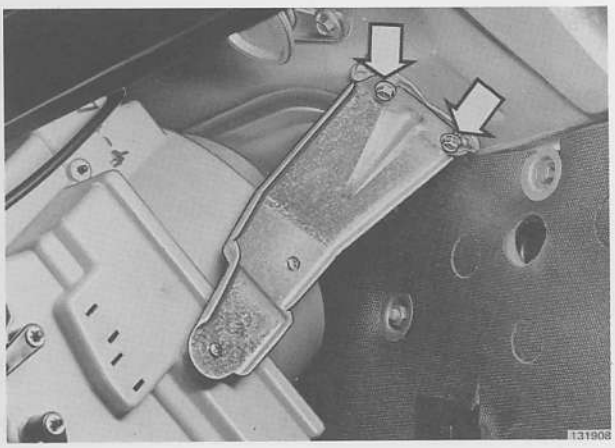

C23

Remove both the screws in the firewall for the upper mounting. Then remove the heater and mounting as one unit.

C24

Remove the heater via right-hand side

For type **A:** the control valve and capillary tube are attached to the heater.
For type **B:** the control valve is mounted on the bracket.

Standard unit

D. Installation of heater

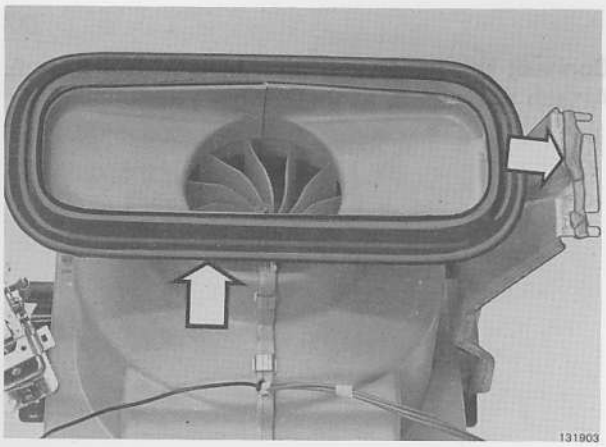

Check before installing the heater that the air inlet seal is intact and correctly installed

D1

Smear sealing cement around the screw holes in the right-hand mounting

NOTE: Make sure when installing the heater that the air intake seal is not displaced.

Note: A type A installation is shown where the control valve and heater are removed and installed as one unit.

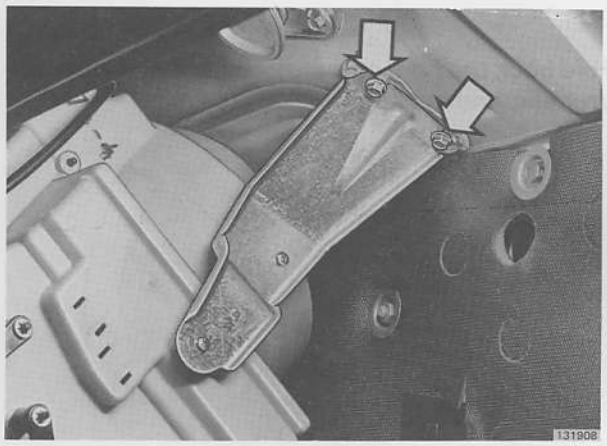

Right-hand side

D2

Install the heater from the right-hand side

D3

Install both upper mounting screws to the fire-wall

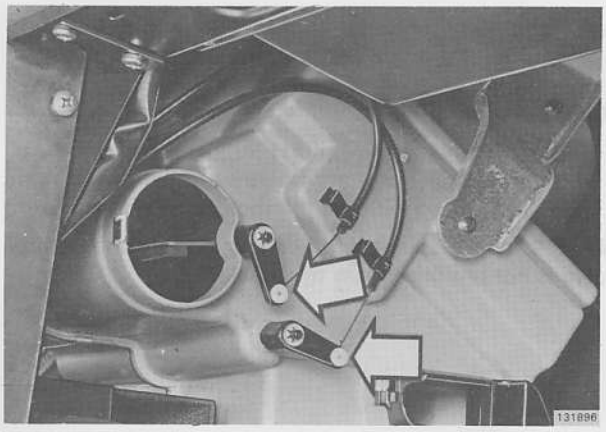

D4

Connect the cables for the floor and defroster shutters. Adjust the shutters.

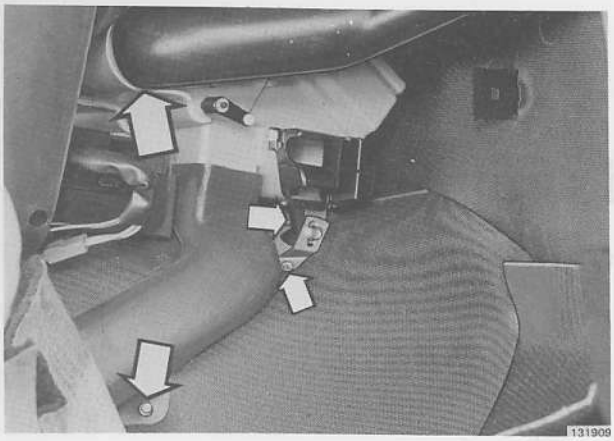

D5

Align the heat exchanger drain hose in the footwell

D6

Install:

- heater lower mounting
- air duct for rear floor
- defroster hose.

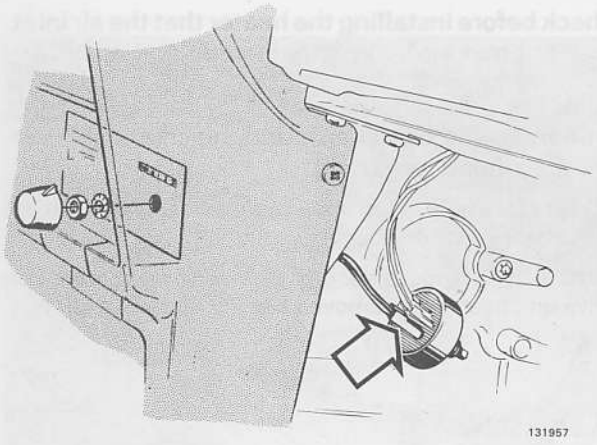

D7

Connect the heater positive lead to the switch. Attach the switch to the control panel

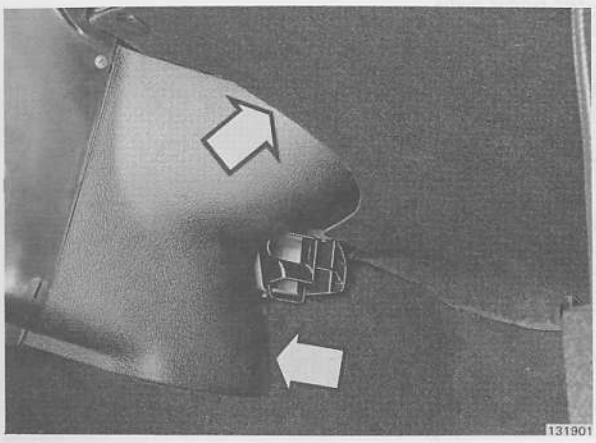

D8

Fold back the floor carpeting. Reinstall the soundproofing and side panel

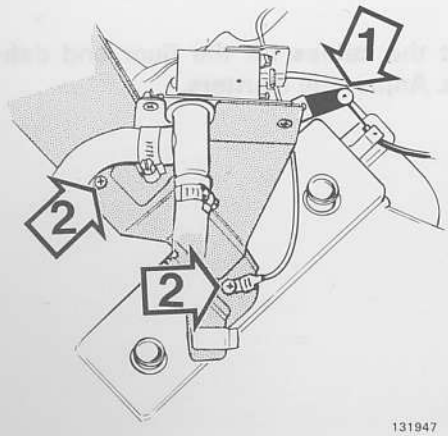

Left-hand side

D9

Install:

- control cable for air-mix (1). Adjust the cable.
- both the upper mounting screws in the heater housing (2) along with the fan motor ground lead.

Note: A type B installation is shown where the control valve is not removed from the bracket.

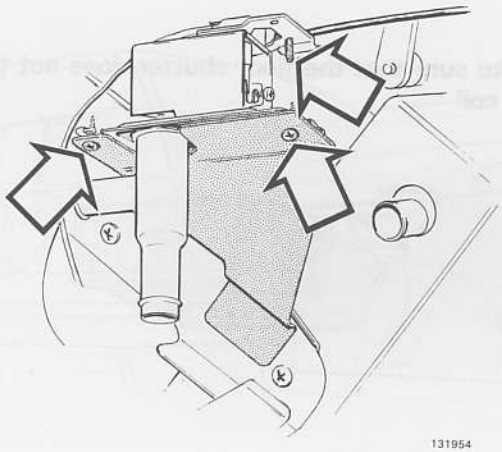

131954

Type A

D10

Connect the control cable to the heater control valve. Adjust the operation. Mount the valve on the bracket

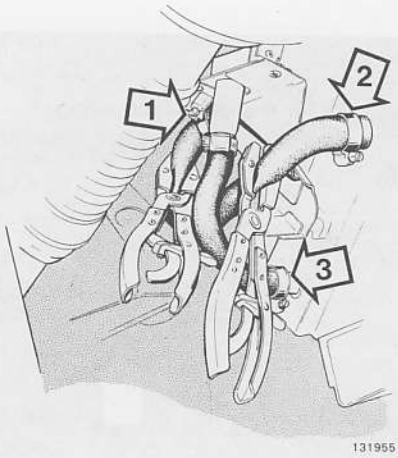

131955

D11

Connect hoses 1, 2 and 3. Remove the hose pliers

Continued at D15.

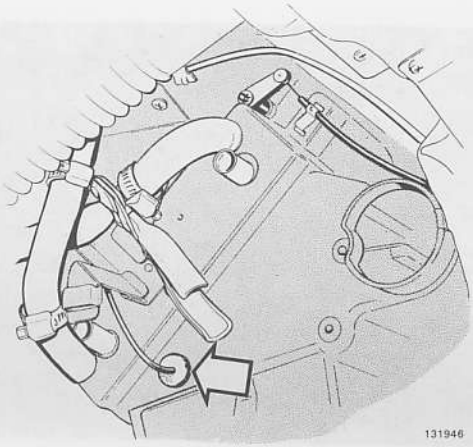

131946

Type B

D12

Insert the control valve capillary tube through the hole in the heater housing. Secure the coil with a rubber plug

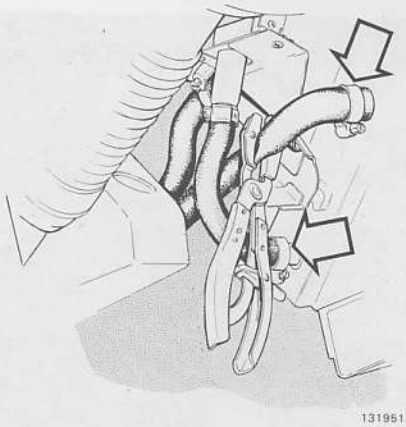

131951

D13

Connect the hoses to the heat exchanger. Remove the hose pliers

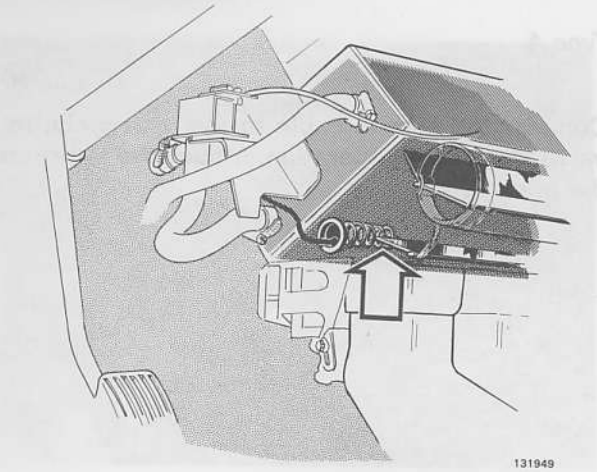

D14

Make sure that the floor shutter does not touch the coil

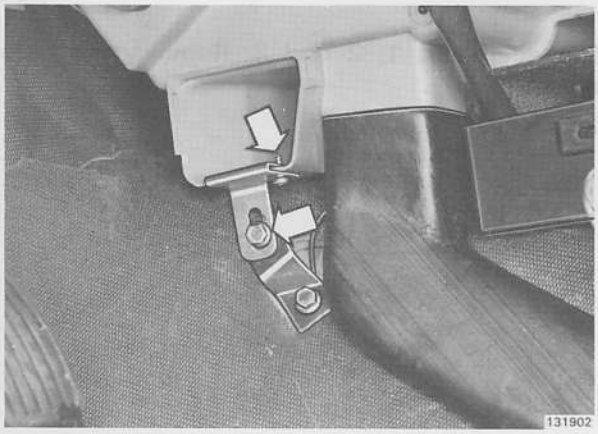

D15

Install:

- both screws for the heater mounting
- the attaching screw for the air duct to the rear floor.

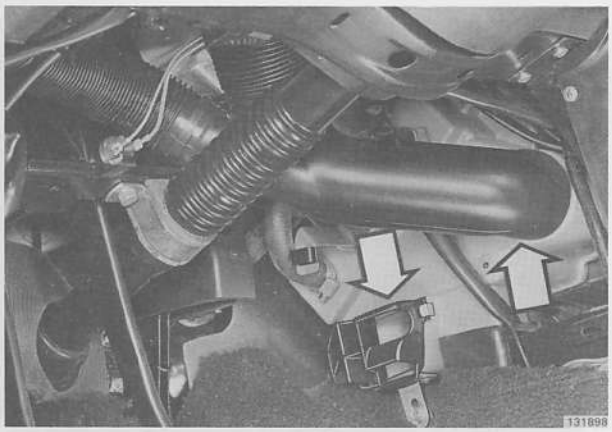

D16

Install:

- the air vent for the front floor
- the defroster hose.

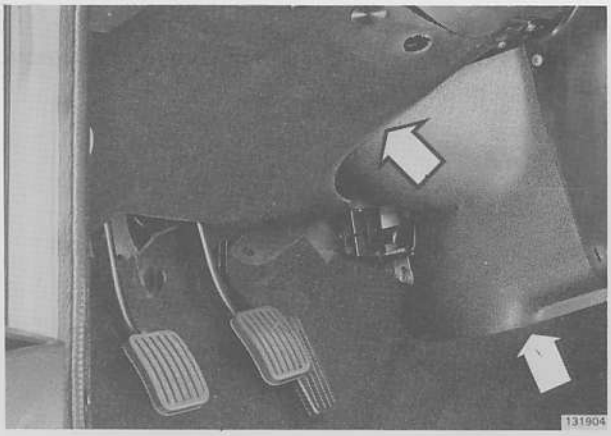

D17

Fold back the floor carpeting. Fit the soundproofing and side panel

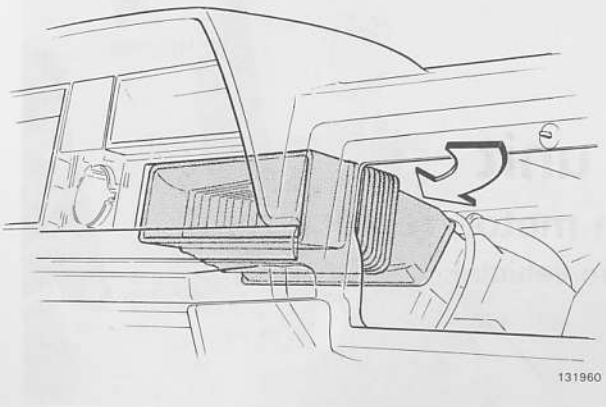

D18

Install the air ducts between the heater and air vents

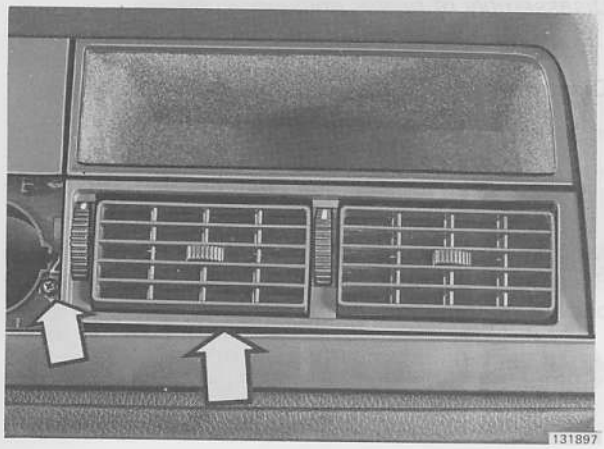

D19

Install:

- the air vents
- the frame around the air vents.

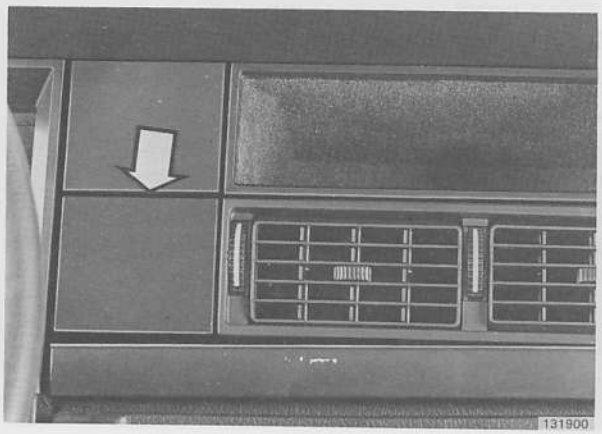

D20

Install the extra instrument cover plate

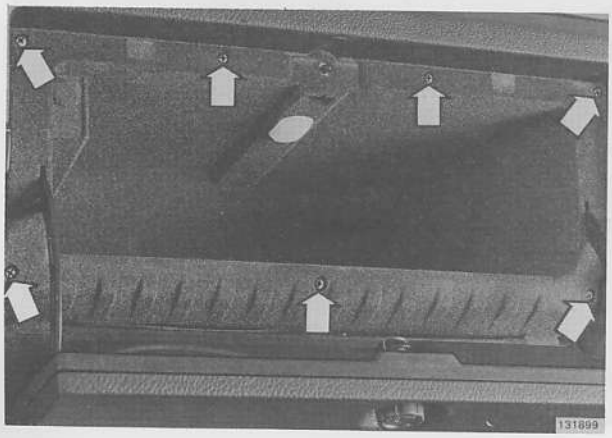

D21

Install the glove compartment

D22

Reconnect the battery ground lead

D23

Check the coolant level and top-up if necessary

Standard unit

E. Heat exchanger and/or fan motor, replacement

(Heater removed from vehicle)

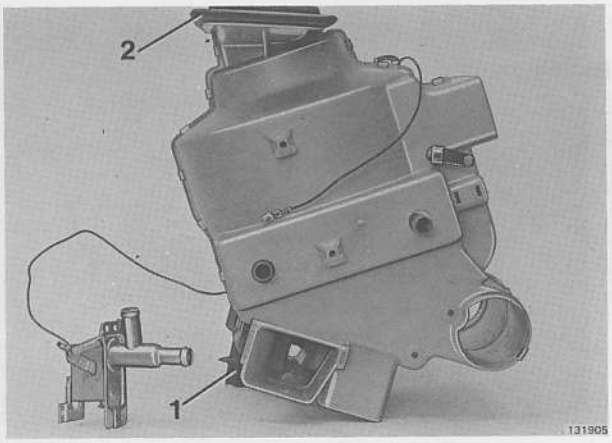

Disassembly of heater housing

E1

Disconnect:

- the heat exchanger drain hose (1)
- the air intake seal (2)
- all clips holding the heater housing halves together.

Note: The illustration shows a type **A** installation. On type **B** versions the control valve remains attached to the bracket.

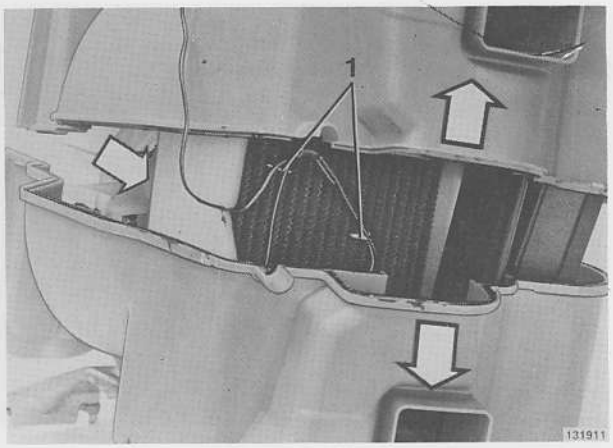

E2

Separate the halves of the heater housing

Remove the clips securing the control valve capillary tube to the heat exchanger (1).

Lift up the heat exchanger. Transfer the seal if the heat exchanger is to be replaced.

Note: The illustration shows a type **A** installation. For type **B** versions the control valve capillary tube is already removed.

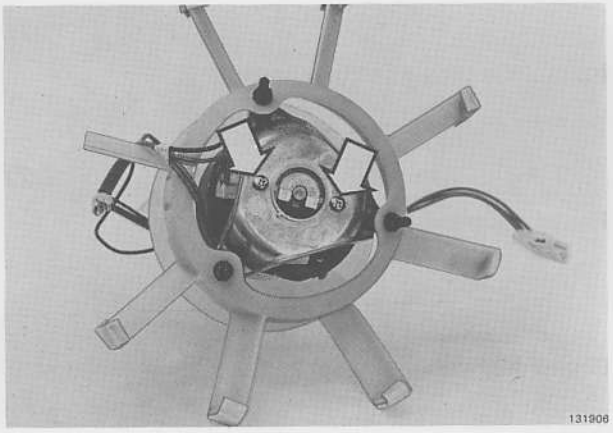

E3

If replacement of fan motor is necessary:

- remove the two screws which secure the fan motor and lift out the motor.

E4

Transfer the fan wheel to the new motor

E5

Attach the fan motor to bracket

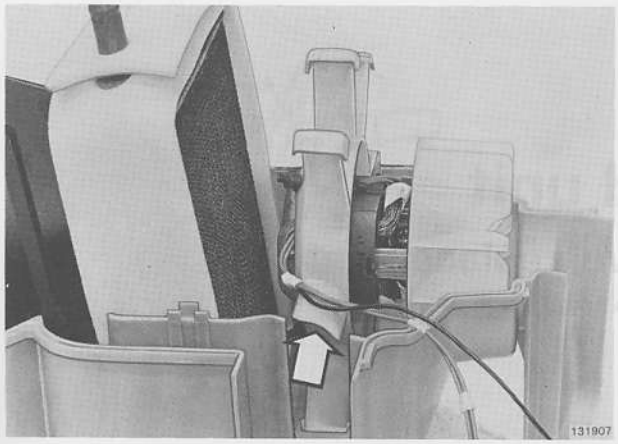

Assembly of heater housing

E6

Install:

- the heat exchanger
- the fan motor.

Note: On assembly make sure that the fan motor holder is located correctly in the heater housing.

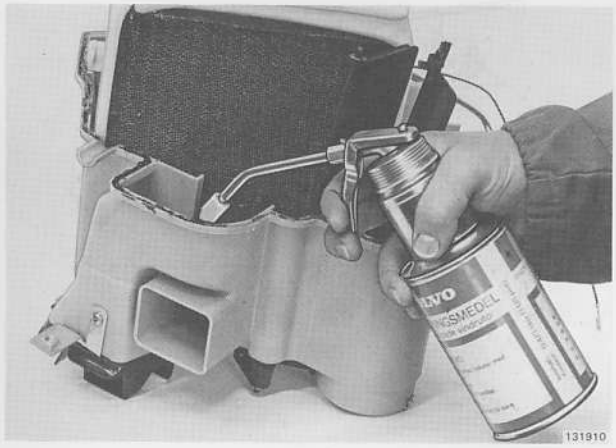

E7

Smear the bottom edge of the heater housing halves with Volvo sealant Part No. 686 275–9.

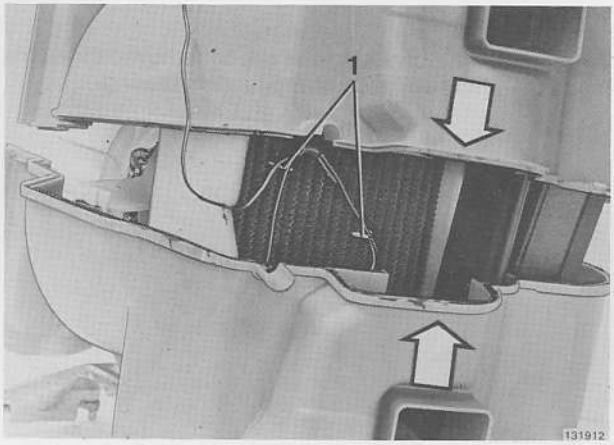

E8

Install:

- the heater control valve capillary tube and clips (1) to the heat exchanger. Press together the heater housing halves.
- all clips for the heater housing halves

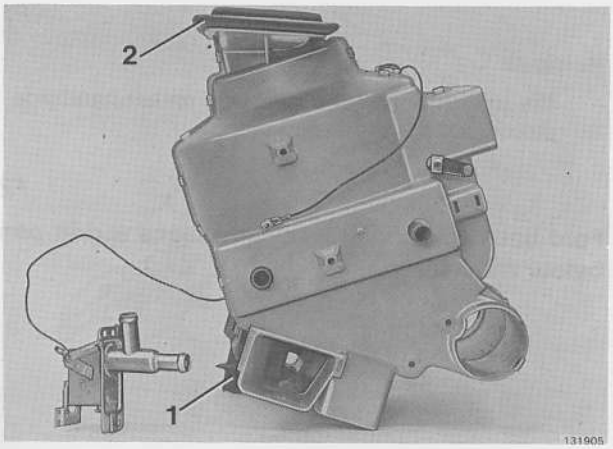

E9

Connect:

- the heat exchanger drain hose (1)
- the air intake seal (2)

Note: On assembly of the heater housing, modifications can be made so that it is possible to remove and install the control valve capillary tube directly through the left-hand side of the heater housing. See operations F9–F20 for further information.

Standard unit

F. Heater control valve, replacement

Note: Two different installations, type **A** and **B** are in use, see below.

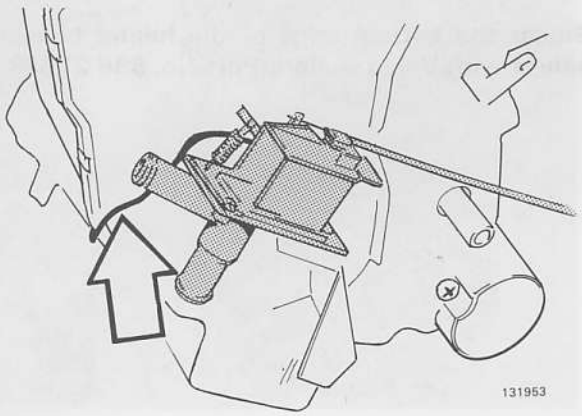

Type A
The heater control valve capillary tube is inserted between both parts of the heater housing and is connected to the heat exchanger by clips.

On replacement of the control valve, modifications should be made to convert the installation to type **B.**

For details see operation **F9** onwards.

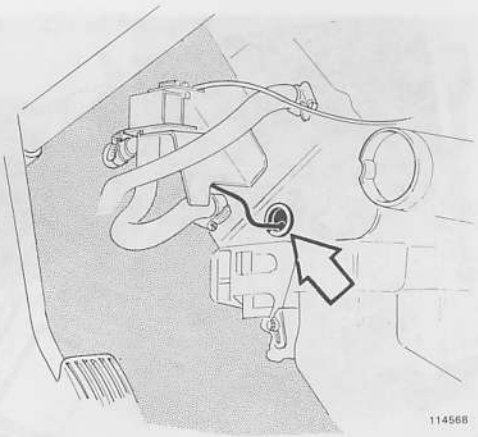

Type B (modified)
The control valve capillary tube can be removed through a hole in the left hand side of the heater housing.

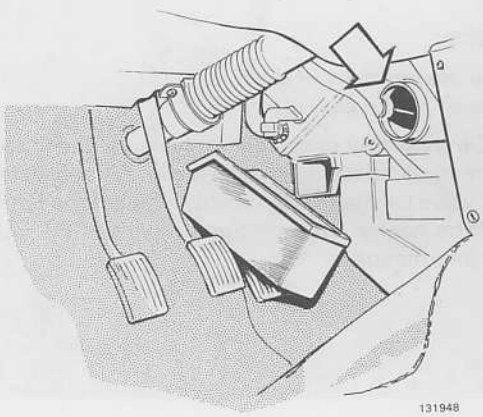

F1

Remove:

- the soundproofing and sidepanel on left-hand side
- disconnect the defroster hose

F2

Fold back the floor carpet and place a drip pan below the heater

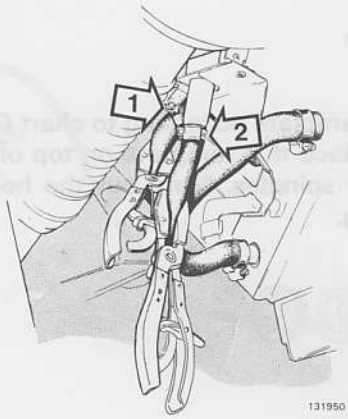

Type A

F3

Attach two hose pliers

- one pair to the control valve inlet hose (1)
- the other to the control valve outlet hose (2)

F4

Disconnect the hoses indicated

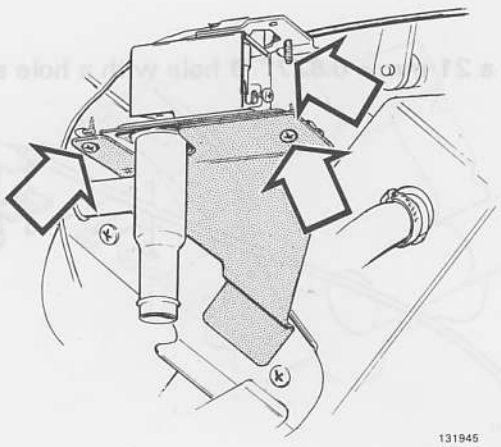

F5

Remove the control valve from the bracket

Cut off the capillary tube behind the heater and leave the rest on the heater.

Remove the control valve mounting screws and disconnect the control cables.

For modification continue from F9.

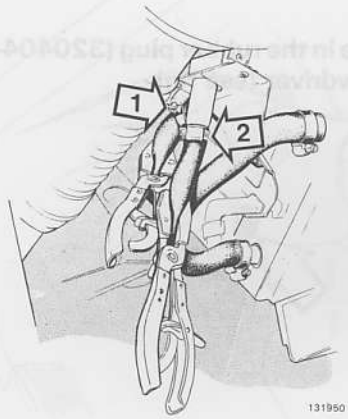

Type B (modified)

F6

Attach two hose pliers:

- one pair on the control valve inlet hose (1)
- the other on the control valve outlet hose (2)

F7

Disconnect the hoses indicated

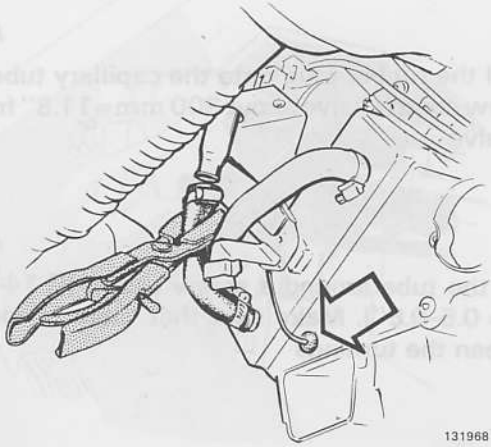

F8

Remove the control valve from the bracket

Carefully pull out the capillary tube and rubber plug from the housing.

Remove the control valve and disconnect the control cable.

Continue from F12.

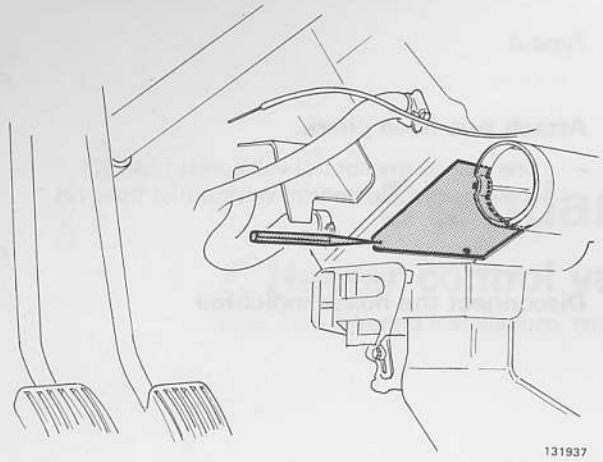

131937

Modification

F9

Cut out a template according to chart G. (back of manual). Place this template on top of holes for the shutter spindles. Mark out the hole for the rubber plug.

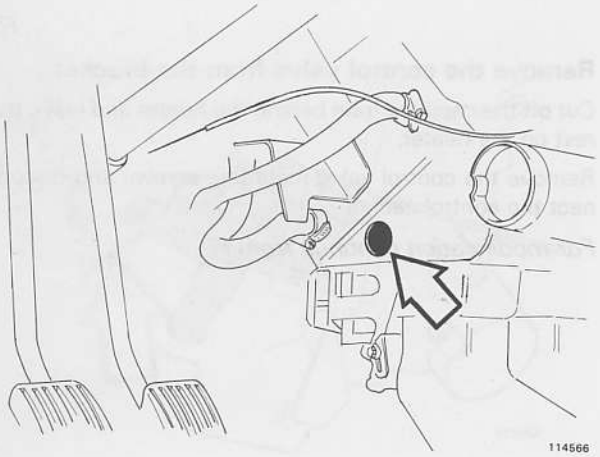

114566

F10

Cut a 21 mm = 0.827" Ø hole with a hole saw

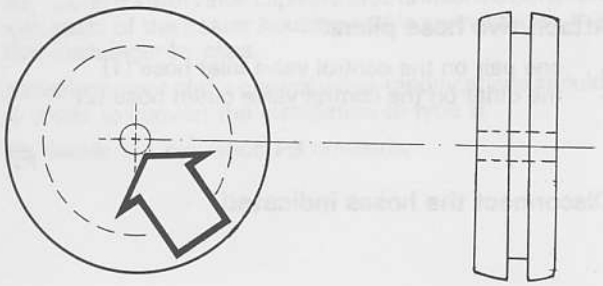

114562

F11

Make a hole in the rubber plug (320404–7) with a small screwdriver (see fig).

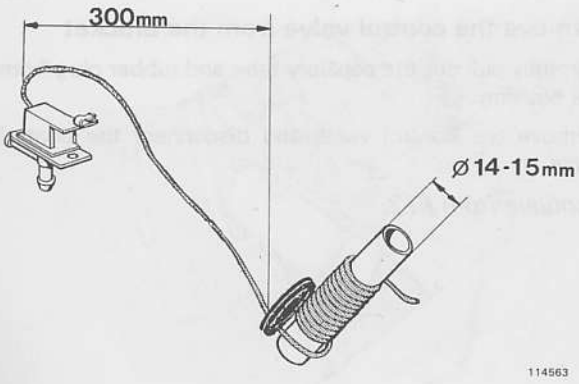

114563

F12

Install the rubber plug onto the capillary tube of the new control valve about 300 mm = 11.8" from the valve

F13

Wind the tube around a screw or rod (Ø 14–15 mm = 0.5–0.6"). Make sure that there is space between the turnings

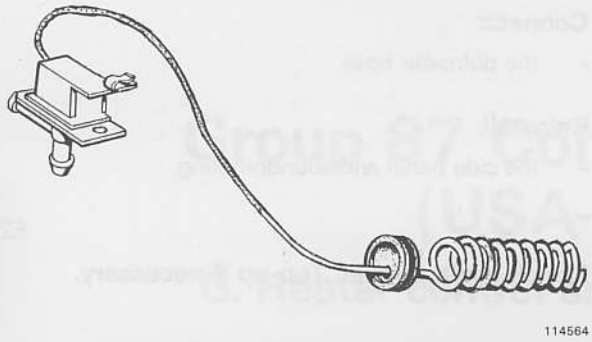

114564

F14

Bend the tube as illustrated

Installation

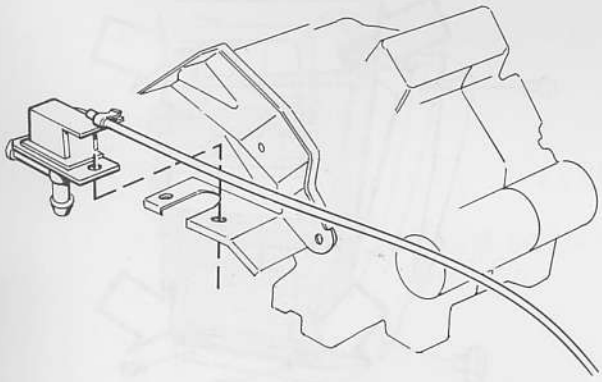

114567

F15

**Connect the control cable and transfer the clip from the old to the new control valve.
Adjust the cable.**

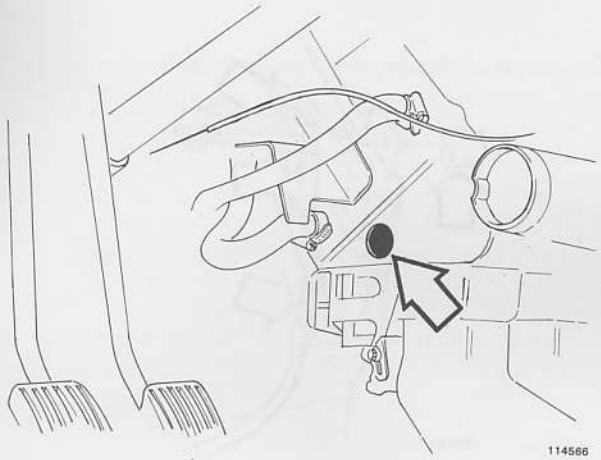

114566

F16

Insert the capillary tube through the drilled hole in the side of the heater. Secure it with the rubber plug

F17

Connect the water hoses. Remove the hose pliers

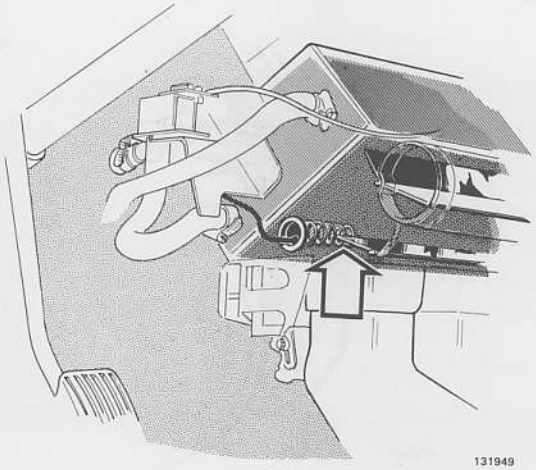

131949

F18

Make sure that the floor shutter does not rub against the capillary tube

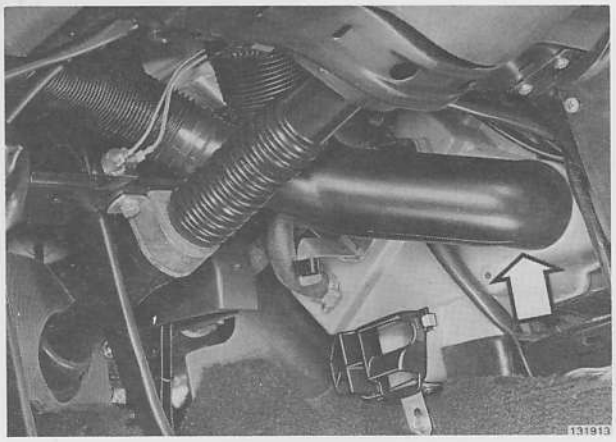

F19

Connect:

- the defroster hose

Reinstall:

- the side panel and soundproofing.

F20

Check coolant level. Top-up if necessary.

Group 87 Combined unit (CU) (USA–Canada)

G. Heater control and/or cable, replacement

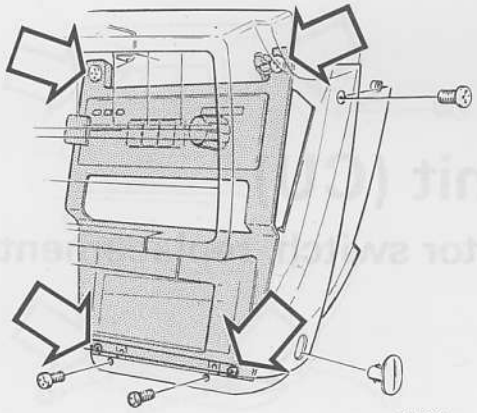

131969

G1

Disconnect the battery ground lead

G2

Remove:

- soundproofing and side panels on both sides
- radio (if installed)
- centre control panel, move to one side
- central console, front side. Pull as far forward as possible.

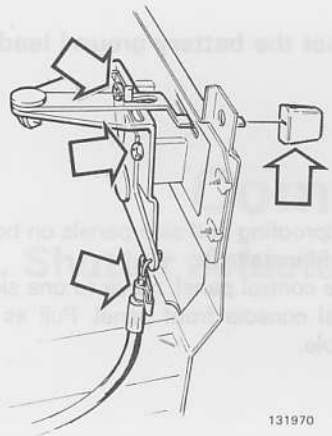

131970

G3

Remove the lever knob and disconnect the cable from the lever and control valve

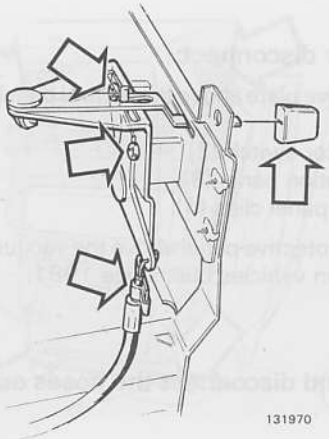

131970

G4

Connect the cable and reinstall the lever knob

G5

Adjust the operation

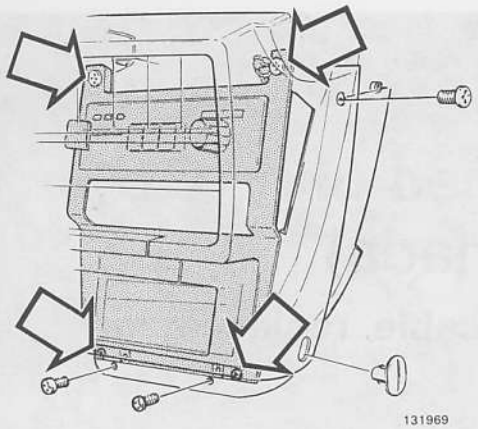

G6

Reinstall:

- central console front panel
- centre control panel
- radio (if installed)
- side panels and soundproofing on both sides.

G7

Reconnect the battery ground lead.

Combined unit (CU)

H. Control panel and/or fan motor switch, replacement

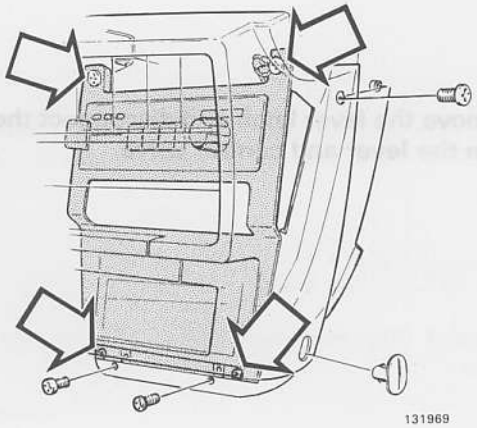

H1

Disconnect the battery ground lead

H2

Remove:

- soundproofing and side panels on both sides
- radio (if installed)
- centre control panel, move to one side
- central console front panel. Pull as far forward as possible.

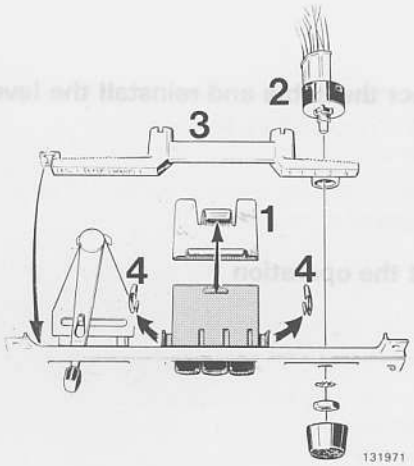

H3

Remove or disconnect:

- protective plate above the control panel vacuum hose (1)
- fan motor switch (2)
- illumination panel (3)
- control panel clips (4).

Note: The protective panel above the vacuum hoses is not removable on vehicles built since 1981.

H4

Mark up and disconnect the hoses on the control panel

Shutter actuator for rear floor vent, replacement

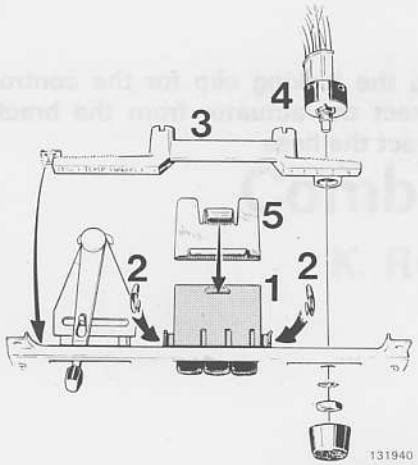

131940

H5

Connect:

- the vacuum hoses to the control panel
- panel (1) and clips (2)
- illumination panel (3)
- fan motor switch (4)
- protective panel above the vacuum hoses (5).

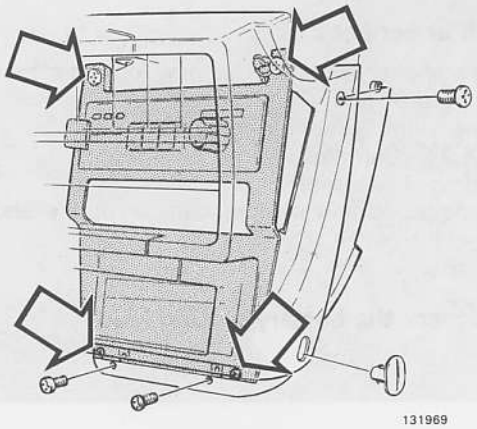
131969

H6

Install:

- central console front panel
- centre control panel
- radio (if installed)
- side panels and soundproofing on both sides.

H7

Reconnect battery ground cable.

Combined unit (CU)

I. Shutter actuator for rear floor vent, replacement

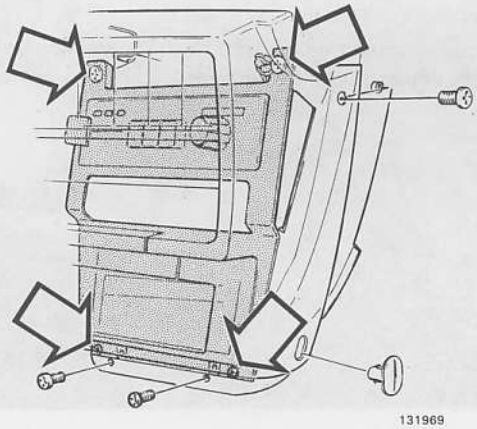
131969

I1

Disconnect the battery ground lead

I2

Remove:

- soundproofing and side panels on both sides
- radio (if installed)

I3

Free the centre control panel and front panel of central console

Pull it as far forward as possible to free it from the radio compartment. It may be necessary to detach the radio compartment.

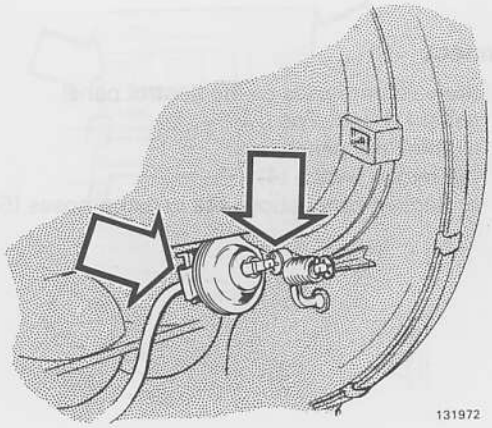

I4

Remove the locking clip for the control valve. Disconnect the actuator from the bracket and disconnect the hose

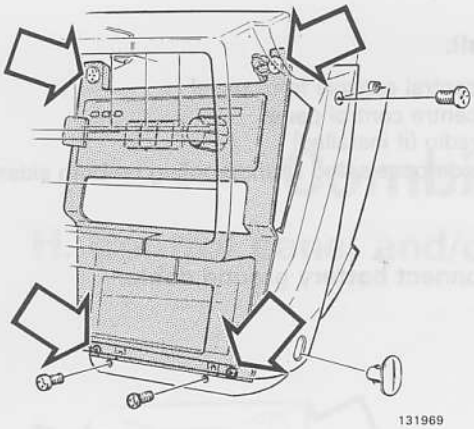

I5

Install or connect:

- the shutter actuator. Use new locking clips for the control lever
- the central console front panel
- centre control panel
- radio (if installed)
- side panels and soundproofing on both sides.

I6

Reconnect the battery ground lead

Combined unit (CU)

J. REC-shutter actuator, replacement

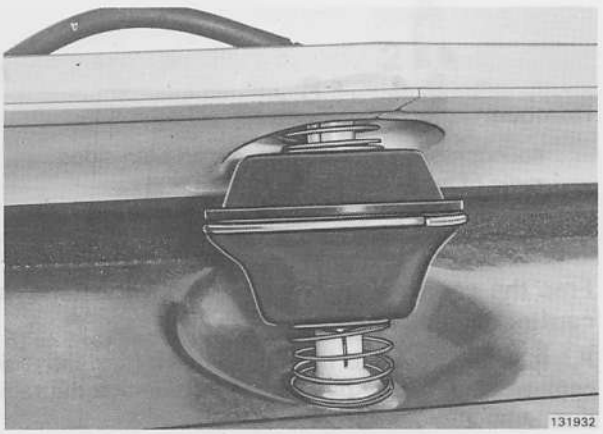

The heater must be removed from the vehicle before the shutter actuator can be removed.

Combined unit (CU)

K. Removal of heater

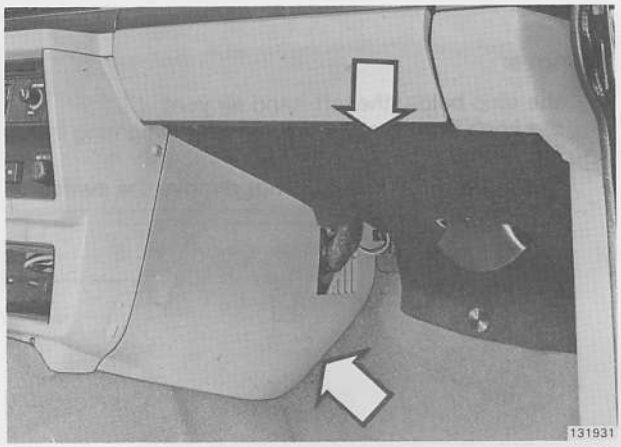

K1

Disconnect the battery ground lead

K2

Move heater controls to closed position

K3

Remove soundproofing and side panels on both sides

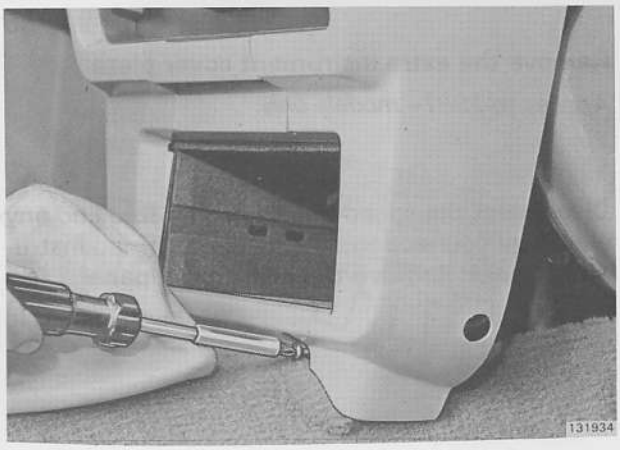

K4

Remove:

- radio (if installed)
- centre control panel. Disconnect any cables and move the panel to one side.

Note: If the vehicle has an air conditioning system, take care to avoid damage to the heater capillary tube (heat sensor).

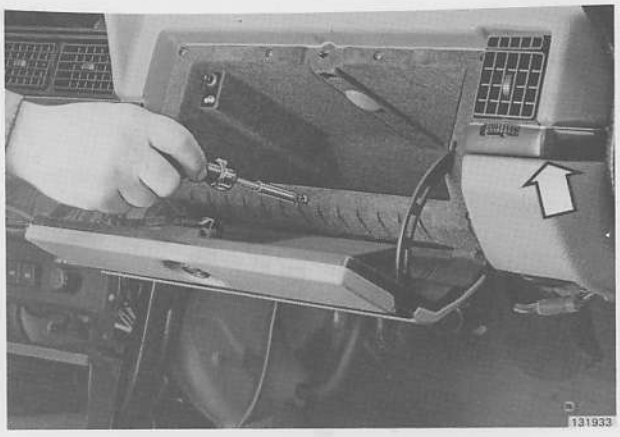

K5

Remove:

- the glove compartment
- the strip below the right-hand air vent. Carefully pry off with a screwdriver.



K6

Remove the steering wheel casings and disconnect the choke control (coverplate).

Note: For vehicles with the CI (fuel injection) system, remove the coverplate for the choke.

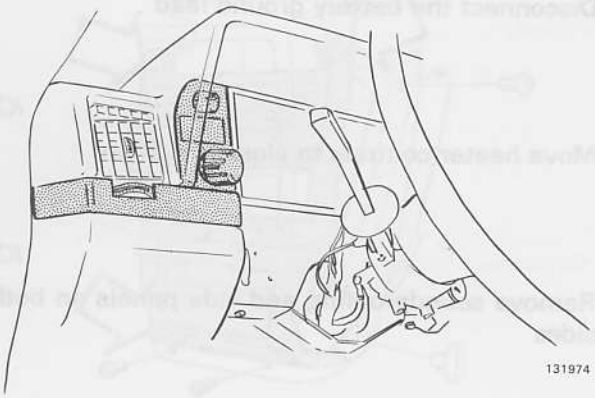

K7

Remove:

- the strip below the left-hand air vent
- the knob for adjusting the instrument lighting intensity
- the light switch knob. Do not remove the switch.

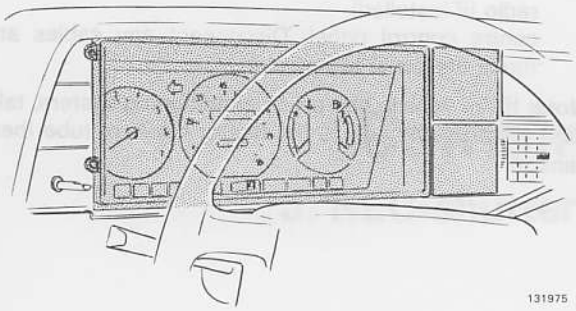

K8

Remove the extra instrument cover plate

Applies to 1981– models only.

K9

Disconnect the speedometer drive cable and any electrical connections from the combined instrument panel. Remove the instrument panel

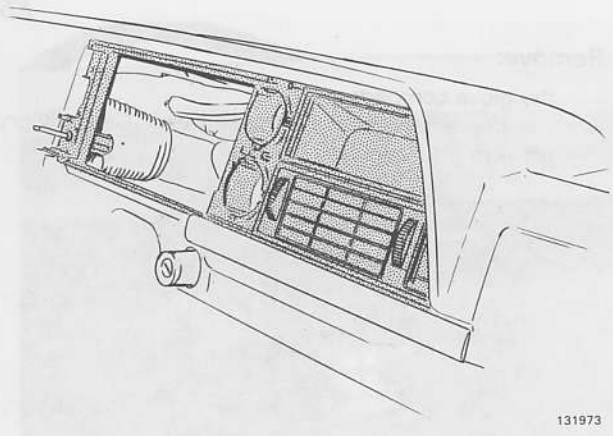

K10

Remove:

- the storage compartment
- the centre air vents
- the instrument panel frame.

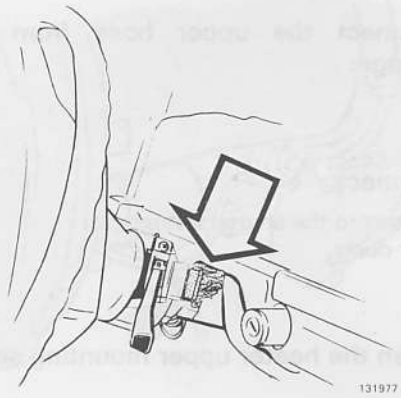

Left-hand side

K11

Unplug the windscreen/windshield wiper connectors

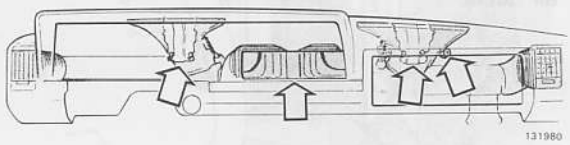

K12

Disconnect:

- the air duct between the heater and centre air vents
- the lead to the glove compartment light
- the rubber straps for the defroster vents.

K13

Remove the dashboard

Applies to 1981– models only.

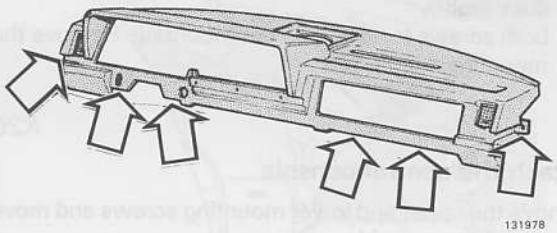

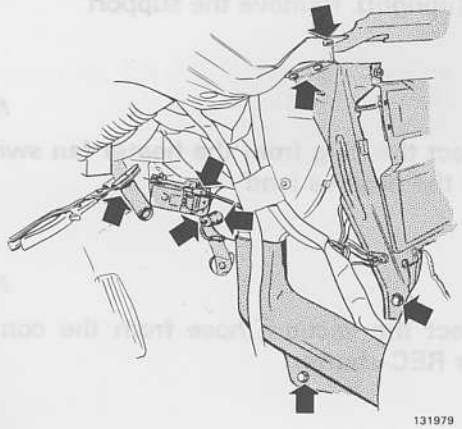

K14

Remove or disconnect:

- attachment screws for rear floor air duct. Lower the duct slightly
- lower heater mounting
- hose to vacuum tank
- cable to control valve
- upper and lower screws for central console
- screws on the centre support
- fan motor ground lead
- inlet hose to control valve. Use hose pliers to clamp the hose.

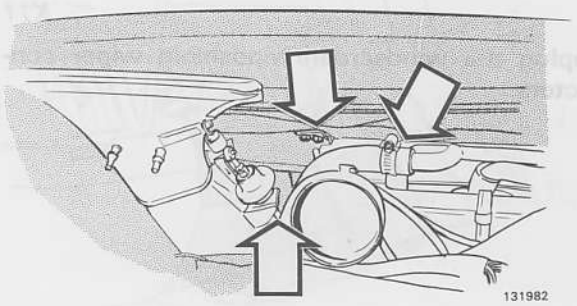

K15

Disconnect the upper hose from the heat exchanger

K16

Disconnect:

- hoses to the shutter actuators
- air ducts.

K17

Slacken the heater upper mounting screws

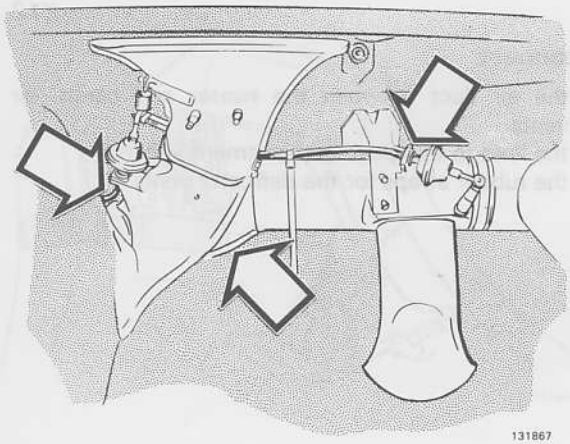

Right-hand side

K18

Disconnect:

- hoses to shutter actuators
- air ducts.

K19

Remove or disconnect

- the hose from the vacuum tank
- the screws securing the rear floor duct. Lower the duct slightly
- both screws for heater lower mounting. Remove the mounting.

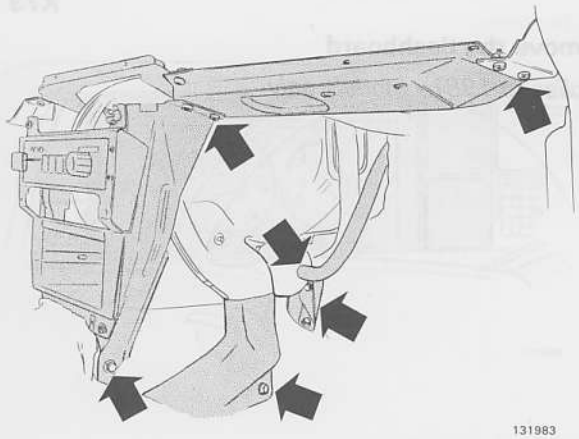

K20

Detach the central console

Remove the upper and lower mounting screws and move the console to one side.

K21

Remove the mounting screws for the right-hand support (upright). Remove the support

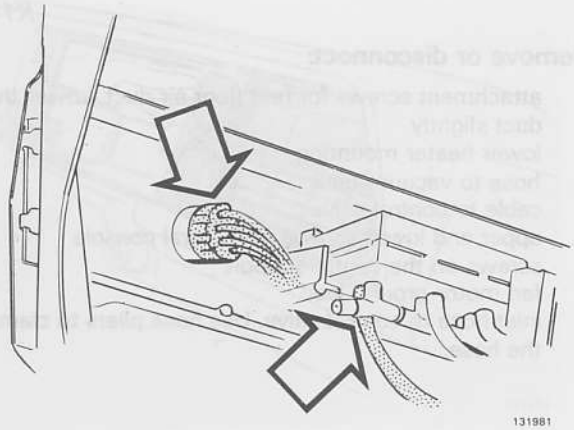

K22

Disconnect the plug from the heater fan switch and also the positive lead

K23

Disconnect the vacuum hose from the control panel for REC-shutter

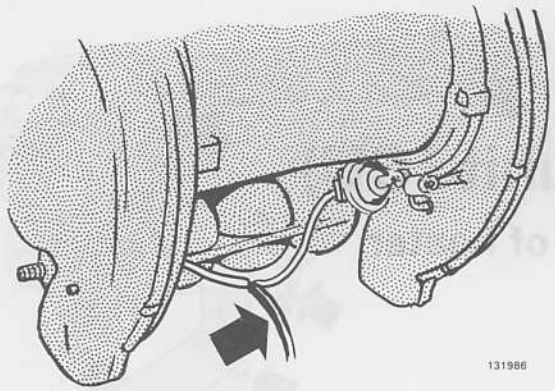

K24

Disconnect the input vacuum hose from the T-connection to the floor shutter actuators.

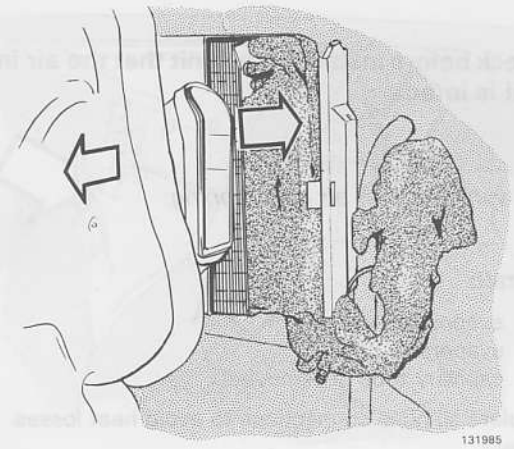

For vehicles with AC continue as follows:

K25

Remove the evaporator cover clips
Move the cover to one side and free the evaporator slightly

Note: Take care not to damage the heat sensor (capillary tube) when freeing the evaporator. It may be necessary to disconnect it from the evaporator.

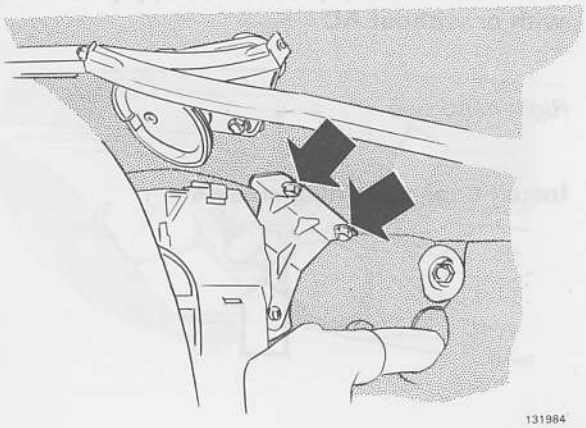

K26

Remove the upper mounting screws and lift out heater + evaporator as one unit

Combined unit (CU)

L. Installation of heater

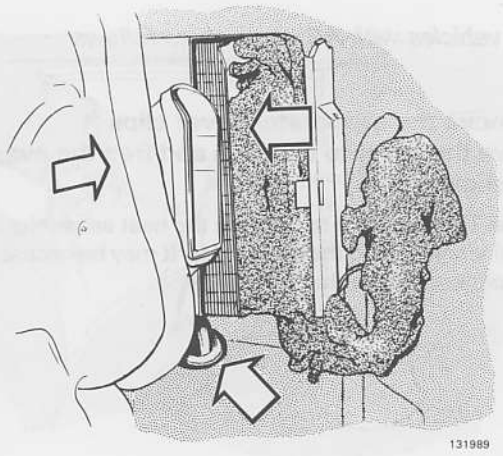

131989

L1

Check before installing the unit that the air intake seal is intact

For vehicles with air conditioning:

L2

Install:

- evaporator + heater
- evaporator cover
- capillary tube (if removed)

Insulate all hose connections to avoid heat losses.

From L3 all work procedures apply to vehicles with or without AC

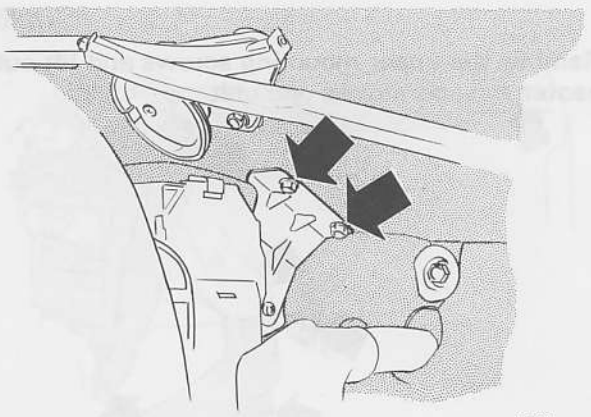

131984

Right-hand side

L3

Install upper retaining screws

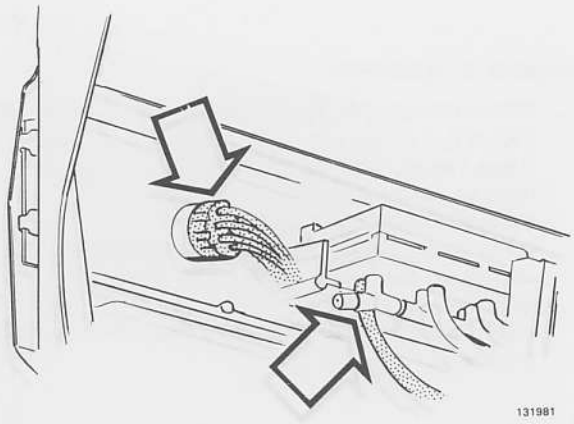

131981

L4

Connect:

- vacuum hose to control panel for REC shutter and fit the cover above the hoses
- the plugs for the fan motor switch
- the fan motor positive lead.

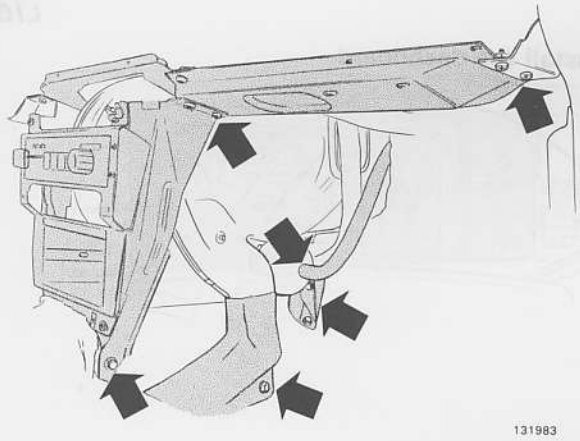

L5

Install:

- hose to vacuum tank
- heater lower mounting
- air duct to rear floor
- upper support (upright)
- central console.

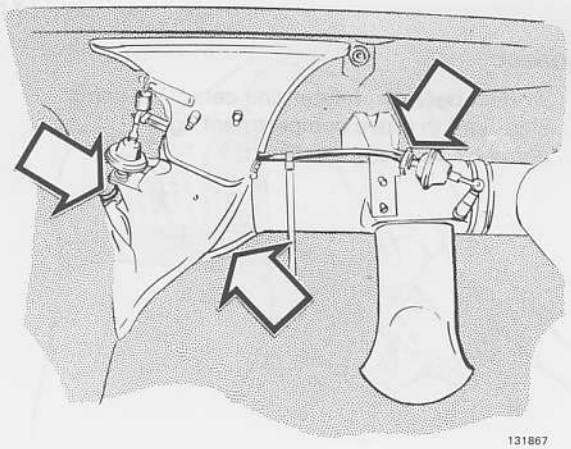

L6

Connect:

- air ducts
- hoses to shutter actuators.

Left-hand side

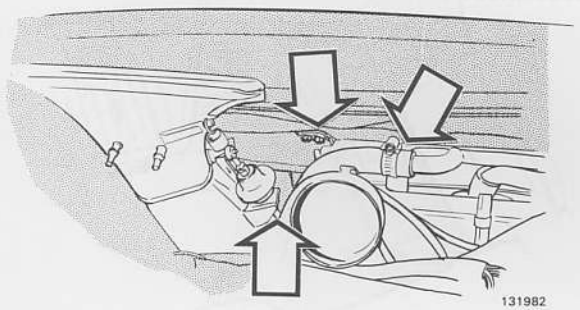

L7

Tighten the heater upper mounting screws

L8

Connect:

- upper water hose to the heat exchanger
- air ducts
- hoses to the shutter actuators.

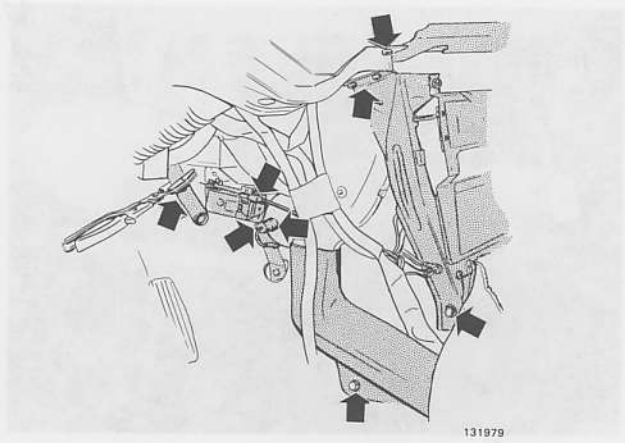

L9

Install or connect:

- lower heater mounting
- hose to the control valve. Remove the pliers
- cable to the control valve. Adjust the cable
- hose to the vacuum tank
- air duct to the rear seat
- upper and lower screws to the central console
- screws to the centre support (upright)
- fan motor ground lead.

L10

Install the dashboard

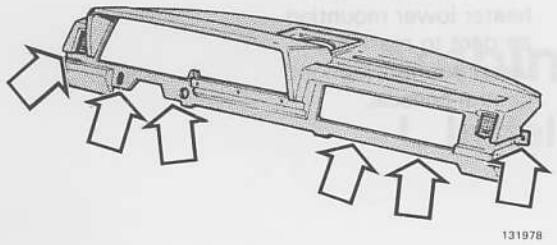

131978

L11

Connect:

- air duct between heater and centre air vents
- elec. lead to glove compartment light
- defroster vent grommets.

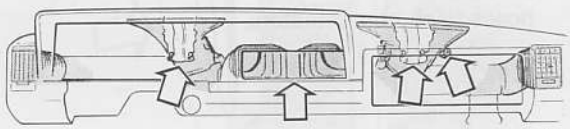

131980

L12

Reconnect windscreen/windschield wiper plugs



131977

L13

Install:

- instrument panel frame
- centre air vents
- storage compartment.

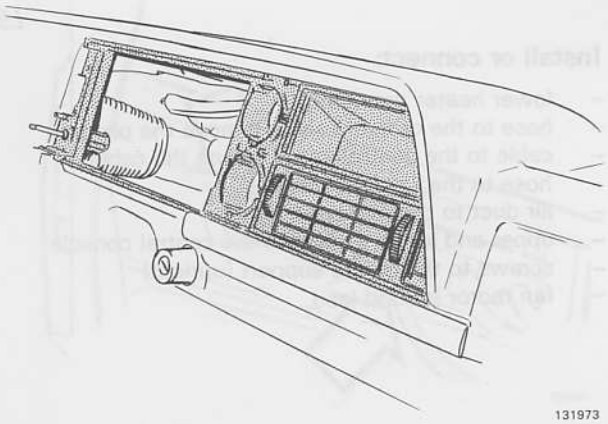

131973

L14

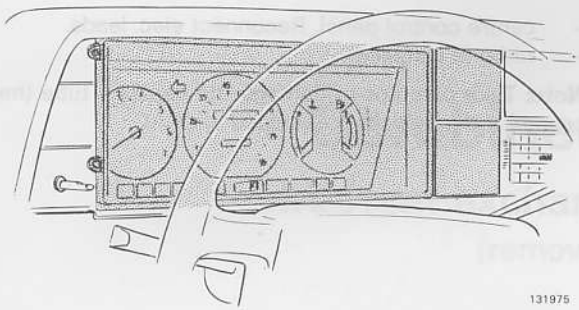

Install:

- combined instrument panel and reconnect the speedometer drive cable and elec. leads
- cover panel for extra instruments.

L15

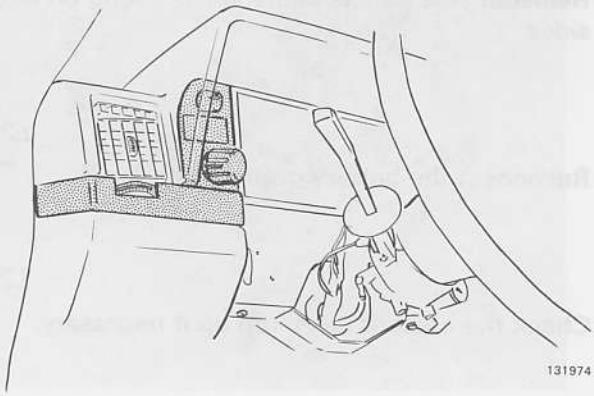

Install:

- light switch knob
- control knob for instrument lighting intensity
- strip below outer left-hand air vent.

L16

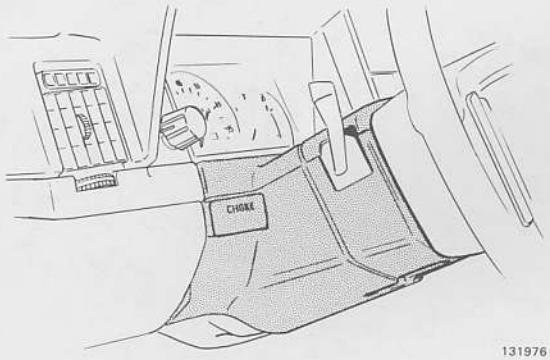

Install:

- steering column casings
- choke control if installed

Note: For CI (fuel injection) engines refit the cover plate for choke.

L17

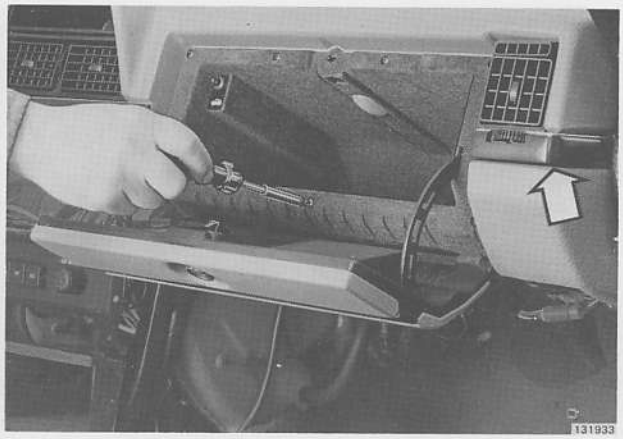

Install:

- strip below the outer right-hand vent
- glove compartment.

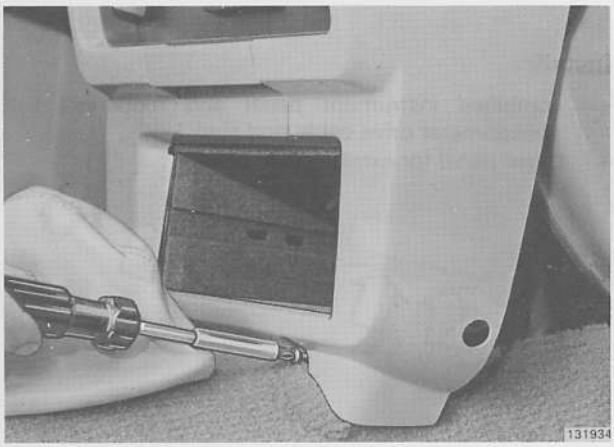

L18

Install:

- centre control panel. Reconnect elec. leads.
- radio (if installed).

Note: Take care not to damage the capillary tube (heat sensor) if the vehicle is equipped with AC.

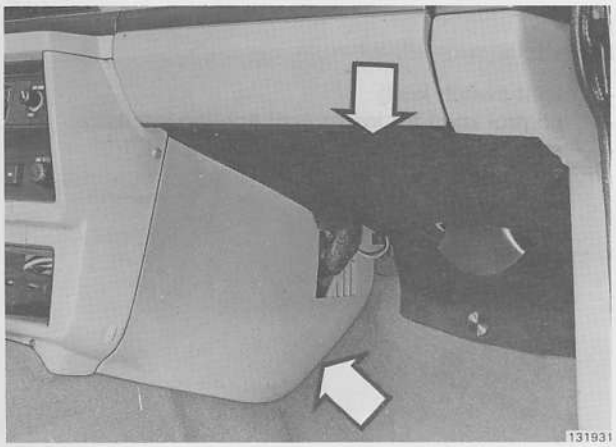

L19

Reinstall side panels and soundproofing on both sides

L20

Reconnect the battery ground lead

L21

Check the coolant level, top up if necessary.

Combined unit (CU)

M. Heat exchanger, replacement

(removed heater)

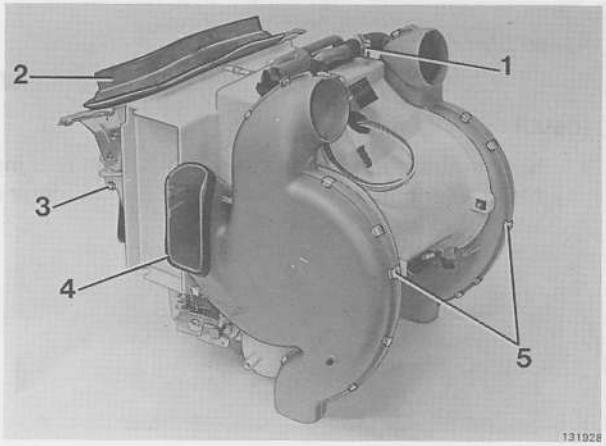

Disassembly of heater housing

M1

Remove or disconnect:

- upper hose to the heat exchanger (1)
- the air inlet rubber seal (2)
- the REC-shutter clips, left-hand-side (3)
- the rubber seals for both defroster vents (4)
- all clips for both the outer fan casings (5). Remove the casings.

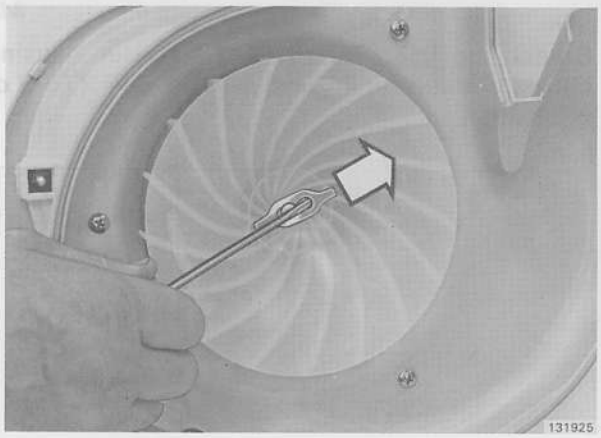

M2

Remove the fan wheel locking clips on both sides

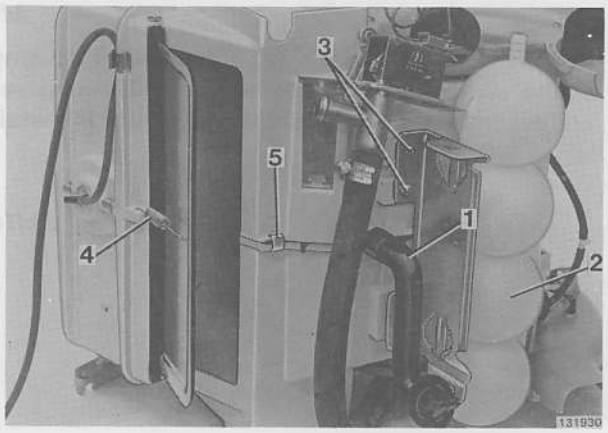

M3

Remove:

- the heater core drain hose (1)
- vacuum tank (2)
- retaining screws for vacuum tank bracket on left-hand-side (3)
- REC-shutter spring (4)
- all heater housing clips (5).

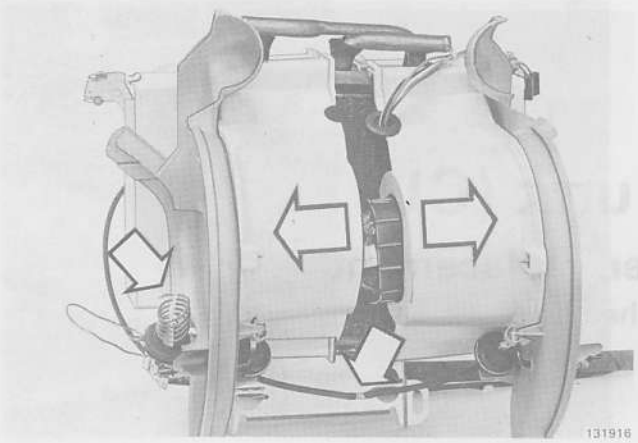

M4

Remove or disconnect:

- retaining screws for fan motor
- heater control valve capillary tube from attachment
- the shutter actuators rubber hose from the T-joint.

M5

Pull apart the heater housing

M6

Remove the heater core and fan motor

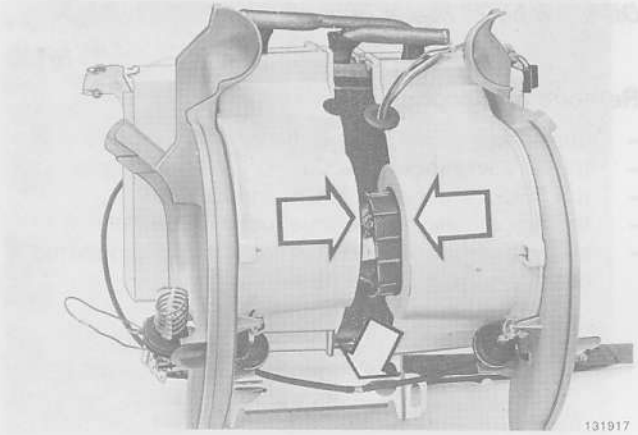

Assembly of heater housing

M7

Install:

- heat exchanger and fan motor to heater housing. Make sure that the plastic cover for the fan motor is positioned correctly
- the shutter actuator hose to the T-joint.



M8

Smear the lower edge of the heater housing halves with sealant. Volvo part no. 686 275-9 or equivalent.

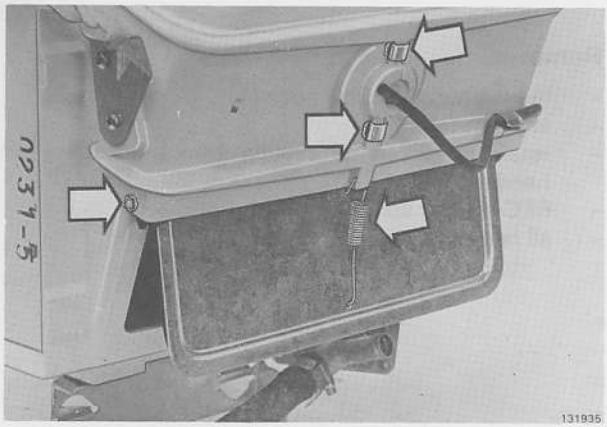

M9

Insert the REC-shutter shaft in the heater housing at the same time as both heater housing halves are assembled and the shutter actuator is installed.

M10

Install or connect:

- REC-shutter clip
- return spring
- all heater housing clips
- vacuum hose to REC-shutter actuator.

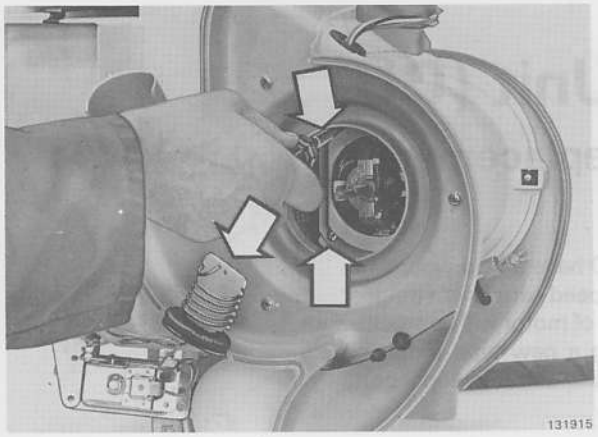

M11

Tighten the fan motor screws

M12

Attach the heater control valve capillary tube to the mounting

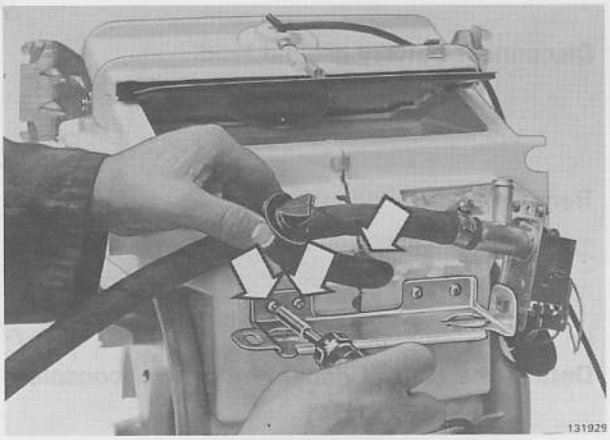

M13

Install:

- retaining screws for the vacuum tank bracket and vacuum tank
- heater core drain hose.

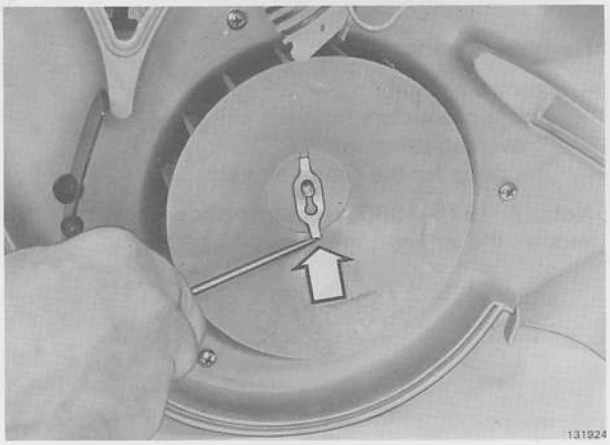

M14

Attach both fan wheels and secure with clips

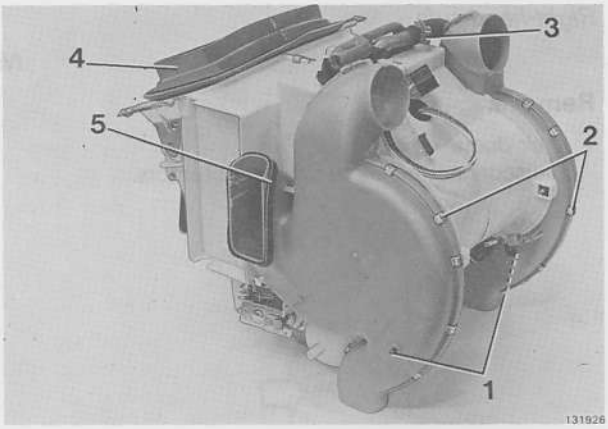

M15

Install the outer fan casings

Check that the shafts (1) are located correctly.

M16

Now install the following parts:

- all fan casing clips (2)
- upper water hose to heater core (3)
- air intake rubber seal (4)
- rubber seals for defroster hoses inlet, both sides (5).

Combined Unit (CU)

N. Fan motor, replacement

Vehicles built during 1975–1980 have a field wound fan motor. 1981-vehicles have a 4-speed permanent magnet motor. In the future only this type of motor will be stocked as a spare part. When installing a new type motor on 1975–1980 vehicles modifications and additional parts are required to obtain correct fit.

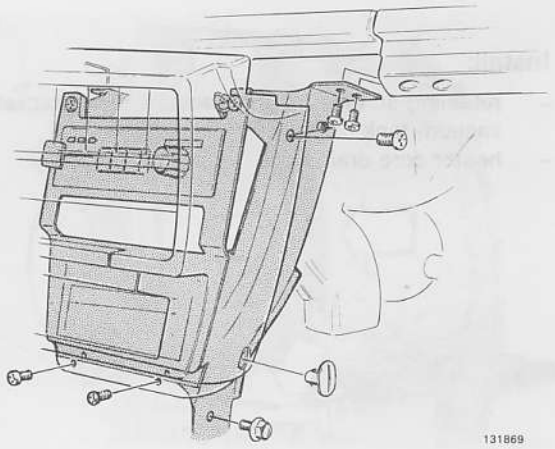

131869

N1

Disconnect battery ground lead.

N2

Remove:

- sound insulation and side panels on both sides
- radio (if installed).

N3

Detach the control panel and central console

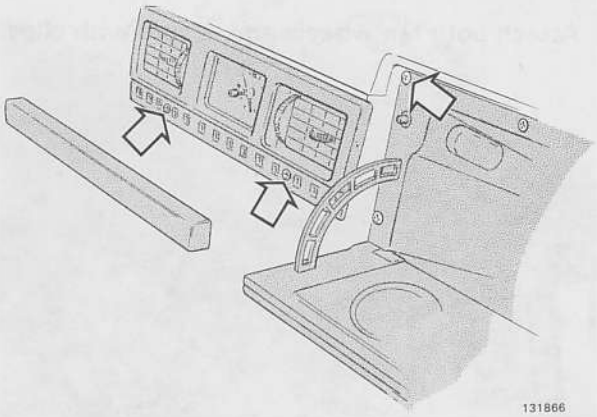

131866

N4

Remove or disconnect:

- centre air vents
- cable connectors from the clock
- glove compartment
- air ducts for the centre air vents.

Note: A 1975–1980 version is shown. On the 1981 version, the air vents are secured by a screw.

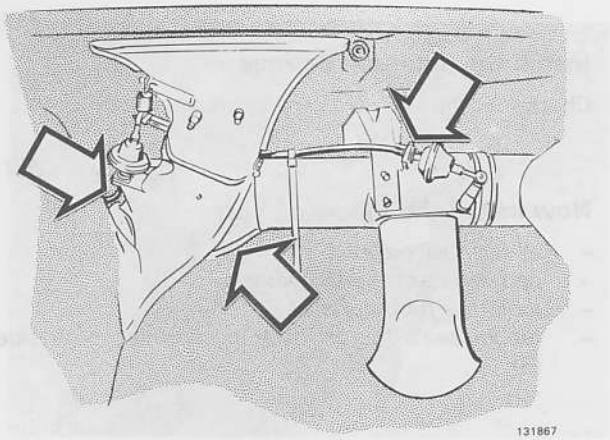

131867

Right-hand-side

N5

Remove:

- air ducts
- disconnect hoses to shutter actuators.

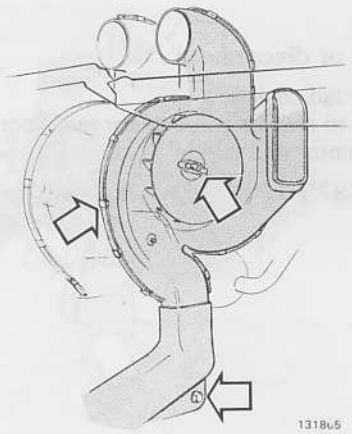

N6

Fold back the floor carpet

N7

Remove:

- screw for the rear floor air duct. Move the duct to one side slightly
- outer fan casing
- fan wheel.

Note: It may be necessary to remove the support under the glove compartment to remove the fan casing.

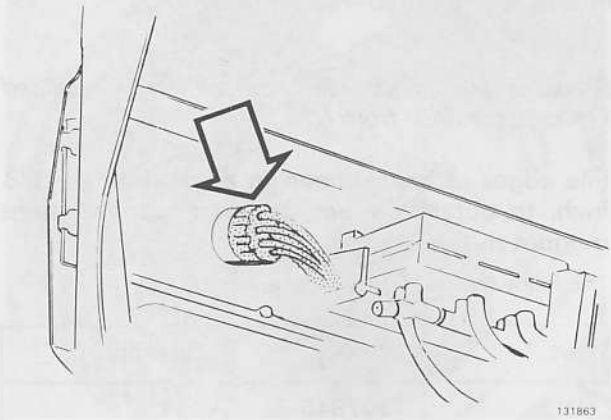

N8

Disconnect:

- fan motor switch from central console
- elec. leads from the switch.

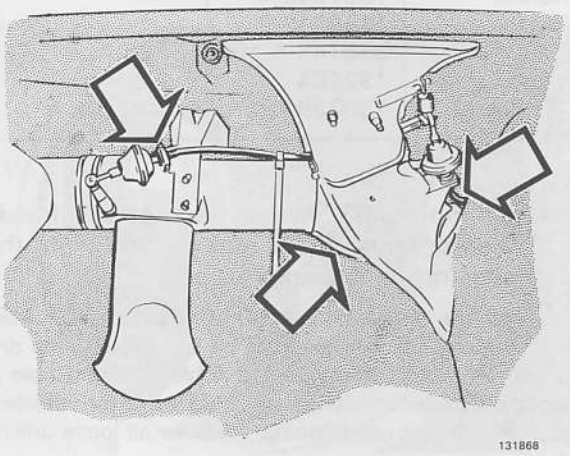

Left-hand side

N9

Disconnect:

- air ducts
- hoses to shutter actuators.

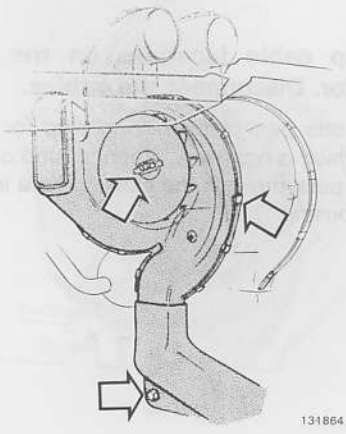

N10

Fold back the floor carpet

N11

Remove:

- screw for rear floor air duct. Move the duct to one side slightly
- outer fan casing
- fan wheel

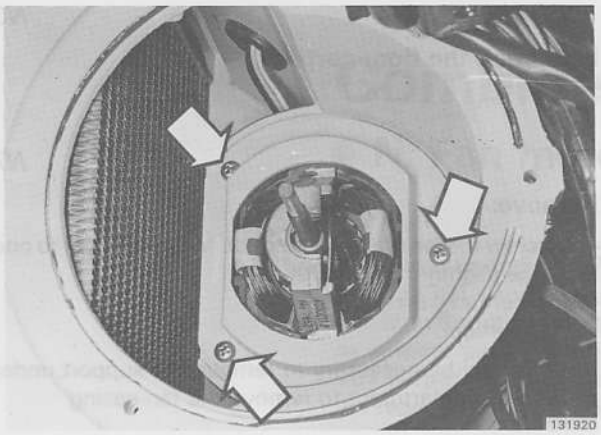

N12

Remove or disconnect:

- inner fan casing
- hose to shutter actuator for rear floor
- fan motor and ground lead.

Note: A 1975–1980 version is shown.

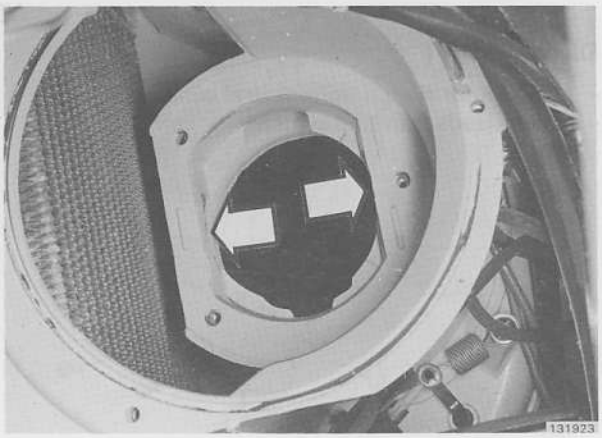

Modification of 1975–1980 models

N13

(Vehicles built since 1981 or previously modified vehicles, continue from N15.)

File edges of heater housing approximately 1/8 inch, to obtain correct fit for new permanent magnet motor

The following additional parts are necessary:

Part	Number	Quantity
Motor	1307845-6	1
Resistor	1307846-4	1
Switch	1259912-2	1
Screw	955145-8	3
Washer	192404-2	2
Plastic Bush	1307391-1	3

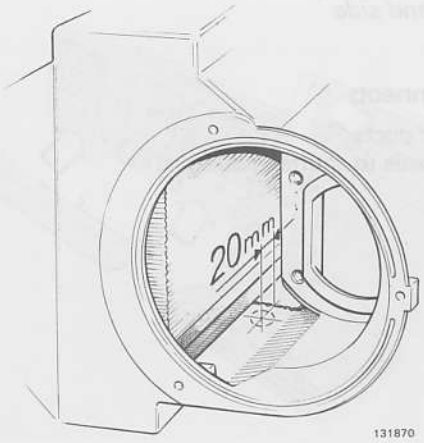

N14

Drill a 16 mm = 0.63" hole in the bottom left side of the heater housing, 20 mm = 0.79" from the outer edge of the housing.

Drill from the inside with a 90° drill adapter or from underneath by using a long drill bit and holding the drill against the transmission tunnel. A clean, round hole is needed otherwise condensation could leak if the vehicle is equipped with air conditioning. Remove all loose drilling debris.

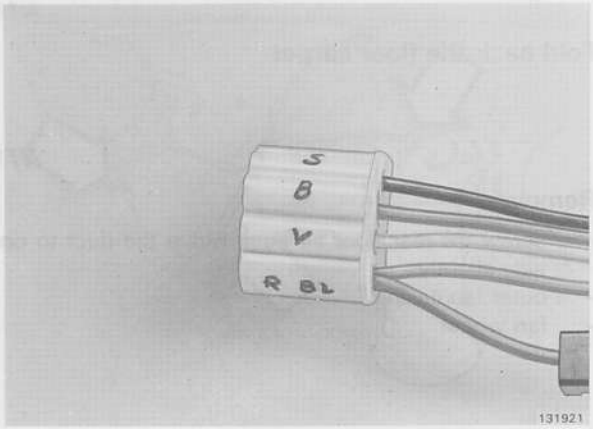

N15

Mark up cable locations on the new switch connector. Disconnect the cables.

There is one part of the wiring plug for the heater fan switch which is not used. When ground off, the complete plug will pass through the existing hole in the top of the heater housing.

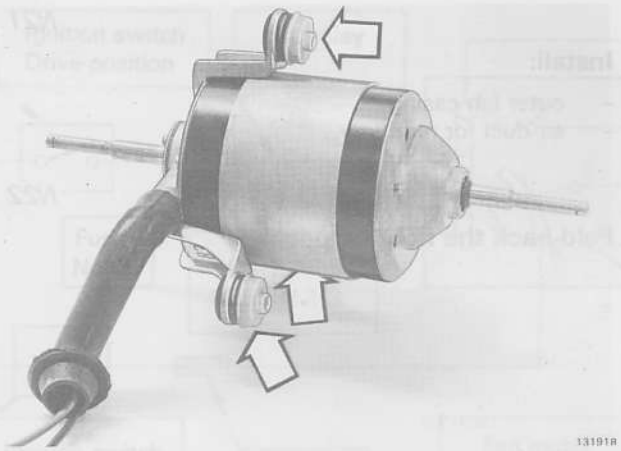

N16

Install plastic bushings as illustrated. If not installed the fan wheels many contact the casings.

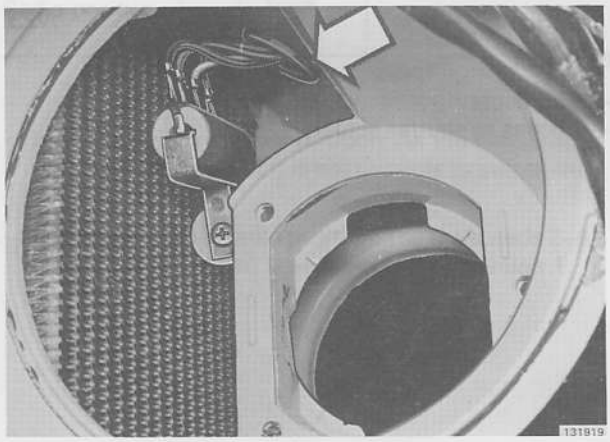

N17

Pass the cables for the resistor through the upper hole in the heater housing. Fit the rubber grommet

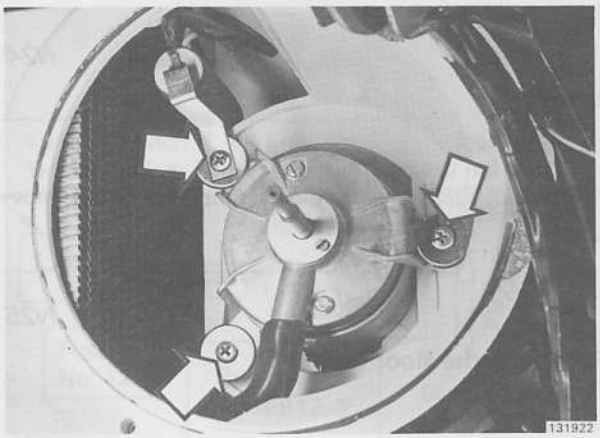

N18

Install the motor

Use the screws and washers in the installation kit.

Insert the cables and casing through the drilled hole in the bottom of the heater housing.

Note: Take care not to crease or restrict the cable casing, since air for fan motor ventilation flows along it.

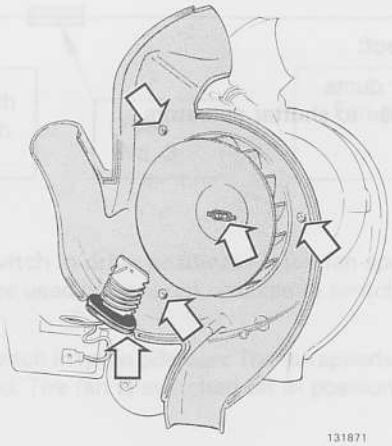

N19

Install:

- inner fan casing
- control valve capillary tube in inner fan casing
- fan wheel.

N20

Connect hose to rear floor shutter actuator

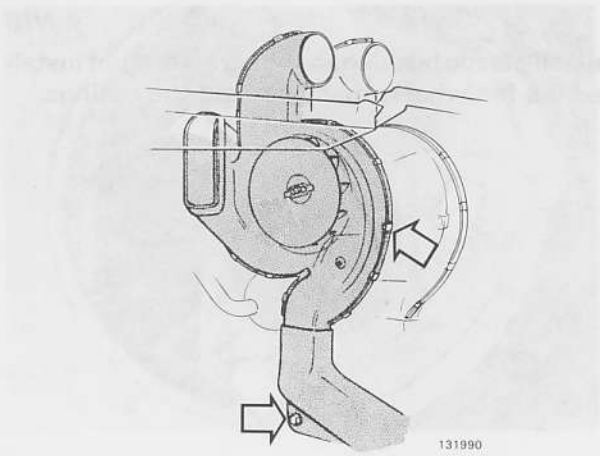

N21

Install:

- outer fan casing
- air duct for rear floor.

N22

Fold back the floor carpet

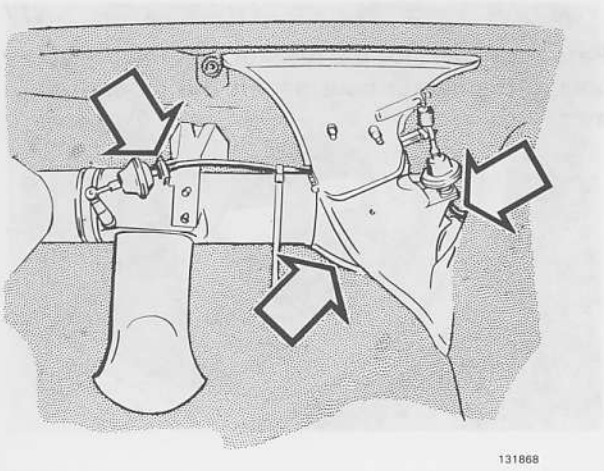

N23

Connect:

- air ducts
- hoses to shutter actuators.

Right-hand side

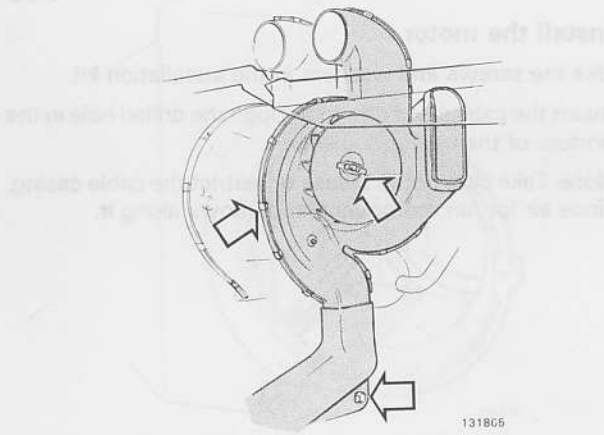

N24

Install:

- fan wheel
- outer fan casing
- the support under the glove compartment (if removed)
- air duct for rear floor.

N25

Fold back the floor carpet

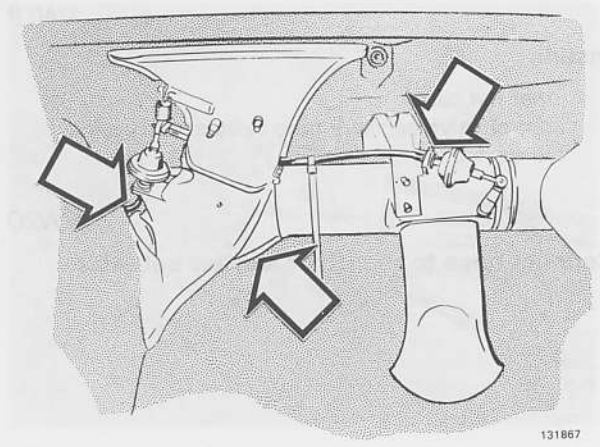

N26

Connect:

- air ducts
- hose to shutter actuators.

N27

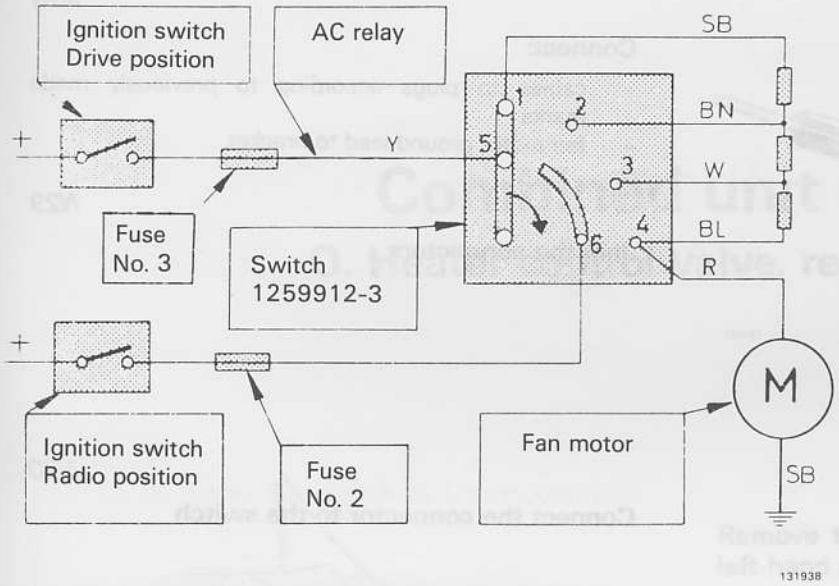

1. **Ignition switch in drive position:** All the fan speeds (1–4) can be used but it is not possible to switch the fan off.
2. **Ignition switch in radio position:** The fan speeds 2–4 can be used. The fan is switched off in position 1.

Connecting the fan motor

Vehicles built up to and including 1978:

Move the existing yellow cable from fuse 2 to fuse 3 and connect it to terminal 5 on the switch connector.

Use a new cable and connect it from fuse 2 to terminal 6 on the connector. Connect the AC relay on the cable between fuse 3 and terminal 5 on the switch connector. Use a Scotch-lock type of plug.

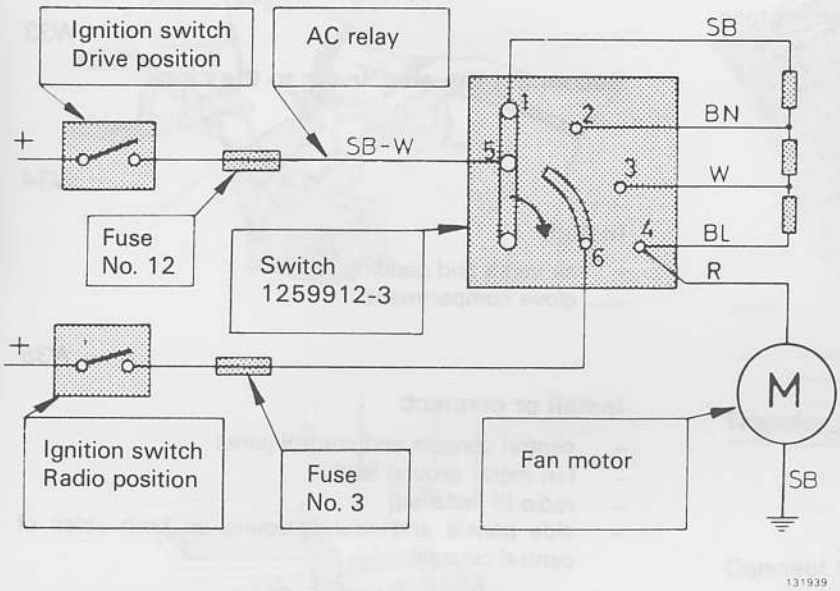

1. **Ignition switch in drive position:** All the fan speeds (1–4) can be used but it is not possible to switch the fan off.
2. **Ignition switch in radio position:** The fan speeds 2–4 can be used. The fan is switched off in position 1.

Vehicles built 1979–1980

Move the existing black/white cable from fuse 3 to fuse 12 and connect it to terminal 5 on the switch connector.

Note: It may be necessary to extend this cable. Use a new cable and connect it from fuse 3 to terminal 6 on the connector.

Connect the AC relay on the cable between fuse 12 and terminal 5 on the switch connector. Use a Scotch-lock type of plug.

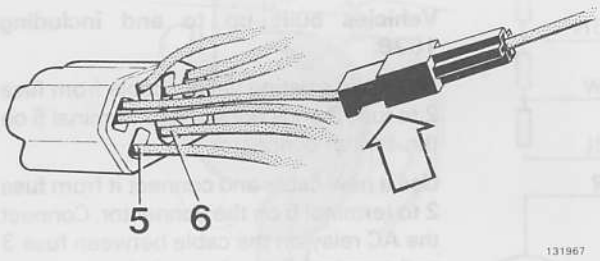

N28

Connect:

- cables to plugs according to previously made marks
- fan motor ground lead to bracket.

N29

Join the connectors

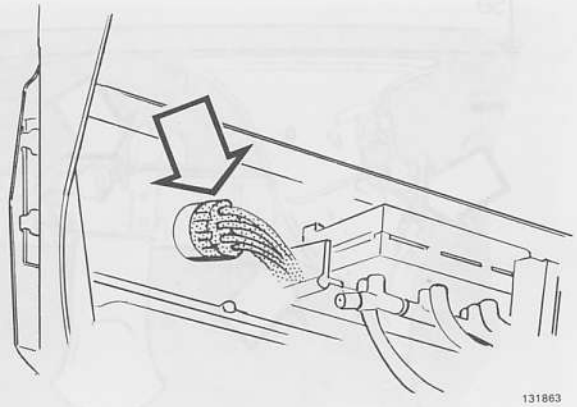

N30

Connect the connector to the switch

N31

Fit:

- the switch to the central console
- the switch knob.

Now test the operation of the fan motor

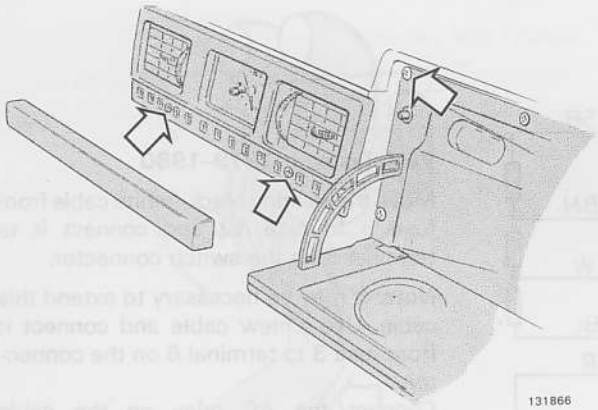

N32

Connect the air ducts for the centre air vents.

N33

Reconnect the elec. leads to the clock

N34

Install:

- air vents and padding
- glove compartment.

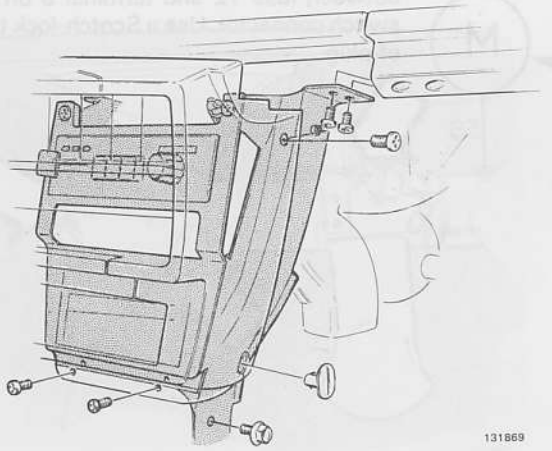

N35

Install or connect:

- central console and control panel
- fan motor ground lead
- radio (if installed)
- side panels and soundproofing on both sides of central console.

N36

Reconnect the battery ground lead.

Combined unit (CU)

O. Heater control valve, replacement

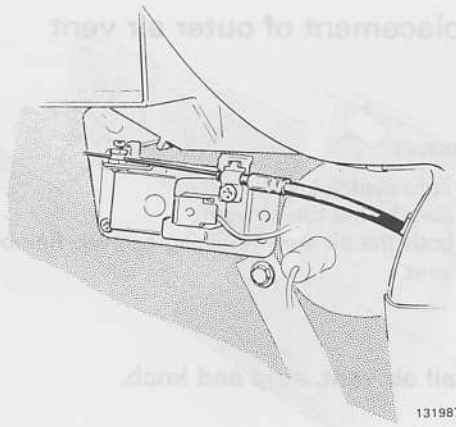

131987

01

Remove the soundproofing and side panels on left-hand side of central console

02

Disconnect the control cable from the control valve.

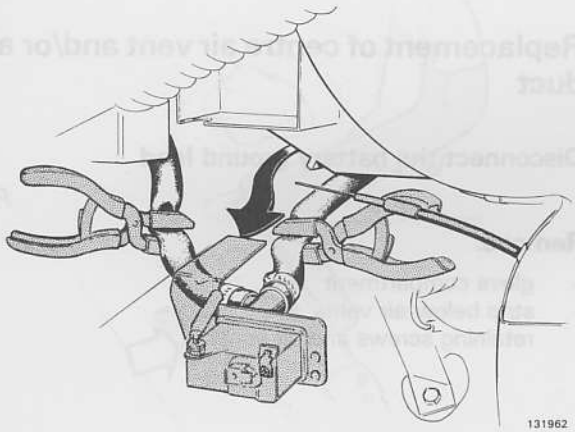

131962

03

Pull out the control valve from the mounting

Attach hose pliers to the inlet and outlet hoses. Disconnect the hoses.

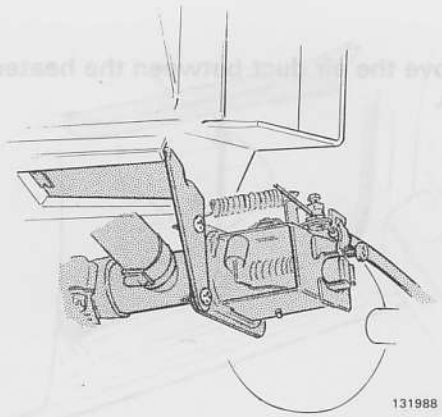

131988

04

Transfer the bracket to the new control valve

05

Connect the hoses. Detach the hose pliers

06

Install or connect:

- the control valve
- the control cable. Adjust the cable
- soundproofing and side panels.

Air distribution

P. 1975–1980

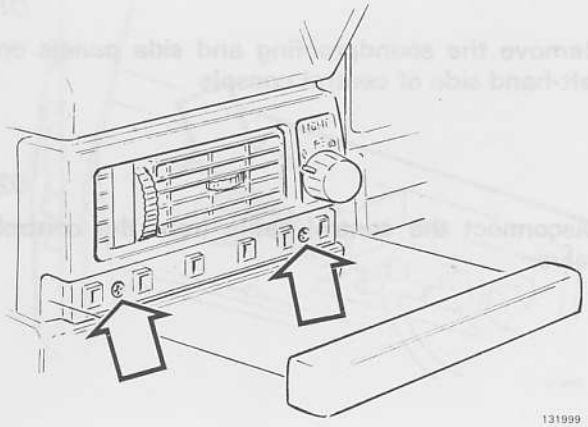

131999

Replacement of outer air vent

P1

Remove:

- light switch knob
- strip below the air vent
- both the air vent retaining screws. Remove the air vent.

P2

Install air vent, strip and knob.

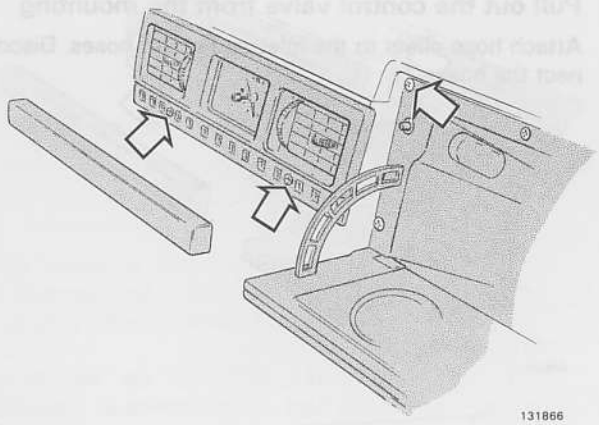

131866

Replacement of centre air vent and/or air duct

Disconnect the battery ground lead

P3

Remove:

- glove compartment
- strip below air vents
- retaining screws and air vents.

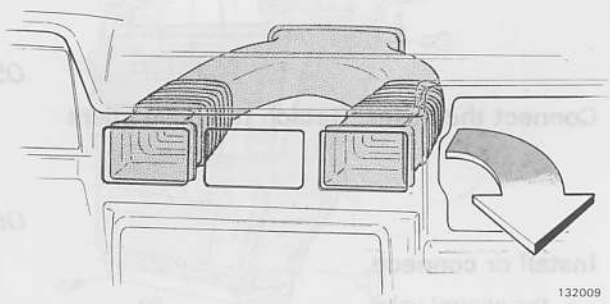

132009

P4

Remove the air duct between the heater and air vents.

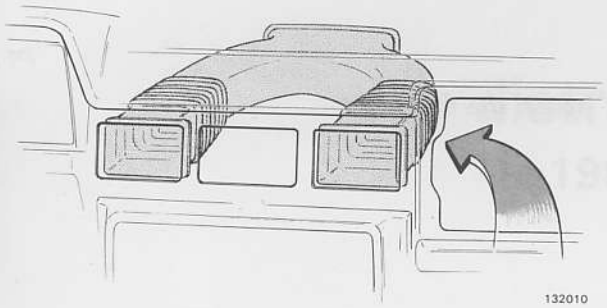

132010

P5

Install the air duct

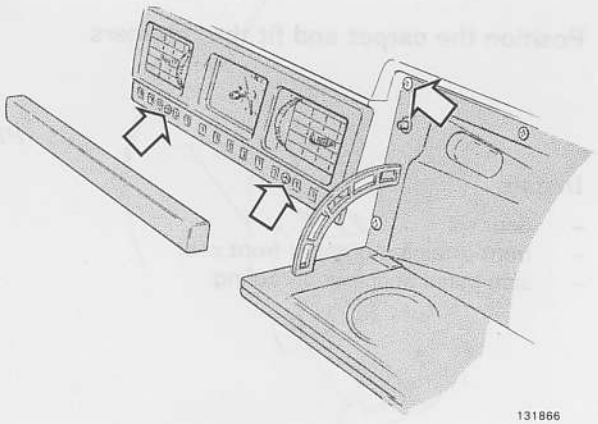

131866

P6

Install:

- air vents
- strip below air vents
- glove compartment

Reconnect the battery ground lead.

Rear floor air duct, replacement

Push seat as far forward as possible

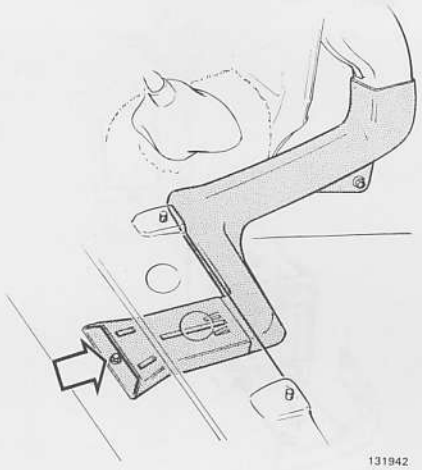

131942

P7

Unscrew the retaining screws on the rear duct and remove the duct

P8

Install the new duct

Move the front seat back to its rearmost position

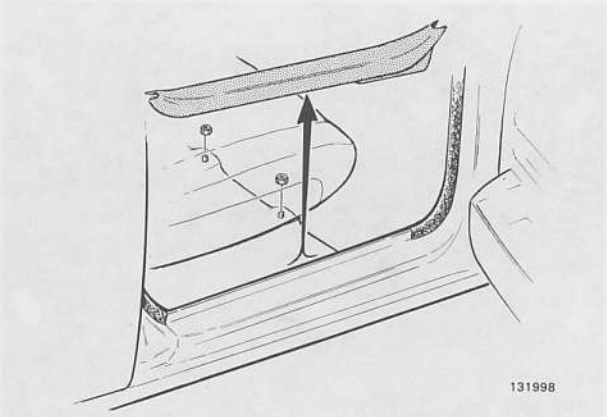

131998

P9

Remove:

- soundproofing and side panel
- front retaining nuts for front seat. Lift the seat backwards slightly
- door sill
- floor carpet retainers. Move carpet to one side.

Air duct to rear floor, replacement

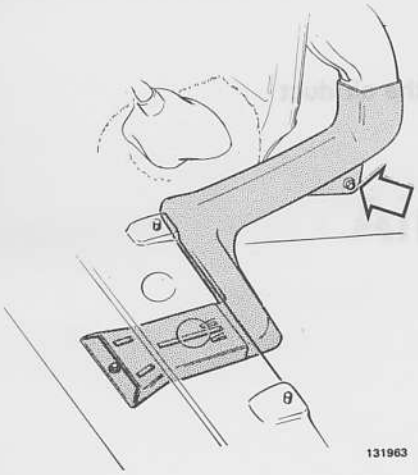

P10

Remove the front air duct

P11

Install the new duct

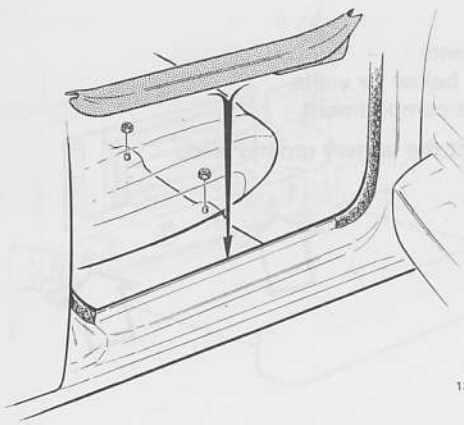

P12

Position the carpet and fit the retainers

P13

Install:

- door sill
- front retaining nuts for front seat
- side panel and soundproofing.

Air distribution

R. 1981–

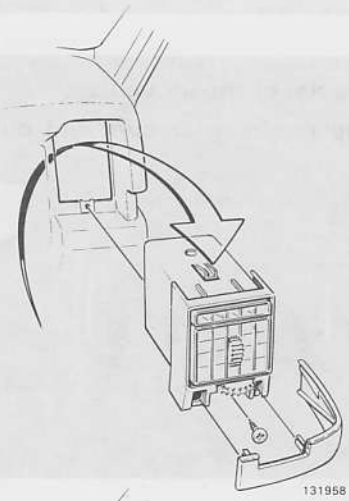

Outer air vent, replacement

R1

Remove the strip under the vent

Carefully pry off with a screwdriver.

Remove the retaining screw and push down the clip on top of the vent. Remove the vent

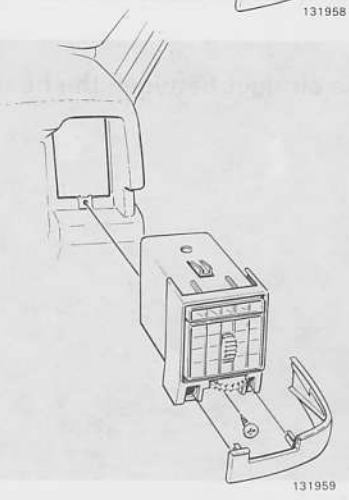

R2

Press in the new vent and tighten the screw

Refit the strip under the vent.

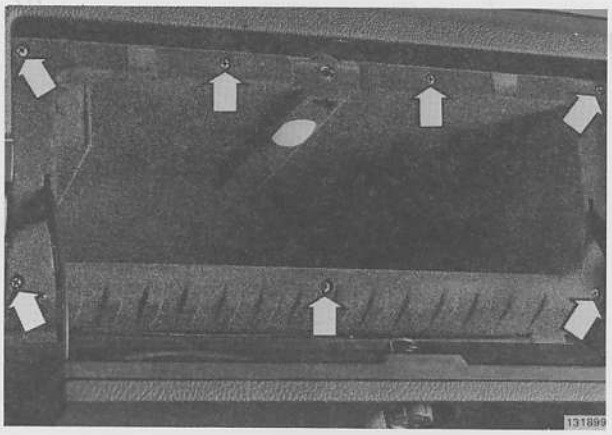

Centre air vent and/or duct, replacement

Disconnect the battery ground lead

R3

Remove the glove compartment

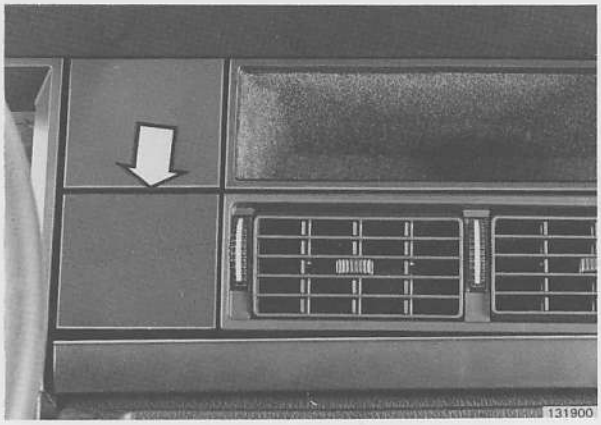

R4

Remove the extra instrument cover panel

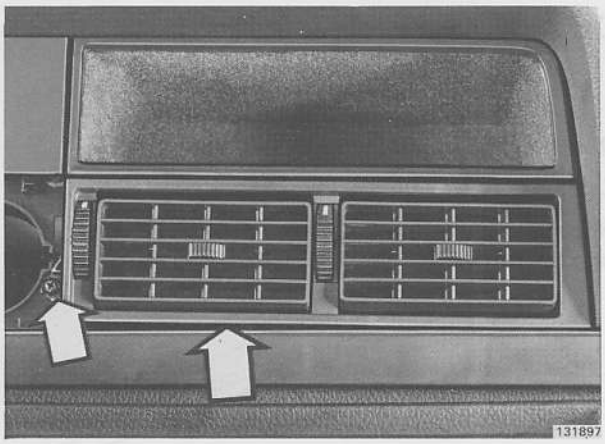

R5

Remove the rim of the air vents

Remove the retaining screws and pull out the vents

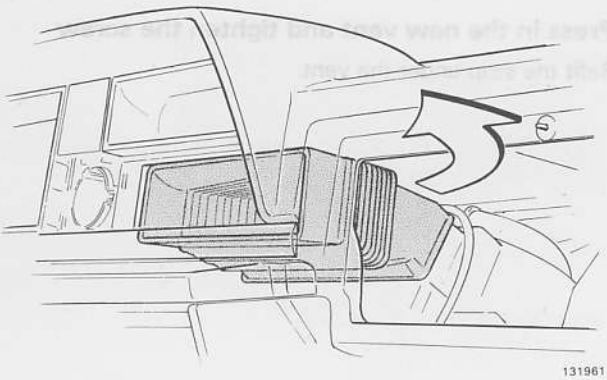

R6

Remove the air duct between the heater and air vents

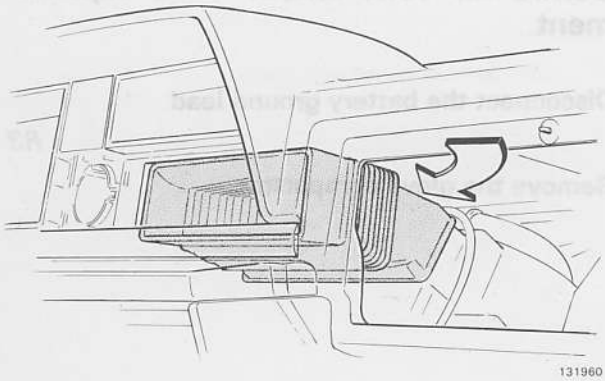

R7

Install the air duct

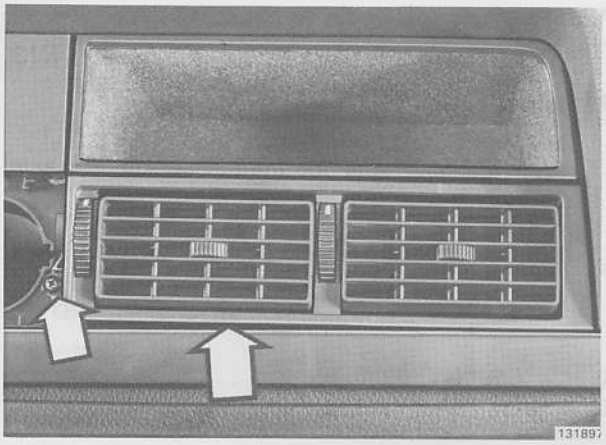

R8

Install the air vents and rim

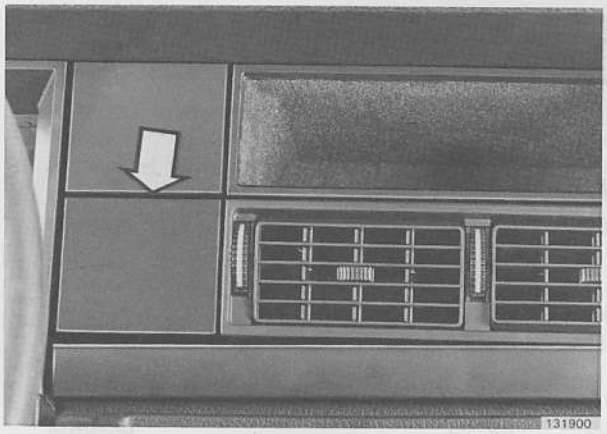

R9

Install extra instrument cover

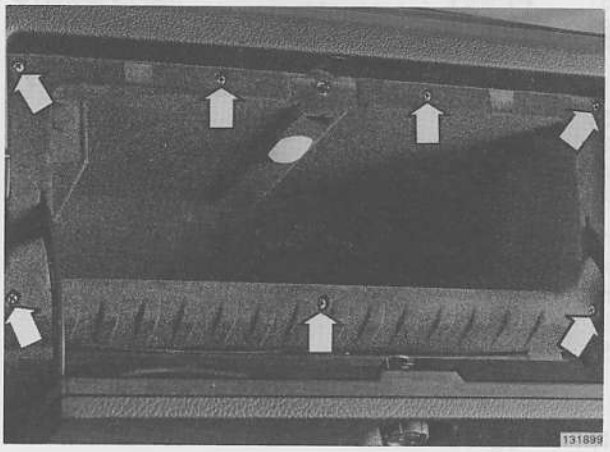

R10

Reinstall the glove compartment

Reconnect the battery ground lead

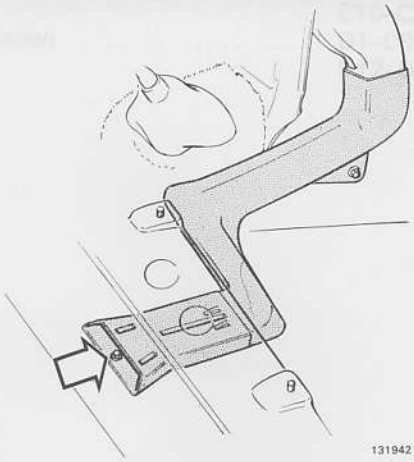

Rear floor air duct, replacement

Push the front seat as far forward as possible

R11

Remove the retaining screws at the rear of the duct and remove the duct

R12

Install the new duct

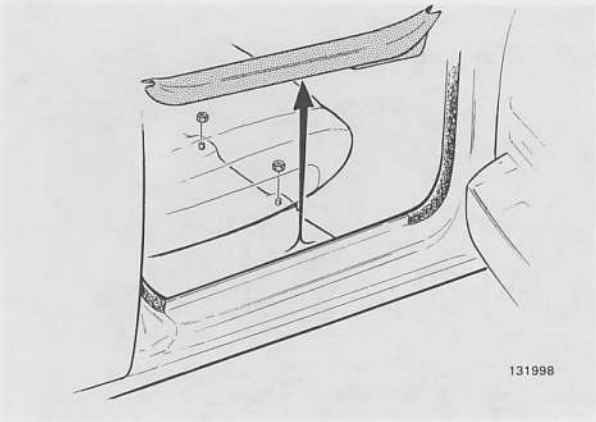

Push the front seat as far to the rear as possible

R13

Remove:

- soundproofing and side panel
- front retaining nuts for front seat. Lift the seat backwards slightly.
- door sill
- floor carpet retainers. Fold back the carpet.

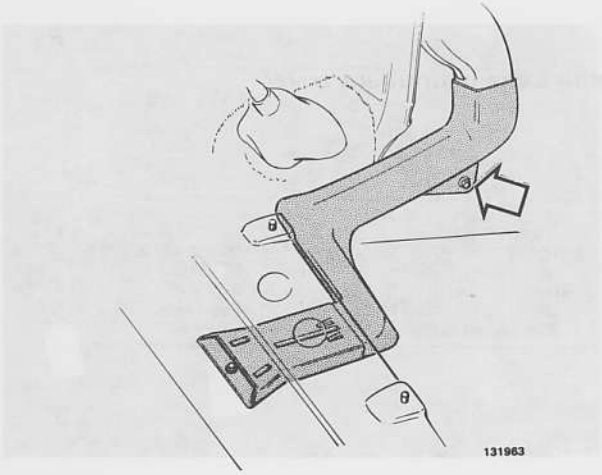

R14

Remove the front air duct

Remove the screw.

R15

Install the new duct

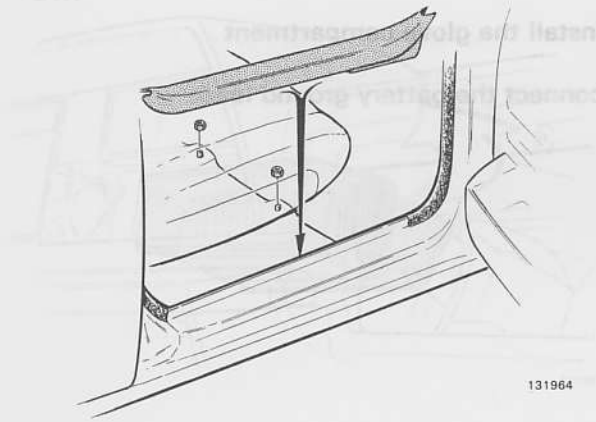

R16

Position the carpet and fit the retainers

R17

Install:

- door sill
- front retaining nuts for front seat
- side panel and soundproofing.

Index

	Operation	Page
Standard Unit		
Control/Cable		
removal	A1–A6	2
installation	A7–A10	3
Fan motor switch		
removal	B1	3
installation	B2	3
Fan motor (removed unit)		
removal	E1–E3	14
fan wheel, transferrance	E4	14
bracket installation	E5	14
installation	E6–E9	15
Heat exchanger, (removed unit)		
removal	E1–E2	14
installation	E6–E9	15
Heater control valve, type A		
removal	F1–F5	16
modification	F9–F14	18
installation	F18–F20	19
Heater control valve, type B		
removal	F1–F5	16
	F6–F8	17
installation	F15–F20	19
Heater, type A		
removal	C1–C9	4
	C13–C24	6
installation	D1–D11	9
	D14–D23	12
Heater, type B		
removal	C1–C5	4
	C10–C24	5
installation	D1–D9	9
	D12–D23	11

	Operation	Page
Combined Unit (CU)		
Control panel		
removal	H1–H4	22
installation	H5–H7	23
Fan motor		
removal	N1–N12	38
modification	N13–N14	40
installation	N18–N35	41
connection	N27	43
Fan motor switch		
removal	H1–H4	22
installation	H5–H7	23
Heater		
removal	K1–K26	25
installation	L1–L21	30
Heater control/Cable		
removal	G1–G3	21
installation	G4–G7	21
Heater control valve		
removal	O1–O3	45
installation	O4–O6	45
Heat exchanger, (removed unit)		
removal	M1–M6	35
installation	M7–M16	36
REC shutter actuator		
removal	I1	24
installation	I2	24
Shutter actuator for rear floor vent		
removal	I1–I4	23
installation	I5–I6	24

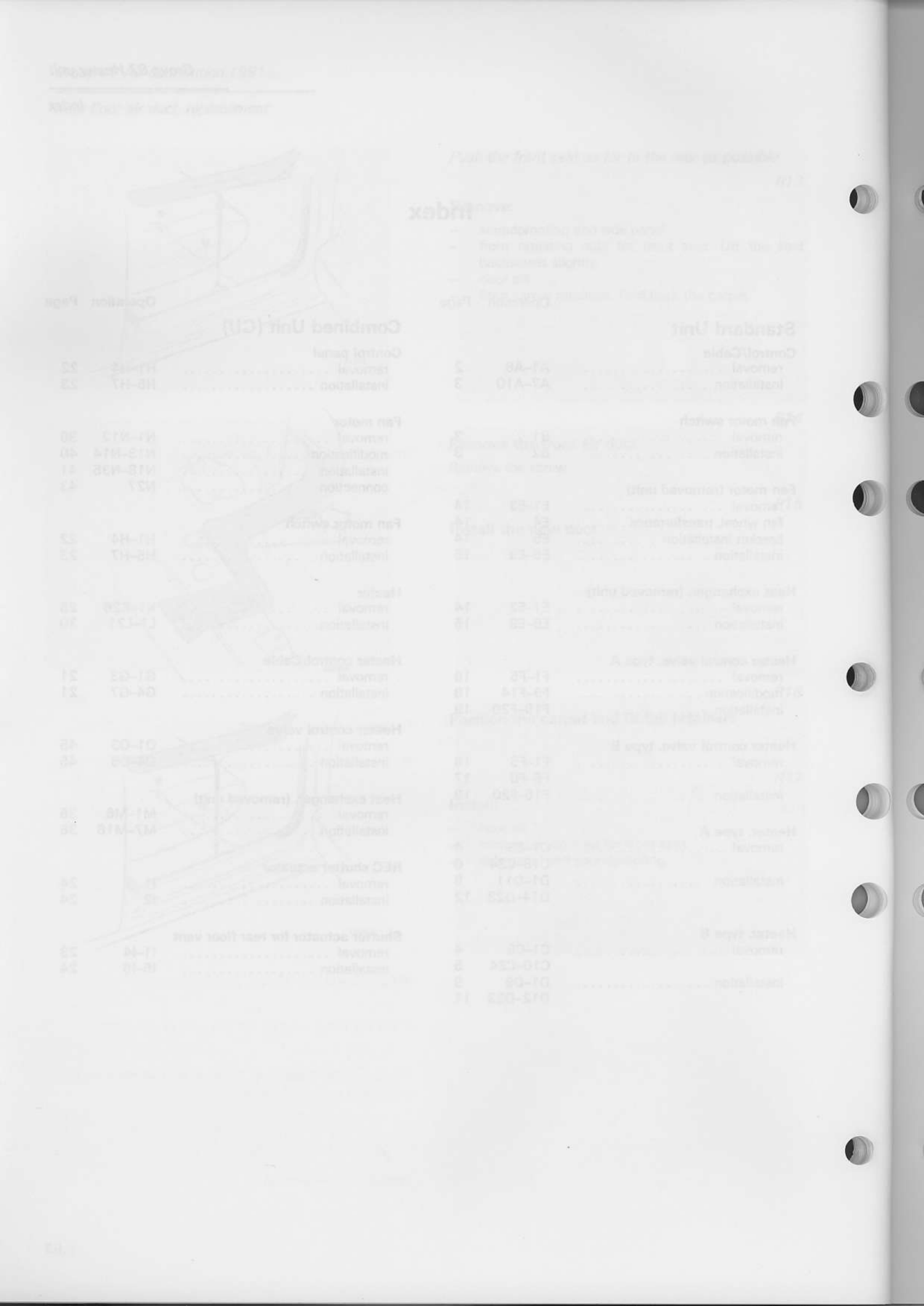

	Operation	Page
Air distribution 1975–1980		
Air vents		
outer, removal	P1	46
installation	P2	46
centre, removal	P3	46
installation	P6	47
Centre air vent/air duct		
removal	P4	46
installation	P5	47
Rear floor air duct		
rear, removal	P7	47
installation	P8	47
front, removal	P9–P10	47
installation	P11–P13	48
Air distribution 1981–		
Air vents		
outer, removal	R1	49
installation	R2	49
centre removal	R3–R5	49
installation	R8–R10	51
Centre air vent air duct		
removal	R6	50
installation	R7	50
Rear floor air duct		
rear, removal	R11	51
installation	R12	51
front, removal	R13–R14	52
installation	R15–R17	52

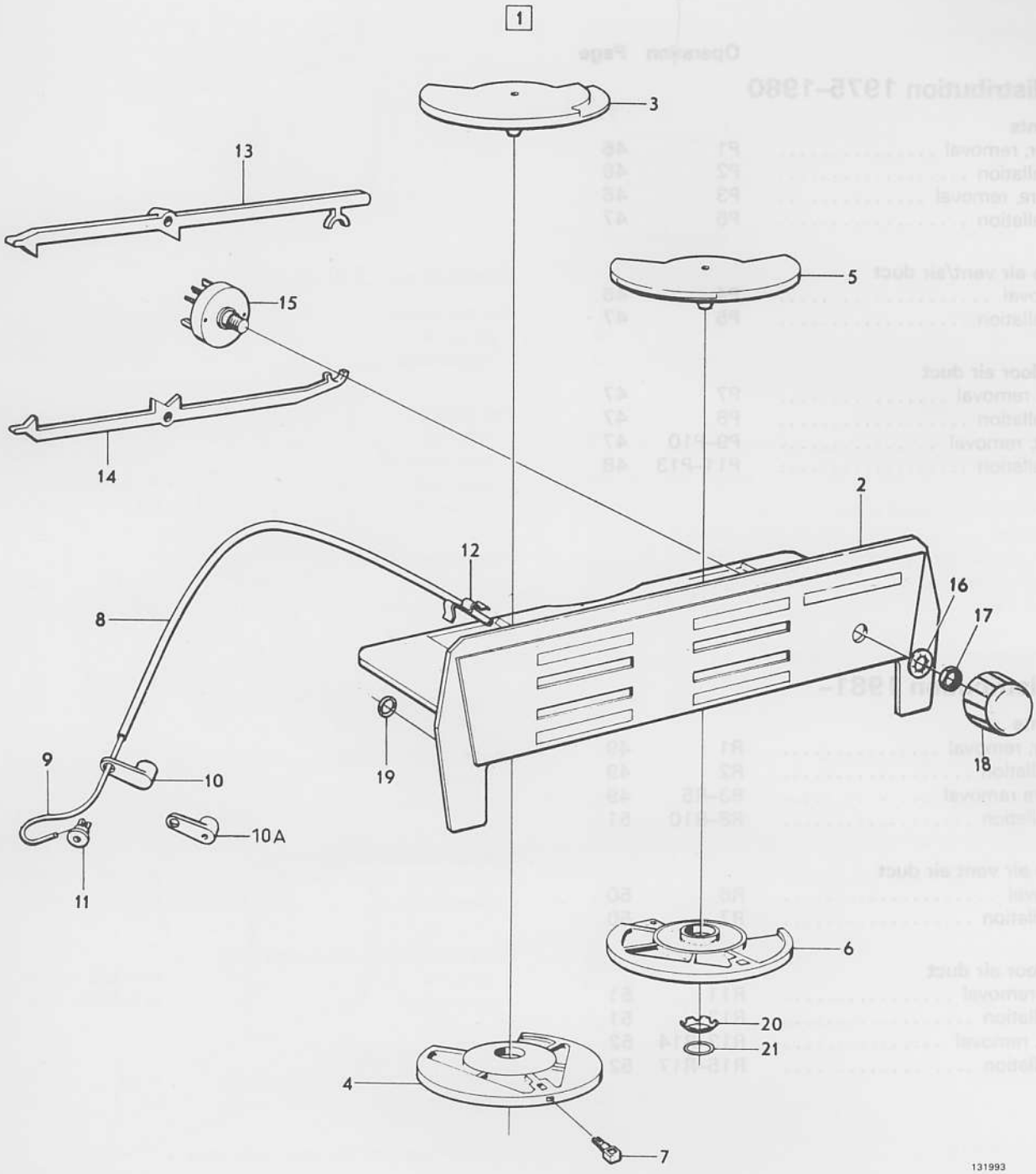

1. Heater control
2. Control panel
3. TEMP control disc
4. AIRMIX control disc
5. DEF control disc
6. FLOOR control disc
7. Knob
8. Sheath
9. Cable
10. Crank
11. Cable holder
12. Clip
13. Light distributor
14. Light distributor
15. Fan switch
16. Washer
17. Nut
18. Knob
19. Washer
20. Spring washer
21. Washer

Chart A. Heater controls, standard unit

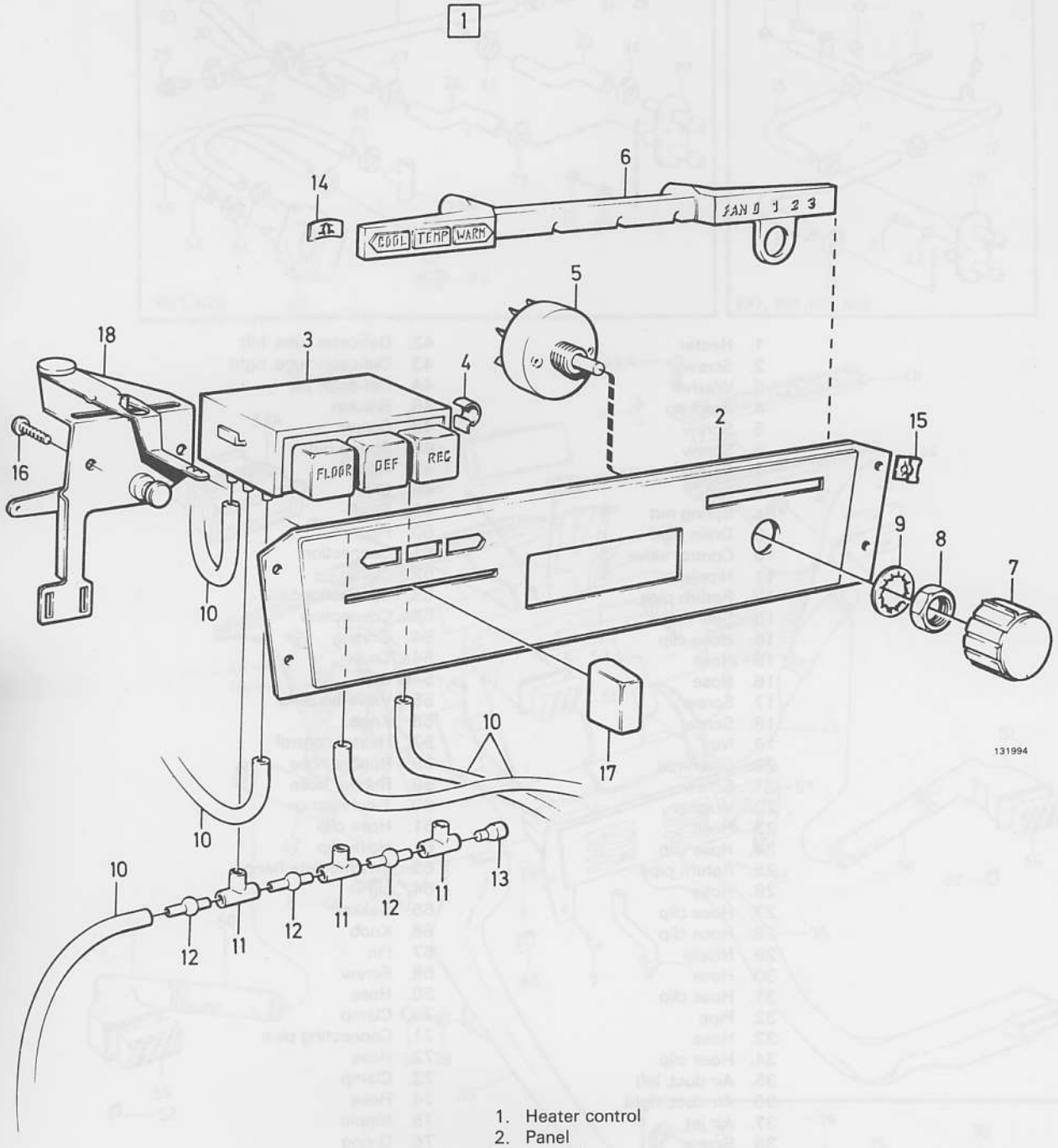

1. Heater control
2. Panel
3. Control
4. Clip
5. Switch
6. Light distributor
7. Knob
8. Nut
9. Washer
10. Hose
11. T-junction
12. Nipple
13. Plug
13. Clip
14. Clip
15. Spring nut
16. Screw
17. Knob
18. Control bracket

Chart B. Heater controls, CU

1. Heater
2. Screw
3. Washer
4. Bracket
5. Screw
6. Screw
7. Screw
8. Nut
8a. Spring nut
9. Drain pipe
10. Control valve
11. Nipple
12. Return pipe
13. Seal ring
14. Hose clip
15. Hose
16. Hose
17. Screw
18. Screw
19. Nut
20. Grommet
21. Screw
22. Washer
23. Hose
24. Hose clip
25. Return pipe
26. Hose
27. Hose clip
28. Hose clip
29. Nipple
30. Hose
31. Hose clip
32. Pipe
33. Hose
34. Hose clip
35. Air duct, left
36. Air duct, right
37. Air jet
38. Screw
39. Washer
40. Screw
41. Washer
42. Defroster tube, left
43. Defroster tube, right
44. Defroster jet
45. Bracket
46. Screw
47. Spring nut
48. Frame
49. Clip
49a. Stud
50. Pipe
51. Connection
52. Clamp
53. Connection
53a. Connection
54. Grating
54a. Cover
54b. Clip
55. Valve housing
56. Knob
57. Heater control
58. Rubber hose
59. Rubber hose
60. T-connection
61. Hose clip
62. Hose clip
63. Intermediate flange
64. Lid
65. Gasket
66. Knob
67. Pin
68. Screw
69. Hose
70. Clamp
71. Connecting pipe
72. Hose
73. Clamp
74. Hose
75. Nipple
76. O-ring
77. Screw
78. Spring nut

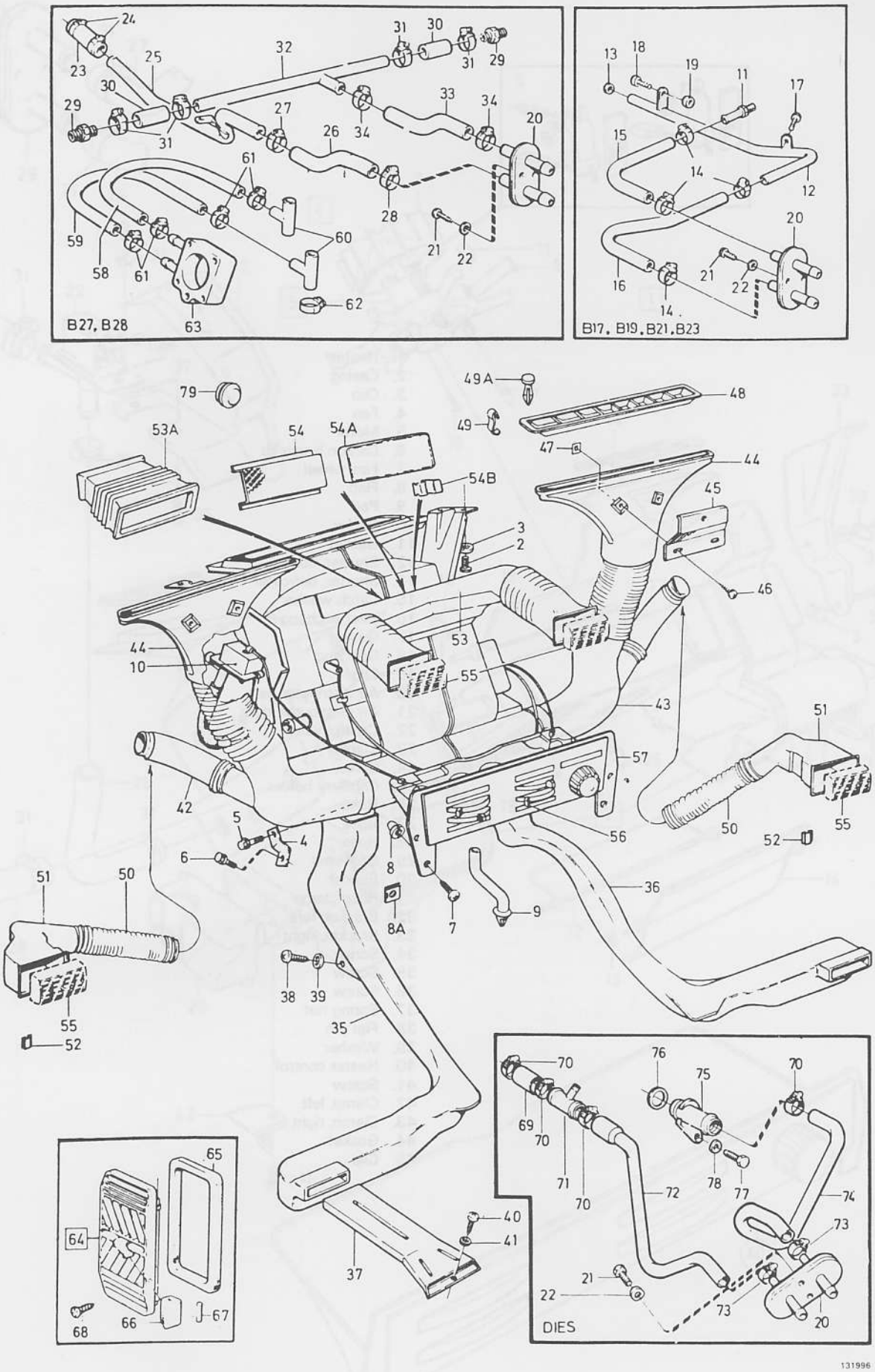

Chart C. Standard heater unit

1. Heater
2. Casing
3. Clip
4. Fan
5. Motor
6. Carbon brush kit
7. Fan wheel
8. Flap
9. Pad
10. Screw
11. Gasket
12. Shutter, floor
13. Shutter, defroster
15. Catch washer
16. Heat exchanger
17. Gasket
18. Seal ring
19. Clip
20. Air distributor, left
21. Air distributor, right
22. Control valve
23. Clamp
24. Screw
25. Capillary holder
26. Hose
27. Hose
28. Hose
29. Grommet
30. Spacer
31. Hose clamp
32. Bracket, left
33. Bracket, right
34. Screw
35. Screw
36. Screw
37. Spring nut
38. Flat pin
39. Washer
40. Heater control
41. Screw
42. Clamp, left
43. Clamp, right
44. Gasket
45. Clip

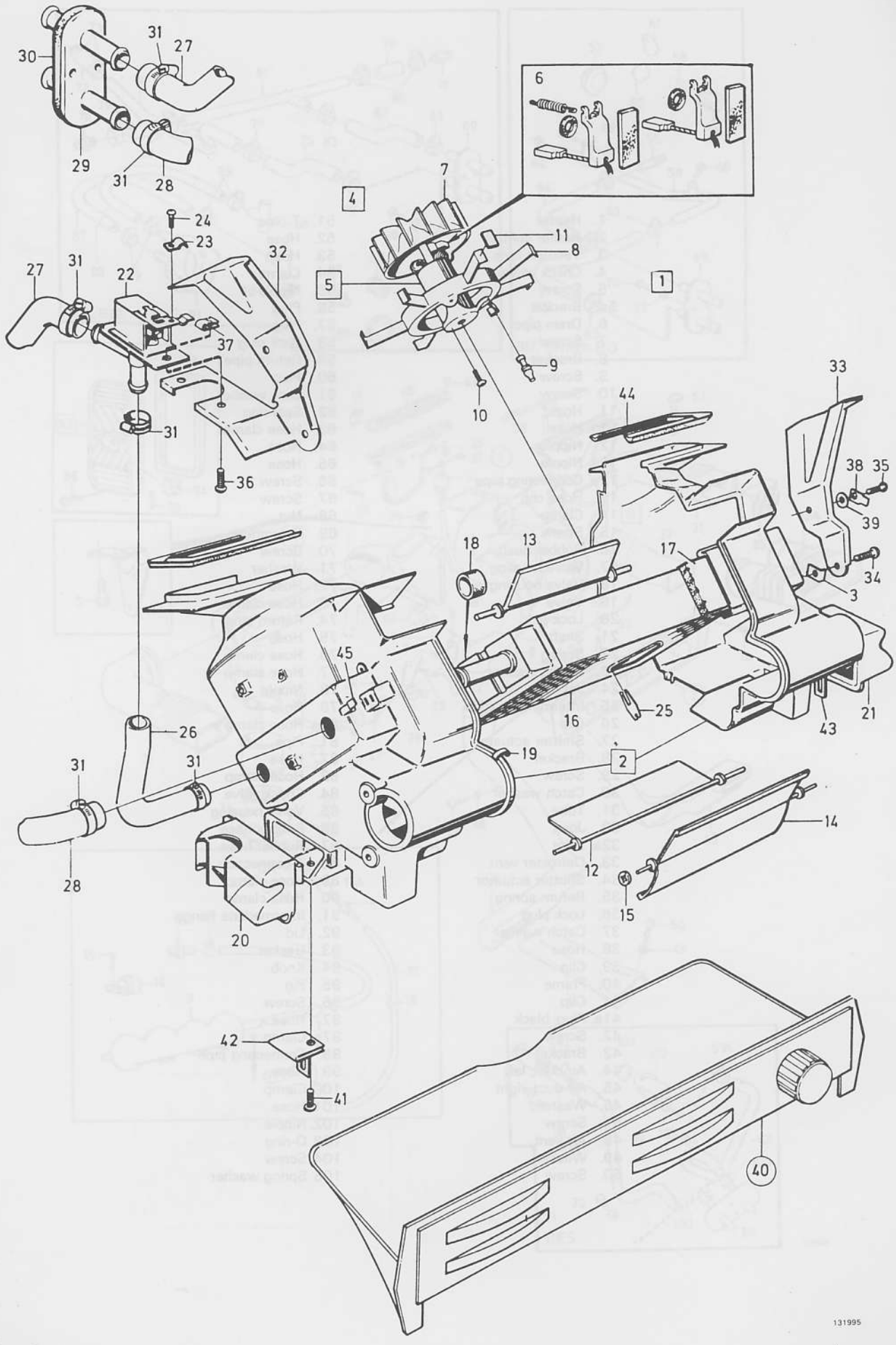

Chart D. Heater housing, standard unit

1. Heater
2. Heater control
3. Vacuum tank
4. Check valve
5. Screw
5a. Bracket
6. Drain pipe
7. Screw
8. Bracket
9. Screw
10. Screw
11. Hose
11a. Hose
12. Nipple
12a. Nipple
12b. Connecting pipe
13. Hose clip
14. Clamp
15. Screw
16. Rubber bush
17. Valve housing
18. Valve housing
19. Valve
20. Lock plug
21. Shaft
22. Spring
23. Spring washer
24. Jet
25. Intermediate tube
26. Clip
27. Shutter actuator
28. Bracket
29. Screw
30. Catch washer
31. Tube
32. Joint
32a. Joint
33. Defroster vent
34. Shutter actuator
35. Return spring
36. Lock plug
37. Catch washer
38. Hose
39. Clip
40. Frame
41. Clip
41a. Plug, black
42. Screw
43. Bracket
44. Air duct, left
45. Air duct, right
46. Washer
47. Screw
48. Air vent
49. Washer
50. Screw
51. T-pipe
52. Hose
53. Hose
54. Clamp
55. Nipple
56. Plug
57. Plug
58. Lock plug
59. Return pipe
60. Plug
61. Lock washer
62. Seal ring
63. Hose clamp
64. Hose
65. Hose
66. Screw
67. Screw
68. Nut
69. Grommet
70. Screw
71. Washer
72. Hose
73. Hose clamp
74. Return pipe
75. Hose
76. Hose clamp
77. Hose clamp
78. Nipple
79. Hose
80. Hose clamp
81. Pipe
82. Hose
83. Hose clamp
84. Check valve
85. Valve housing
86. Rubber hose
87. Rubber hose
88. T-connection
89. Hose clamp
90. Hose clamp
91. Intermediate flange
92. Lid
93. Gasket
94. Knob
95. Pin
96. Screw
97. Hose
97a. Clamp
98. Connecting pipe
99. Hose
100. Clamp
101. Hose
102. Nipple
103. O-ring
104. Screw
105. Spring washer

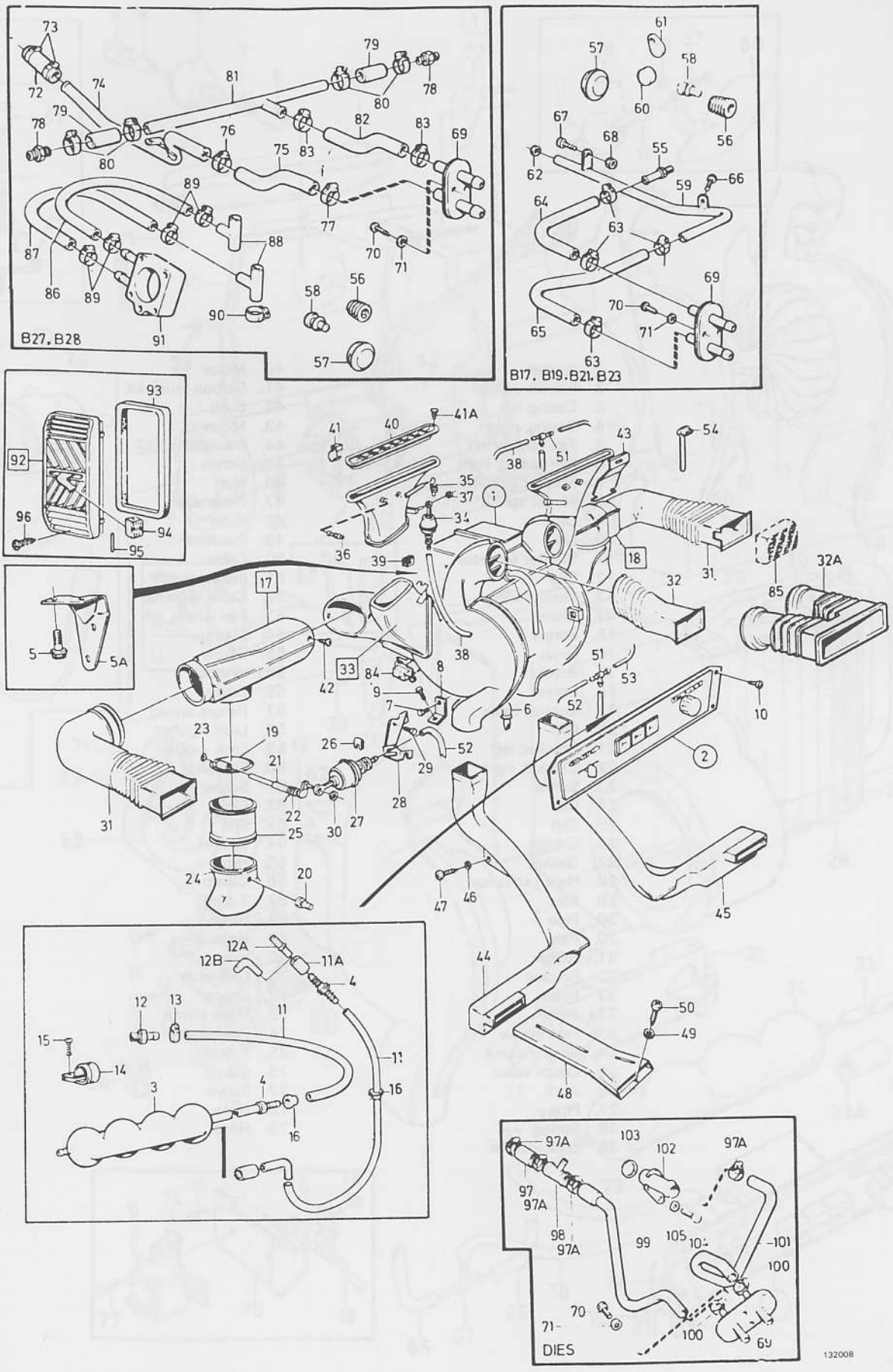

Chart E. Combined heater unit

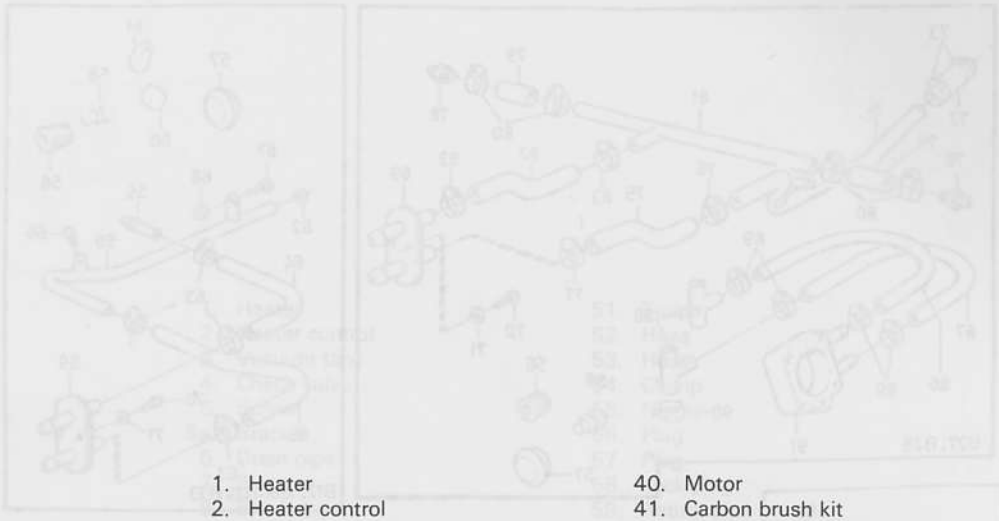

1. Heater
2. Heater control
3. Casing left
4. Casing, right
5. Fan casing, left
6. Fan casing, right
7. Shutter actuator
8. Thrust spring
9. Link
10. Lid
11. Shutter actuator
12. Clip
13. Control valve
14. Clamp
15. Screw
16. Bush
17. Bracket
18. Screw
19. Control cable
20. Clip
21. Bracket, left
22. Bracket, right
23. Screw
24. Clip
25. Clip
26. Gasket
27. Gasket
28. Heat exchanger
29. Pipe
30. Pipe
30. Pipe
31. Screw
32. Bracket
33. Hose
33a. Joint
33b. Pipe elbow
34. Vacuum tank
35. Check valve
36. Joint
37. Pipe
38. Spring
39. Lock washer
40. Motor
41. Carbon brush kit
42. Bush
43. Motor
44. Insulator
45. Screw
46. Nut
47. Resistance
48. Bush
49. Insulator
50. Cable
51. Insulator
52. Cable terminal
53. Fan wheel, left
54. Clamp
55. Screw
55a. Washer
56. Cover
57. Return spring
58. Lock washer
59. Lock washer
60. Shutter
61. Screw
62. Clip
63. Clip
64. Gasket
65. Hose
66. Clamp
67. T-pipe
68. Hose
69. Hose
70. Hose
71. Grommet
72. Spacer
73. Hose clamp
74. Thermostat
75. Bracket
76. Clamp
77. Screw
78. Hose
79. Hose

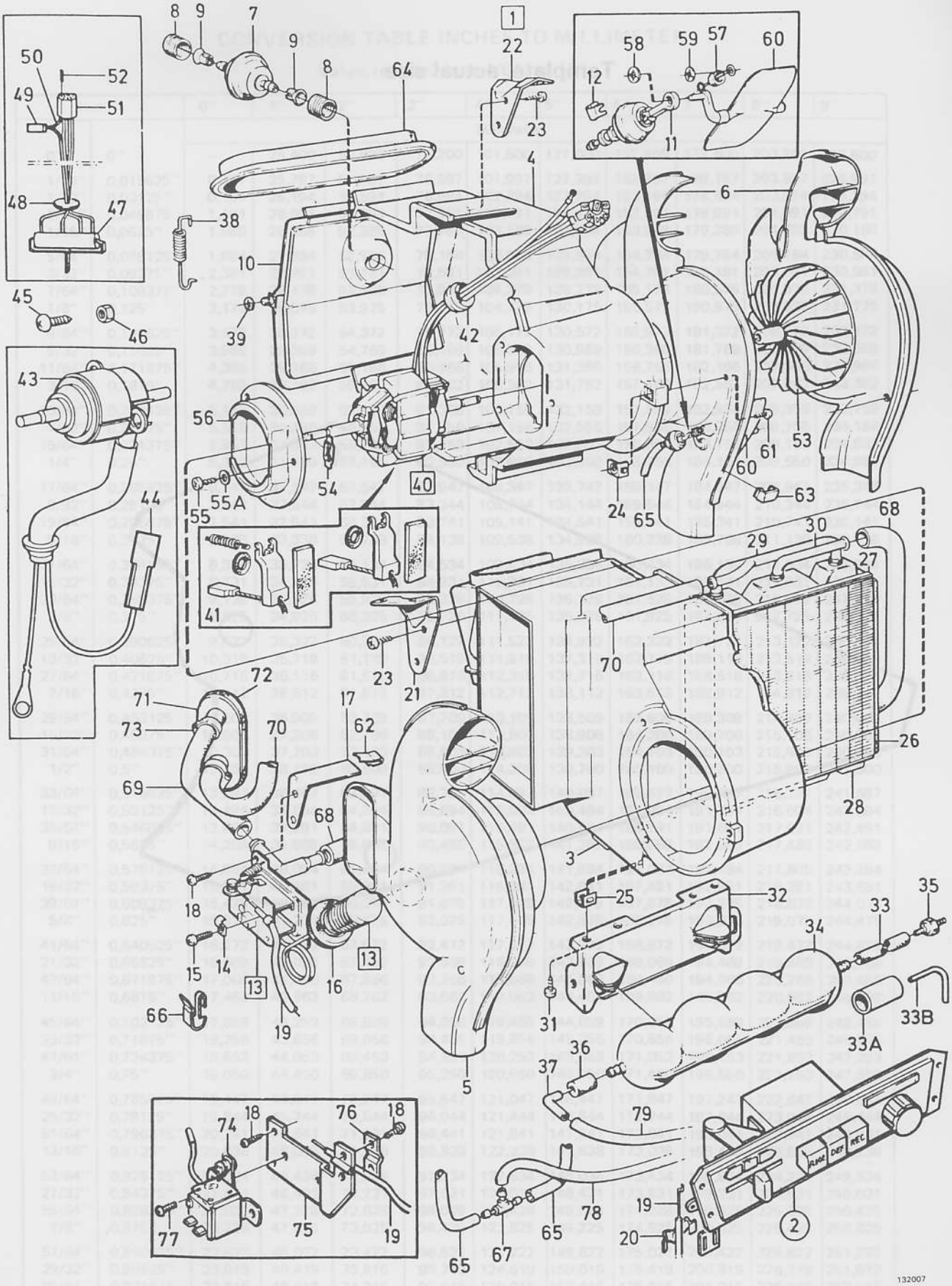

Chart F. Heater housing, CU

Template, actual size

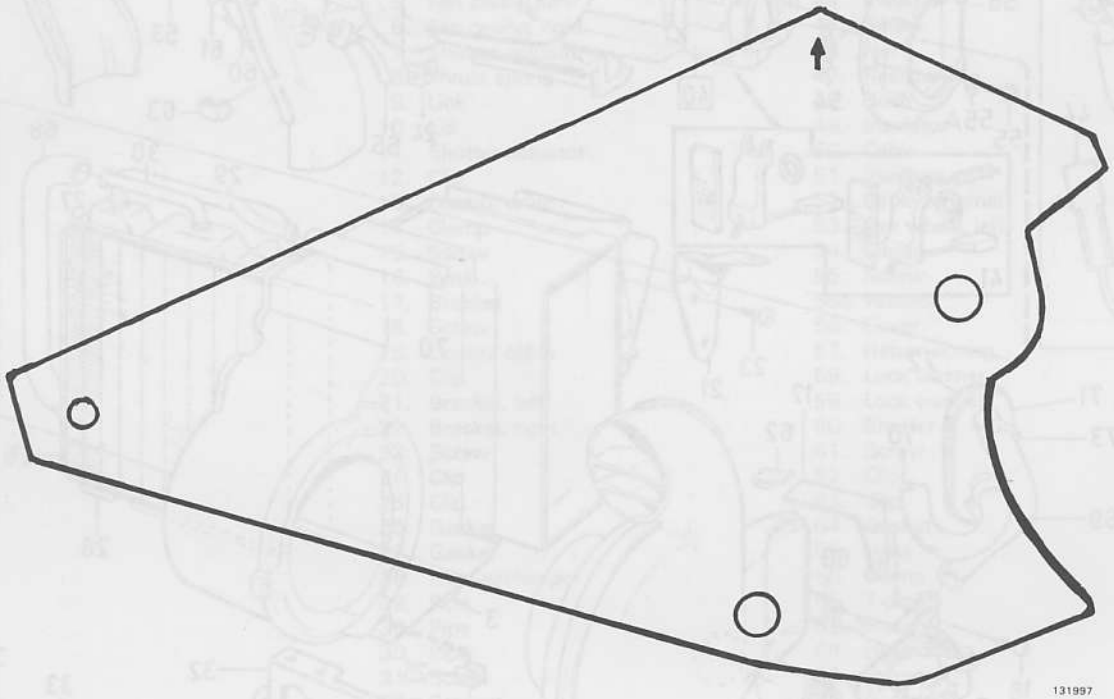

Chart G. Hole template, standard unit

CONVERSION TABLE INCHES TO MILLIMETER

Values rounded from 1/64" to 10"

Inch		0"	1"	2"	3"	4"	5"	6"	7"	8"	9"
		Millimeter									
0"	0"	–	25,400	50,800	76,200	101,600	127,000	152,400	177,800	203,200	228,600
1/64"	0,015625"	0,397	25,797	51,197	76,597	101,997	127,397	152,797	178,197	203,597	228,997
1/32"	0,03125"	0,794	26,194	51,594	76,994	102,394	127,794	153,194	178,594	203,994	229,394
3/64"	0,046875	1,191	26,591	51,991	77,391	102,791	128,191	153,591	178,991	204,391	229,791
1/16"	0,0625"	1,588	26,988	52,388	77,788	103,188	128,588	153,988	179,388	204,788	230,188
5/64"	0,078125"	1,984	27,384	52,784	78,184	103,584	128,984	154,384	179,784	205,184	230,584
3/32"	0,09375"	2,381	27,781	53,181	78,581	103,981	129,381	154,781	180,181	205,581	230,981
7/64"	0,109375"	2,778	28,178	53,578	78,978	104,378	129,778	155,178	180,578	205,978	231,378
1/8"	0,125"	3,175	28,575	53,975	79,375	104,775	130,175	155,575	180,975	206,375	231,775
9/64"	0,140625"	3,572	28,972	54,372	79,772	105,172	130,572	155,972	181,372	206,772	232,172
5/32"	0,15625"	3,969	29,369	54,769	80,169	105,569	130,969	156,369	181,769	207,169	232,569
11/64"	0,171875"	4,366	29,766	55,166	80,566	105,966	131,366	156,766	182,166	207,566	232,966
3/16"	0,1875"	4,762	30,162	55,562	80,962	106,362	131,762	157,162	182,562	207,962	233,362
13/64"	0,203125"	5,159	30,559	55,959	81,359	106,759	132,159	157,559	182,959	208,359	233,759
7/32"	0,21875"	5,556	30,956	56,356	81,756	107,156	132,556	157,956	183,356	208,756	234,156
15/64"	0,234375"	5,953	31,353	56,753	82,153	107,553	132,953	158,353	183,753	209,153	234,553
1/4"	0,25"	6,350	31,750	57,150	82,550	107,950	133,350	158,750	184,150	209,550	234,950
17/64"	0,265625"	6,747	32,147	57,547	82,947	108,347	133,747	159,147	184,547	209,947	235,347
9/32"	0,28125"	7,144	32,544	57,944	83,344	108,744	134,144	159,544	184,944	210,344	235,744
19/64"	0,296875"	7,541	32,941	58,341	83,741	109,141	134,541	159,941	185,341	210,741	236,141
5/16"	0,3125"	7,938	33,338	58,738	84,138	109,538	134,938	160,338	185,738	211,138	236,538
21/64"	0,328125"	8,334	33,734	59,134	84,534	109,934	135,334	160,734	186,134	211,534	236,934
11/32"	0,34375"	8,731	34,131	59,531	84,931	110,331	135,731	161,131	186,531	211,931	237,331
23/64"	0,359375"	9,128	34,528	59,928	85,328	110,728	136,128	161,528	186,928	212,328	237,728
3/8"	0,375"	9,525	34,925	60,325	85,725	111,125	136,525	161,925	187,325	212,725	238,125
25/64"	0,390625"	9,922	35,322	60,722	86,122	111,522	136,922	162,322	187,722	213,122	238,522
13/32"	0,40625"	10,319	35,719	61,119	86,519	111,919	137,319	162,719	188,119	213,519	238,919
27/64"	0,421875"	10,716	36,116	61,516	86,916	112,316	137,716	163,116	188,516	213,916	239,316
7/16"	0,4375"	11,112	36,512	61,912	87,312	112,712	138,112	163,512	188,912	214,312	239,712
29/64"	0,453125	11,509	36,909	62,309	87,709	113,109	138,509	163,909	189,309	214,709	240,109
15/32"	0,46875"	11,906	37,306	62,706	88,106	113,506	138,906	164,306	189,706	215,106	240,506
31/64"	0,484375"	12,303	37,703	63,103	88,503	113,903	139,303	164,703	190,103	215,503	240,903
1/2"	0,5"	12,700	38,100	63,500	88,900	114,300	139,700	165,100	190,500	215,900	241,300
33/64"	0,515625"	13,097	38,497	63,897	89,297	114,697	140,097	165,497	190,897	216,297	241,697
17/32"	0,53125"	13,494	38,894	64,294	89,694	115,094	140,494	165,894	191,294	216,694	242,094
35/64"	0,546875"	13,891	39,291	64,691	90,091	115,491	140,891	166,291	191,691	217,091	242,491
9/16"	0,5625"	14,288	39,688	65,088	90,488	115,888	141,288	166,688	192,088	217,488	242,888
37/64"	0,578125"	14,684	40,084	65,484	90,884	116,284	141,684	167,084	192,484	217,885	243,284
19/32"	0,59375"	15,081	40,481	65,881	91,281	116,681	142,081	167,481	192,881	218,281	243,681
39/64"	0,609375"	15,478	40,878	66,278	91,678	117,078	142,478	167,878	193,278	218,678	244,078
5/8"	0,625"	15,875	41,275	66,675	92,075	117,475	142,875	168,275	193,675	219,075	244,475
41/64"	0,640625"	16,272	41,672	67,072	92,472	117,872	143,272	168,672	194,072	219,472	244,872
21/32"	0,65625"	16,669	42,069	67,469	92,869	118,269	143,669	169,069	194,469	219,869	245,269
43/64"	0,671875"	17,066	42,466	67,866	93,266	118,666	144,066	169,466	194,866	220,266	245,666
11/16"	0,6875"	17,462	42,862	68,262	93,662	119,062	144,462	169,862	195,262	220,662	246,062
45/64"	0,703125"	17,859	43,259	68,659	94,059	119,459	144,859	170,259	195,659	221,059	246,459
23/32"	0,71875"	18,256	43,656	69,056	94,456	119,856	145,256	170,656	196,056	221,456	246,856
47/64"	0,734375"	18,653	44,053	69,453	94,853	120,253	145,653	171,053	196,453	221,853	247,253
3/4"	0,75"	19,050	44,450	69,850	95,250	120,650	146,050	171,450	196,850	222,250	247,650
49/64"	0,765625"	19,447	44,847	70,247	95,647	121,047	146,447	171,847	197,247	222,647	248,047
25/32"	0,78125"	19,844	45,244	70,644	96,044	121,444	146,844	172,244	197,644	223,044	248,444
51/64"	0,796875"	20,241	45,641	71,041	96,441	121,841	147,241	172,641	198,041	223,441	248,841
13/16"	0,8125"	20,638	46,038	71,438	96,838	122,238	147,638	173,038	198,438	223,838	249,238
53/64"	0,828125"	21,034	46,434	71,834	97,234	122,634	148,034	173,434	198,834	224,234	249,634
27/32"	0,84375"	21,431	46,831	72,231	97,631	123,031	148,431	173,831	199,231	224,631	250,031
55/64"	0,859375"	21,828	47,228	72,628	98,028	123,428	148,828	174,228	199,628	225,028	250,428
7/8"	0,875"	22,225	47,625	73,025	98,425	123,825	149,225	174,625	200,025	225,425	250,825
57/64"	0,890625"	22,622	48,022	73,422	98,822	124,222	149,622	175,022	200,422	225,822	251,222
29/32"	0,90625"	23,019	48,419	73,819	99,219	124,619	150,019	175,419	200,819	226,219	251,619
59/64"	0,921875"	23,416	48,816	74,216	99,616	125,016	150,416	175,816	201,216	226,616	252,016
15/16"	0,9375"	23,812	49,212	74,612	100,012	125,412	150,812	176,212	201,612	227,012	252,412
61/64"	0,953125"	24,209	49,609	75,009	100,409	125,809	151,209	176,609	202,009	227,409	252,809
31/32"	0,96875"	24,606	50,006	75,406	100,806	126,206	151,606	177,006	202,406	227,806	253,206
63/64"	0,984375"	25,003	50,403	75,803	101,203	126,603	152,003	177,403	202,803	228,203	253,603

H. Conversion table

Chart G. Hole template, standard

National
Institute for
AUTOMOTIVE
SERVICE
EXCELLENCE

VOLVO SUPPORTS VOLUNTARY
MECHANIC CERTIFICATION
BY THE N.I.A.S.E.

(U.S.A. only)

Service literature

Your
most important
special tool

VOLVO

TP 30282/2
4500.12.83
UK/USA
Printed in USA