Service Manual

Repairs and maintenance

Section 2(21)

Reconditioning engine

D20, D24

1979–19 . . .

VOLVO

D 20, D 24

Both the D 20 and D 24 Diesel engines are dealt with in this manual.

The D 20 has five cylinders and the D 24 six. Otherwise the engines are similar in principle.
Note! Different flywheels and vibration dampers are fitted to the different engine types.

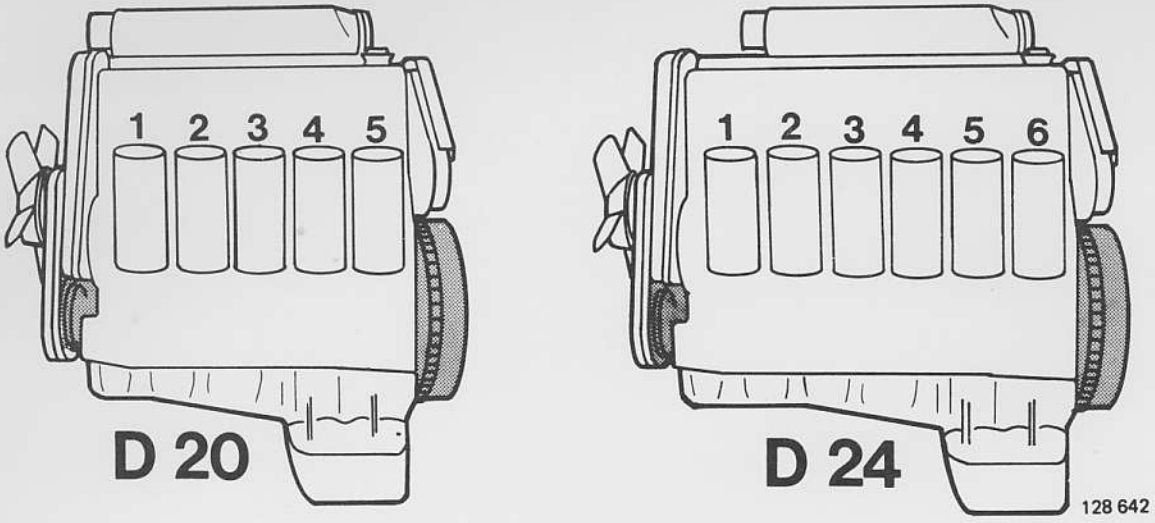

Volvos are sold in versions adapted for different markets. These adaptations depend on many factors including legal, taxation and market requirements.

This manual may therefore show illustrations and text which do not apply to cars in your country.

Contents

		Page
Important information		2
Specifications		3
Special tools		16
Reconditioning engine	**Operation**	
Removing parts from engine	A1–15	19
Disassembly	B1–18	24
Cleaning, checking	C1–28	29
Reassembly	D1–30	36
Cylinder head, assembly	E1–11	43
cleaning, checking	F1–21	46
reassembly	G1–14	51
installation	H1–8	55
Installation, (cont.)	J1–20	59
Installing parts on engine	K1–27	65

Index page 74

This manual deals exclusively with the overhaul of the engine. For work carried out on the engine when fitted in the car, and for engine removal and installation, please refer to the service manual Section 2(20–22) and Section 2(23–29).

TP 30224/2 US
UK/USA
6000. 05.83
PRINTED IN USA

We reserve the right to make alterations

Important information

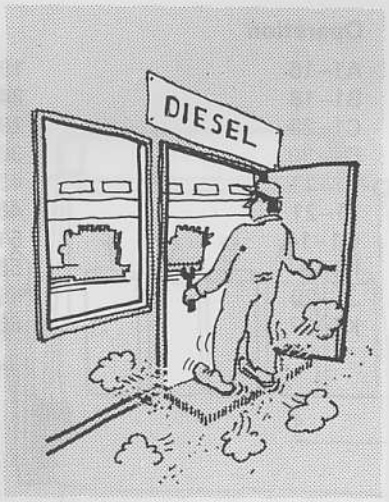

128 679

CLEANLINESS

Diesel injection systems are extremely sensitive to dirt and foreign matter. A special workplace should therefore be used for inspection of components.

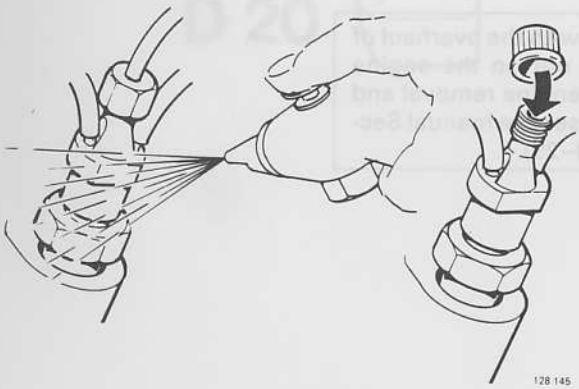

128 145

PLUGS

Clean fuel line connections thoroughly before disconnecting them. Plug ends of fuel lines etc as each component is removed. Do not remove these plugs until the component is reconnected.

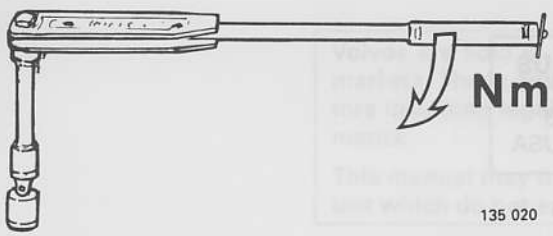

135 020

Tightening torques

Two kinds of tightening torques will be found in this manual

1. Tighten to **40 Nm** (30 ft lbs) indicates that a torque wrench must be used for tightening.
2. Tightening torque 40 Nm (30 ft lbs) indicates a guide value. Tightening need not be done with a torque wrench.

Specifications

Group 20 General

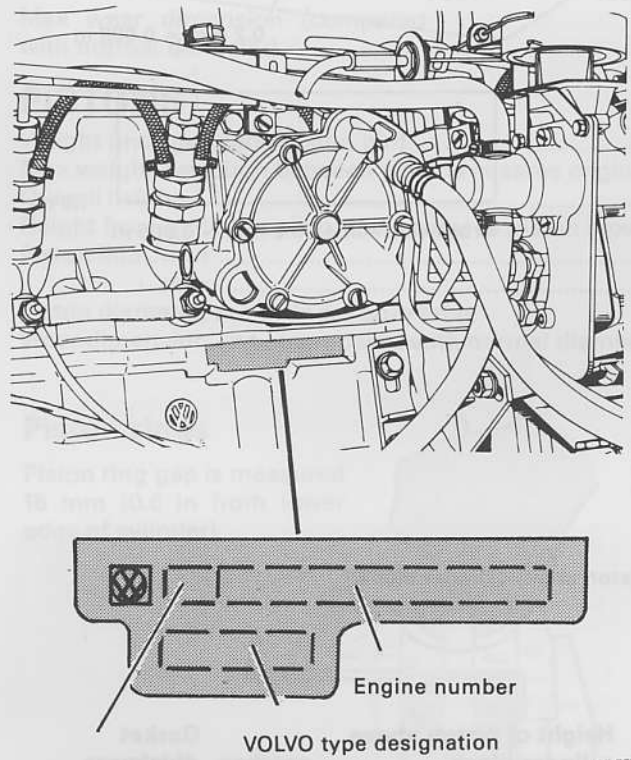

Engine type designation and serial number

Stamped in left side of cylinder block beneath vacuum pump.

Group 21 Engine block

CYLINDER HEAD

Max warp

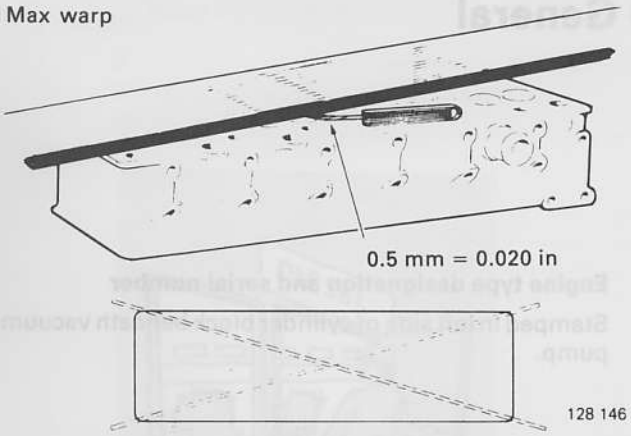

Diagonally = max 0.5 mm = 0.020 in

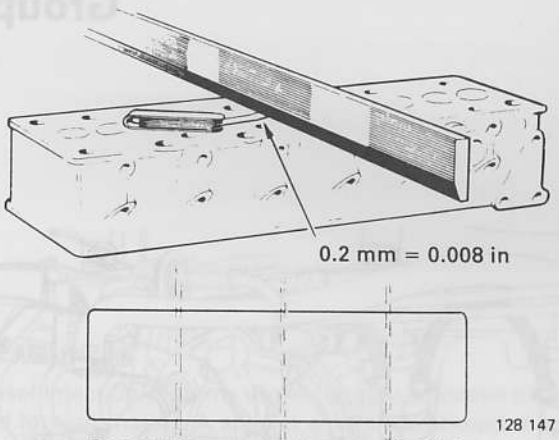

Crosswise = max 0.2 mm = 0.008 in

Cylinder head may not be machined. It must be replaced if warp exceeds maximum.

Cylinder head gasket

Three alternative gaskets are used depending on height of piston above cylinder block.

Marked by notch

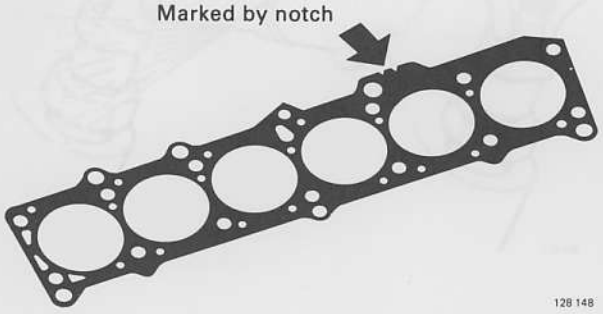

Height of piston above cylinder block		notches	Gasket thickness	
mm	in		mm	in
0.67–0.80	0.026–0.031	1	1.4	0.055
0.81–0.90	0.032–0.035	2	1.5	0.059
0.91–1.02	0.036–0.040	3	1.6	0.063

Note! Piston height in same engine must not extend over more than two classes. Piston height is measured at front and back of piston (along gudgeon/piston pin).

CYLINDER BLOCK

Bore	Marking	Piston diameter mm	Piston diameter in	Cylinder bore mm	Cylinder bore in
Standard	651	76.48	3.0110	76.51	3.0122
	652	76.49	3.0114	76.52	3.0125
	653	76.50	3.0118	76.53	3.0130
Oversize 1	676	76.73	3.0209	76.76	3.0220
(0.25 mm = 0.010 in)	677	76.74	3.0212	76.77	3.0224
	678	76.75	3.0217	76.78	3.0228
Oversize 2	701	76.98	3.0307	77.01	3.0318
(0.50 mm = 0.020 in)	702	76.99	3.0311	77.02	3.0322
	703	77.00	3.0315	77.03	3.0326
Oversize 3	751	77.48	3.0504	77.51	3.0515
(1.00 mm = 0.040 in)	752	77.49	3.0508	77.52	3.0519
	753	77.50	3.0512	77.53	3.0523

Max wear dimension (compared with normal diameter) 0.04 mm 0.016 in

PISTONS

Weight (incl. gudgeon/piston pin)	455–465 grammes	
Max weight deviation between pistons in same engine	12 grammes	
Overall height	71.7 mm	2.8228 in
Height from gudgeon/piston pin center to piston crown	41.7 mm	1.6417 in
Piston float, new	0.03–0.05 mm	
max	0.13 mm	0.0051 in
Piston diameter, see cylinder bore table		
Wear dimension, max (compared with normal diameter)	0.04 mm	0.0016 in

Piston rings

Piston ring gap is measured 15 mm (0.6 in from lower edge of cylinder).

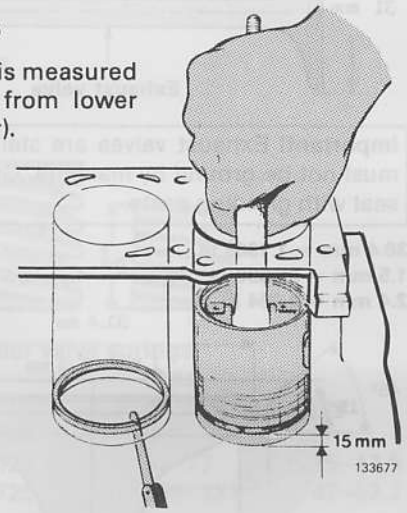

Piston diameter is measured at right angles to gudgeon/piston pin bore, 15 mm (0.6 in) from lower edge.

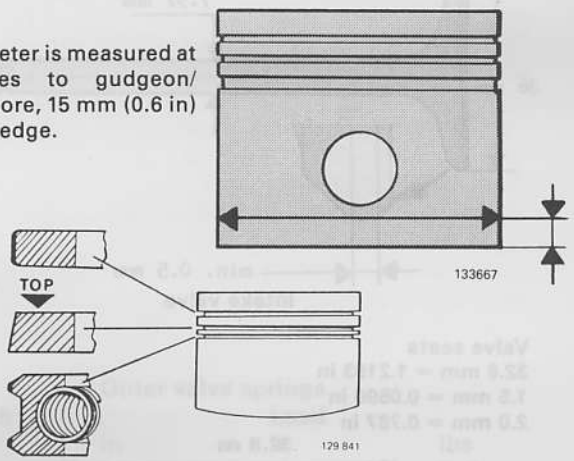

		Upper compression ring	Lower compression ring	Oil scraper ring
Ring thickness	mm	1.730	1.980–1.990	2.975–2.990
	in	0.0681–0.0685	0.0780–0.0783	0.1171–0.1177
Side clearance (measured with ring on piston), new	mm	0.06–0.09	0.05–0.08	0.03–0.06
	in	0.0024–0.0035	0.0020–0.0031	0.0012–0.0024
max	mm	0.2	0.2	0.15
	in	0.0079	0.0079	0.0059
Ring gap (measured in cylinder, see fig.), new	mm	0.3–0.5	0.3–0.5	0.25–0.40
	in	0.012–0.020	0.012–0.020	0.0098–0.0157
max	mm	1.0	1.0	1.0
	in	0.040	0.040	0.040

Gudgeon/piston pins

Fit, in connecting rod	Light thumb pressure (close running fit)
in piston	Thumb pressure (push fit)

VALVE SYSTEM

Valve clearances

D 20

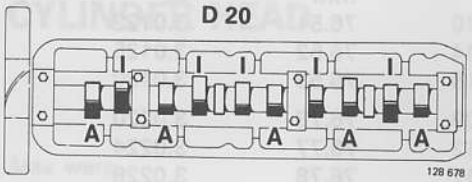

D 24

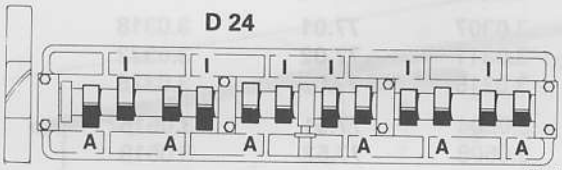

Cold engine = engine at room temperature

I = intake valves
A = exhaust valves

Check/adjust valves in following order:

D 20 = 1-2-4-5-3
D 24 = 1-5-3-6-2-4

	Checking		Setting	
	mm	in	mm	in
Intake valve, warm engine	0.20–0.30	0.008–0.012	0.25	0.010
cold engine	0.15–0.25	0.006–0.010	0.20	0.008
Exhaust valve, warm engine	0.40–0.50	0.016–0.020	0.45	0.018
cold engine	0.35–0.45	0.014–0.018	0.40	0.016
Shims, thickness	3.00–4.25 at increments of 0.05 mm			
	0.012–0.167 at increments of 0.002 in			

Valves
7.97 mm = 0.3137 in
36 mm = 1.417 in 0.5 mm = 0.020 in

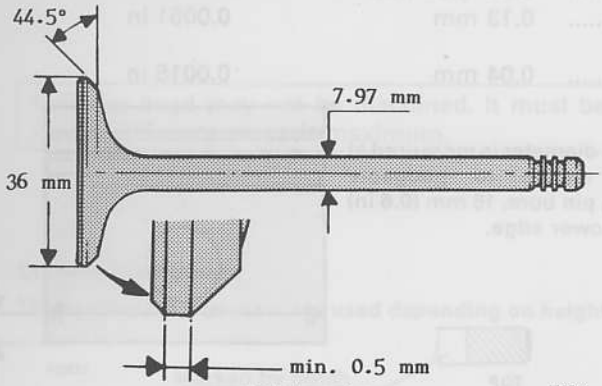

Intake valve 133714

7.95 mm = 0.3129 in
31 mm = 1.22 in

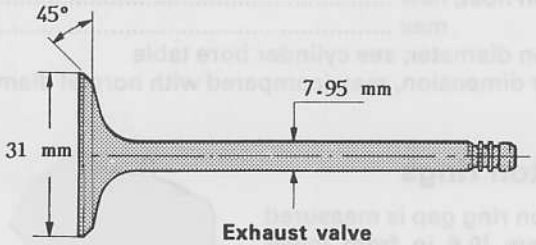

Exhaust valve 133715

Important! Exhaust valves are stellite coated and must not be ground by machine. Grind-in valve on seat with grinding paste.

Valve seats
32.8 mm = 1.2193 in
1.5 mm = 0.0590 in
2.0 mm = 0.787 in

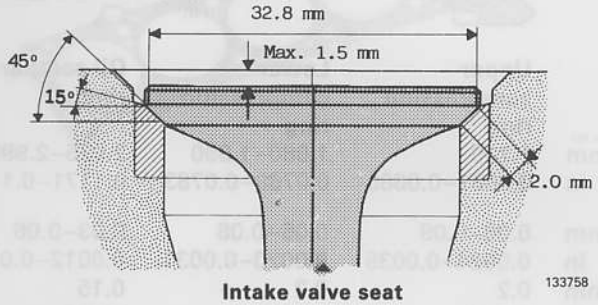

Intake valve seat 133758

30.4 mm = 1.1968 in
1.5 mm = 0.0590 in
2.4 mm = 0.094 in

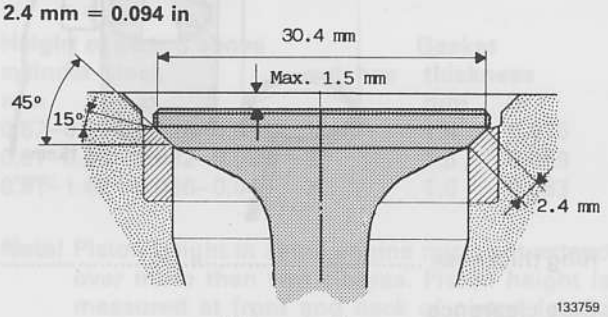

133759

Exhaust valve seat

		Intake	Exhaust
Valve seat diameter, standard	mm	37.090–37.105	33.090–33.105
	in	1.4602–1.4608	1.3027–1.3033
oversize 1	mm	37.290–37.305	33.290–33.305
	in	1.4681–1.4687	1.3106–1.3112
Seat width in cylinder head:			
diameter, standard	mm	37.000–37.016	33.000–33.016
	in	1.4566–1.4573	1.2992–1.2998
oversize 1	mm	37.200–37.216	33.200–33.216
	in	1.4645–1.4651	1.3070–1.3077

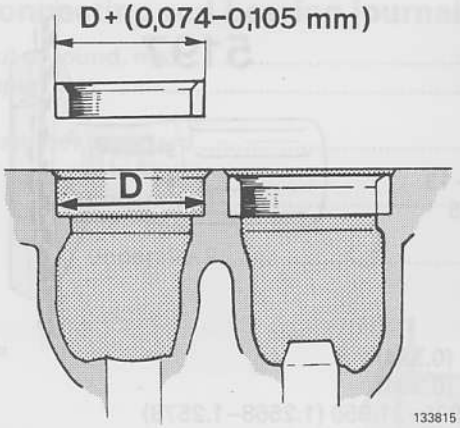

Note! When replacing valve seats: the interference between the valve seat and its bore in the cylinder head shall be 0.074–0.105 mm (0.029–0.041 in). That is, valve seat diameter must be 0.074–0.105 mm greater than the diameter of the bore in the cylinder head.

Valve guides mm (in)

Length	36.50–36.75 (1.4370–1.4468)
Inner diameter	8.000–8.015 (0.3149–0.3155)
Height above cylinder head lower surface	40.1–40.5 (1.5787–1.5944)
Clearance, valve stem-guide (see fig.), new	0.3 (0.018)
max	1.3 (0.0511)

Clearance is measured with new valve and with valve stem flush with valve guide.

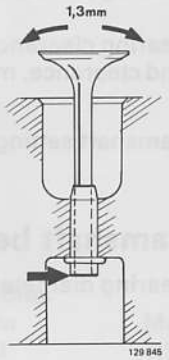

Valve springs

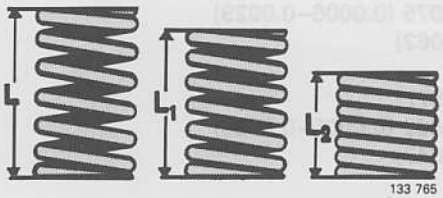

Inner valve springs				Outer valve springs			
Length		Load		Length		Load	
mm	in	N	lbs	mm	in	N	lbs
33.9	1.334	0	0	40.2	1.583	0	0
28.6	1.126	67–77	15–17.5	32.6	1.283	167–185	38–42
18.3	0.720	209–231	47–52.2	22.3	0.878	433–479	98–108

Tappets

Diameter	34.950–34.975 (1.3759–1.3769)
Height	28.0–28.8 (1.1023–1.1388)
Clearance, shim-tappet	0.016–0.046 (0.0006–0.0018)
tappet-cylinder head	0.025–0.075 (0.0010–0.0029)

Shims (for adjusting valve clearance)

Thickness	3.00–4.25 mm at increments of 0.05 mm 0.118–0.167 at increments of 0.002 in
Diameter	30.950–30.975 (1.2185–1.2194)

TIMING GEARS

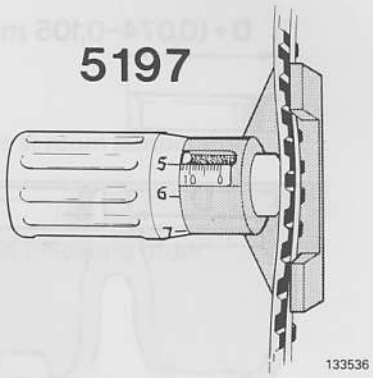

Toothed belts

Belt tension (measured with tool 5197)	
check value	12–13
setting	12.5

Camshaft

Max lift height, intake	8.5 (0.334)
exhaust	9.0 (0.354)
Bearing journal diameter, front	31.925–31.950 (1.2568–1.2578)
others	29.939–29.960 (1.1787–1.795)
Bearing clearance, new	0.05–0.10 (0.0019–0.0039)
End clearance, max	0.15 (0.006)

Camshaft setting is checked by using gauge 5190

Camshaft bearings

Bearing diameter, front	32.000–32.025 (1.2598–1.2608)
other three	30.000–30.021 (1.1811–1.1819)

Crankshaft

Max run-out, two center bearings	0.06 (0.0023)
others	0.04 (0.0015)
Crankshaft end clearance, new	0.07–0.18 (0.0027–0.0071)
max	0.25 (0.0098)
Main bearing clearance, new	0.016–0.075 (0.0006–0.0029)
max	0.16 (0.0062)
Connecting rod bearings, side clearance, max	0.4 (0.0157)
repairing clearance, new	0.015–0.062 (0.0005–0.0024)
max	0.12 (0.0047)

Measured with two outer main bearings in V-blocks.

Main bearing journals

Out of round, max	0.003 (0.0001)
Taper, max	0.005 (0.0002)
Diameter standard	58.00 (57.955–57,975) mm 2.2834 (2.2816–2.2824) in
undersize 1	57.75 (57.705–57.725) mm 2.2736 (2.2718–2.2726) in
undersize 2	57.50 (57.455–57.475) mm 2.2539 (2.2521–2.2529) in
undersize 3	57.25 (57.205–27.225) mm 2.2342 (2.2324–2.2332) in

Connecting rod bearing journals

Out of round, max	0.003 (0.0001)
Taper, max	0.005 (0.0002)
Diameter, standard	47.80 (47.758–47.778) 1.8118 (1.8802–1.8810) in
undersize 1	47.55 (47.508–47.528) mm 1.8720 (1.8703–1.8711) in
undersize 2	47.30 (47.258–47.278) mm 1.8622 (1.8605–1.8613) in

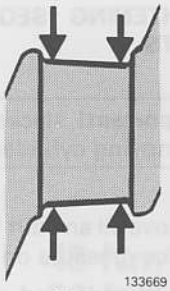

Taper

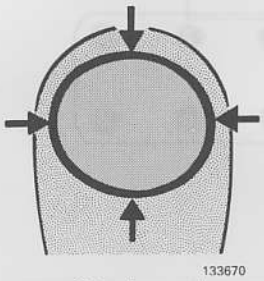

Out-of-round

Main bearing journals (when grinding)

		Width, bearing recess		Radius	
		Min	Max	Min	Max
Thrust bearing journal	mm	22.5	23.0	1.0	1.5
	in	0.8858	0.9055	0.0393	0.0590
Other main journals	mm	21.5	22.0	1.0	1.5
	in	0.8464	0.8661	0.0393	0.0590
Connecting rod journals	mm	24.6	25.0	2.0	2.5
	in	0.9658	0.9842	0.0787	0.9842

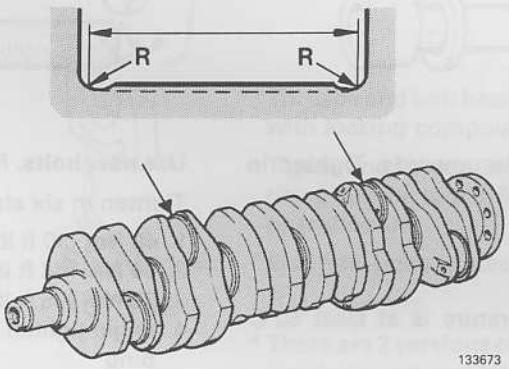

Connecting rods

Only to be replaced in sets

Side clearance on crankshaft, max	0.4 mm (0.0157 in)
Length between centers	136 mm (5.3543 in)
Max weight deviation between connecting rods in same engine	6 grammes

Flywheel

Warp, max	0.05 mm at 150 mm diameter 0.0019 in at 5.90 in diameter

TIGHTENING TORQUES

Tightening torques apply to oiled nuts and bolts. Degreased (washed) parts must be oiled prior to assembly.



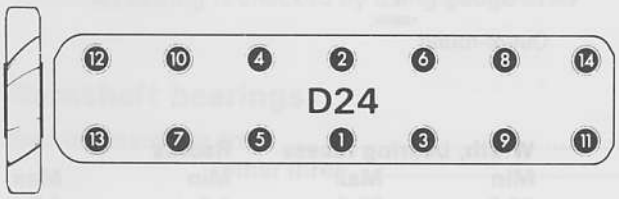

TIGHTENING SEQUENCE FOR CYLINDER HEAD BOLTS

Important! slacken bolts in reverse order when removing cylinder head.

Remove oil and dirt from bolt holes. Oil left in holes will reduce pressure on cylinder head gasket.

Bolt threads and washers must however be oiled, otherwise frictional forces will be too large.

Two types of bolts are in use: An early type with M 11 threads and a later type with M 12 threads. (Later type is threaded along entire length.)

TIGHTENING OF CYLINDER HEAD BOLTS

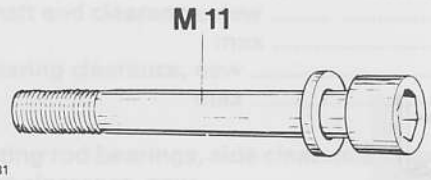

Use **new washers,** convex side upwards. Tighten in five stages:

1. **50 Nm** (37 ft lbs)
2. **70 Nm** (50 ft lbs)
3. **90 Nm** (65 ft lbs)
4. run engine until oil temperature is at least 50°C (122°F)
5. **90 Nm** (65 ft lbs)

Retightening

– After 600–1,200 miles (1,000–2,000 km). Engine should be cold or almost cold. Tighten each bolt separately in specified order, see above fig.:

1. Slacken bolt **30°**
2. Torque to **90 Nm** (65 ft lbs)

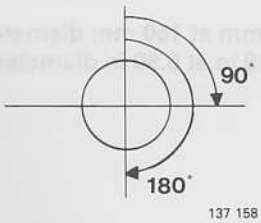

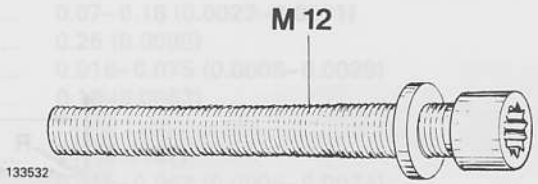

Use **new bolts.** Not necessary to replace washers.

Tighten in six stages:

1. **40 Nm** (30 ft lbs)
2. **60 Nm** (44 ft lbs)
3. **75 Nm** (55 ft lbs)
4. angle-tighten **180°** in one movement without stopping
5. run engine until oil temperature is at least 50°C (122°F)
6. angle-tighten **90°** in one movement without stopping

Retightening

After 600–1,200 miles (1,000–2,000 km). Engine should be cold or almost cold.

Tighten each bolt separately in specified order, see above fig.:

1. Angle-tighten bolt **90°** in one movement without stopping.
   Do not slacken bolt first.

Crankshaft assembly

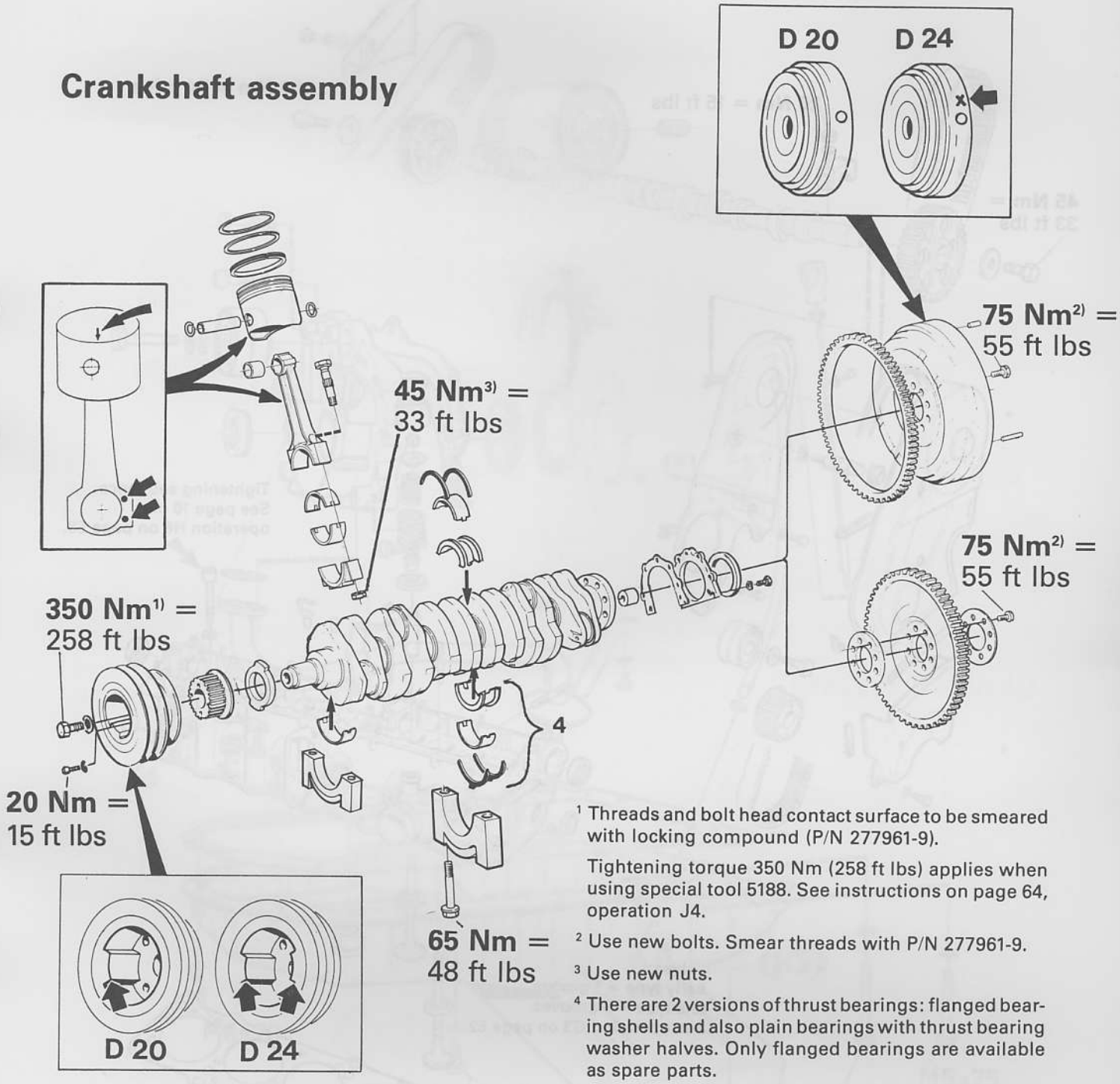

[1] Threads and bolt head contact surface to be smeared with locking compound (P/N 277961-9).

Tightening torque 350 Nm (258 ft lbs) applies when using special tool 5188. See instructions on page 64, operation J4.

[2] Use new bolts. Smear threads with P/N 277961-9.

[3] Use new nuts.

[4] There are 2 versions of thrust bearings: flanged bearing shells and also plain bearings with thrust bearing washer halves. Only flanged bearings are available as spare parts.

Timing gears, cylinder head

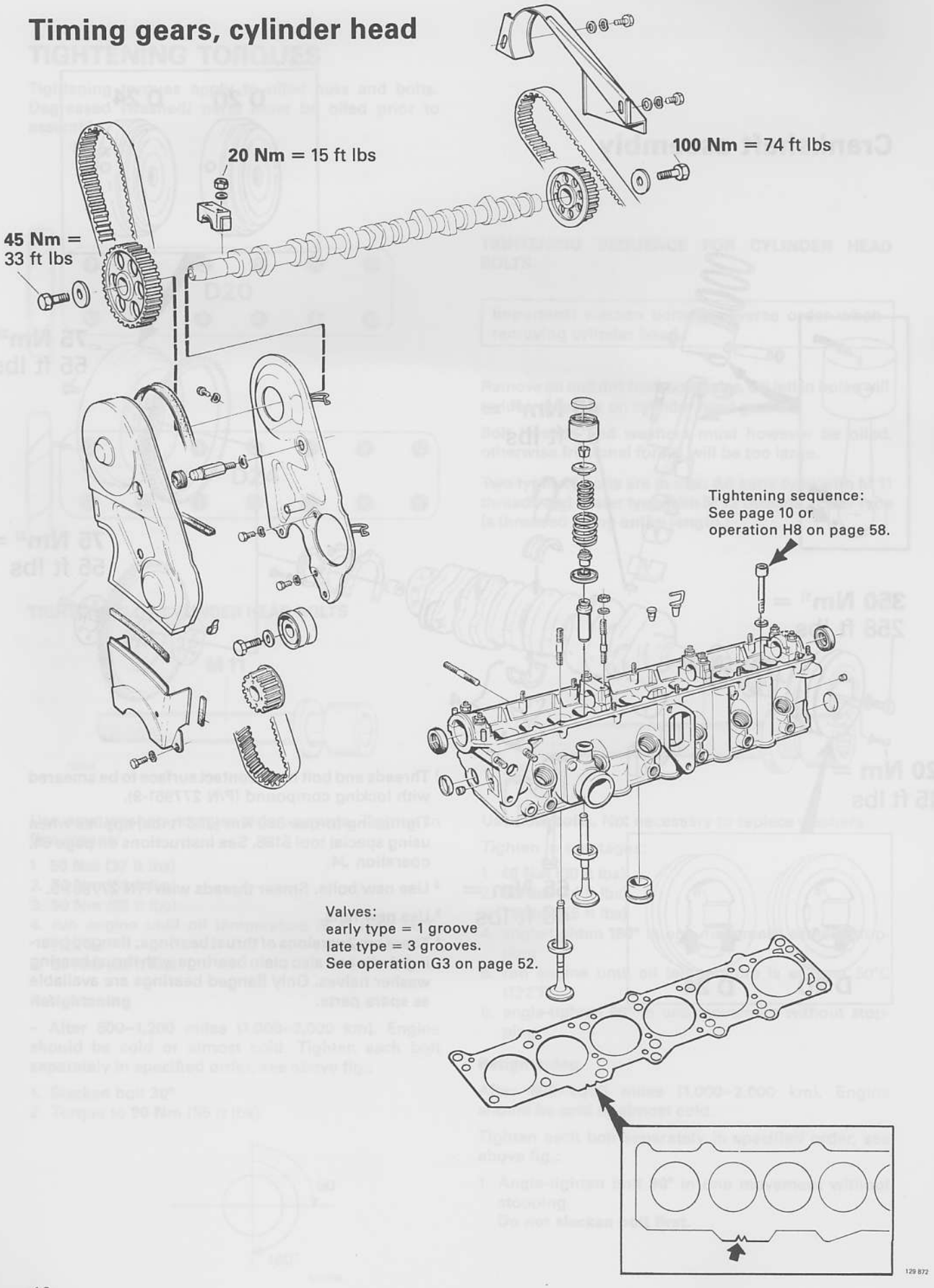

Lubricating system

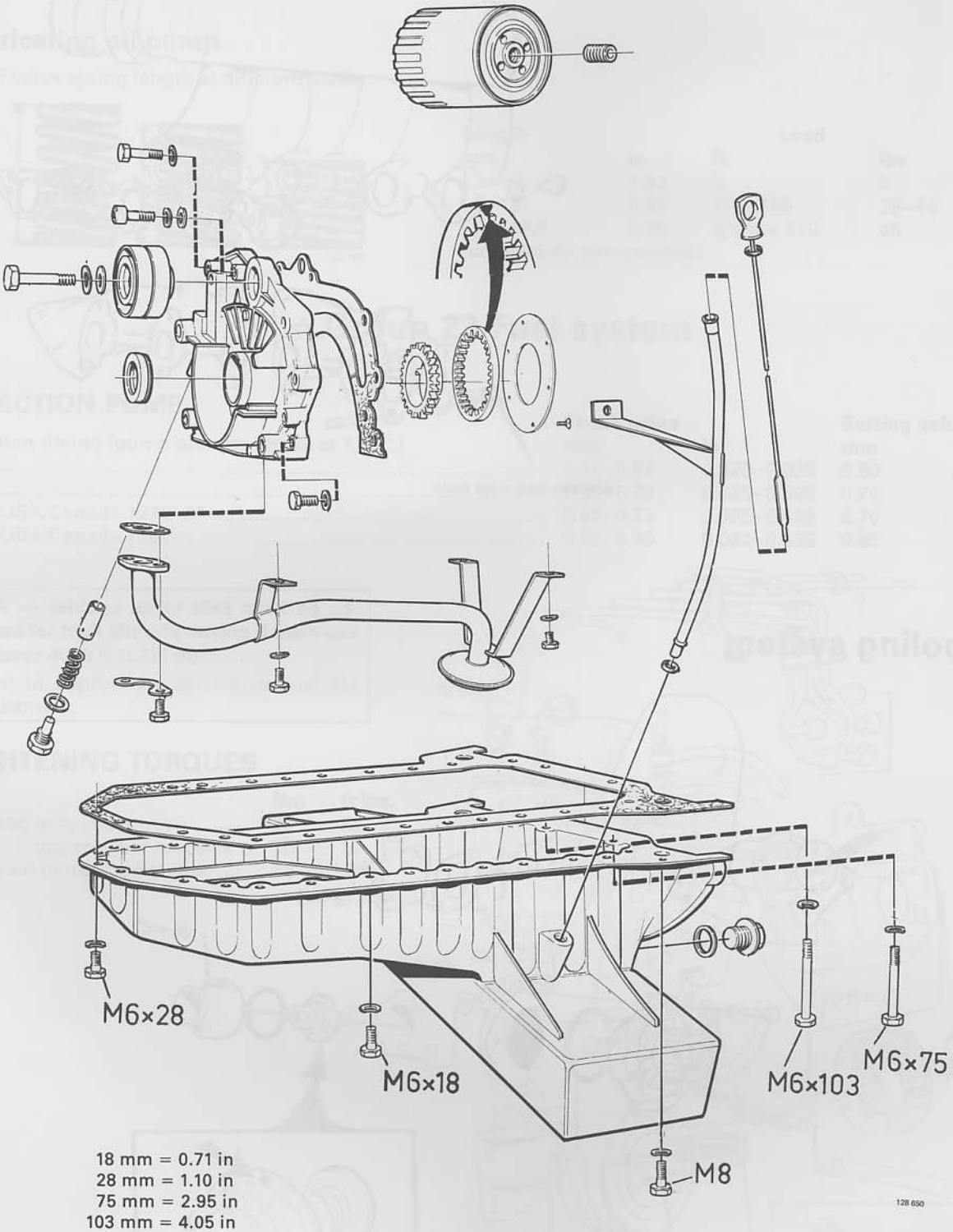

18 mm = 0.71 in
28 mm = 1.10 in
75 mm = 2.95 in
103 mm = 4.05 in

Intake and exhaust manifolds

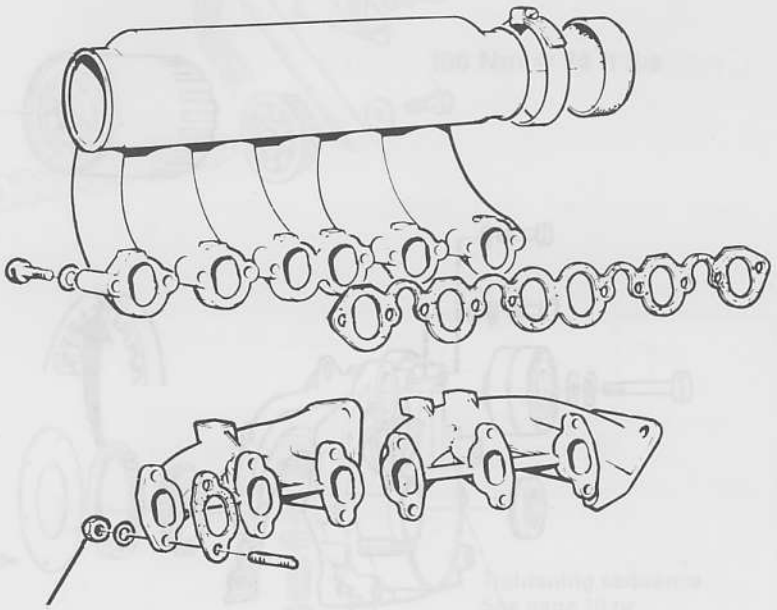

Always use new nuts

Cooling system

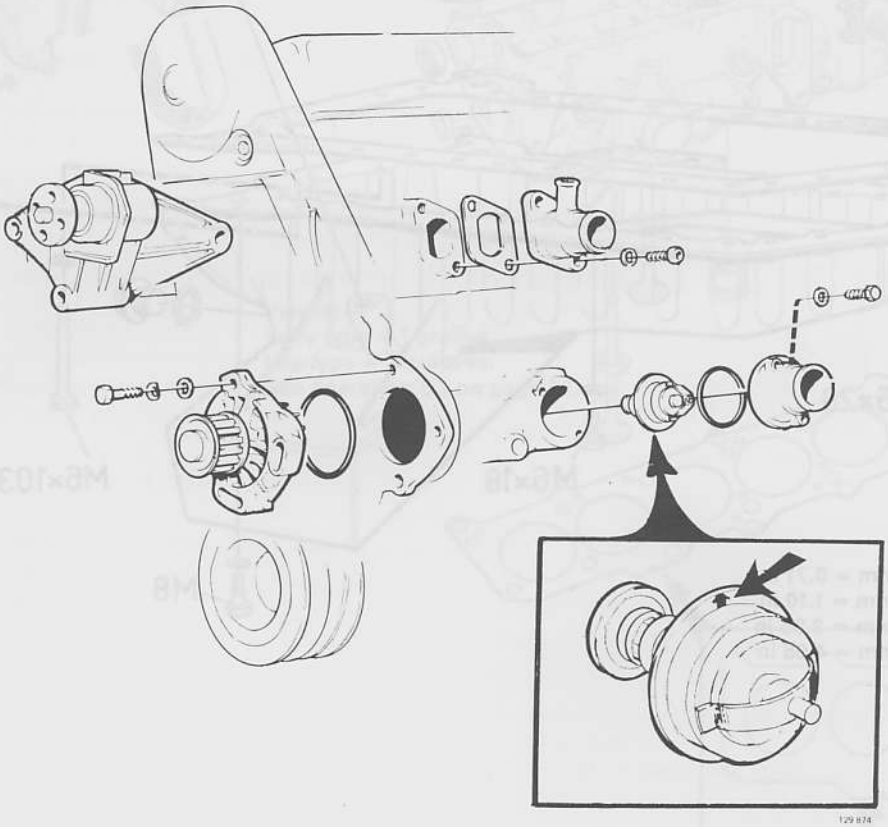

Group 22 Lubricating system

Oil pressure sensor

Cut-out point, indicator lamp goes out at ..... 15–45 kPa 2.1–6.4 psi

Lubricating oil pump

Relief valve spring length at different loads:

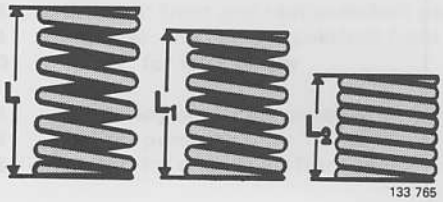

Length		Load	
mm	in	N	lbs
L = 49	1.93	0	0
L_1 = 22	0.87	179–195	39–44
L_2 = 19.8 (completely compressed)	0.78	approx 200	45

Group 23 Fuel system

INJECTION PUMP

Injection timing (pump plunger stroke at T.D.C.)	Check value		Setting value	
	mm	in	mm	in
D 20	0.75–0.83	0.029–0.033	0.80	0.031
D 24	0.65–0.73	0.025–0.029	0.70	0.027
D 24 USA/Canada 1979–81	0.65–0.73	0.025–0.029	0.70	0.027
D 24 USA/Canada 1982-	0.82–0.90	0.032–0.035	0.85	0.033

USA — vehicles up to 1983 must be adjusted for high altitude driving if main use is above 4000 ft (1,219 m):

Refer to appropriate service manual for adjustment.

TIGHTENING TORQUES

	Nm	ft lbs
Injector, in cylinder head	70	52
upper-lower sections ...	70	52
Injection pump, pump gear	45	33

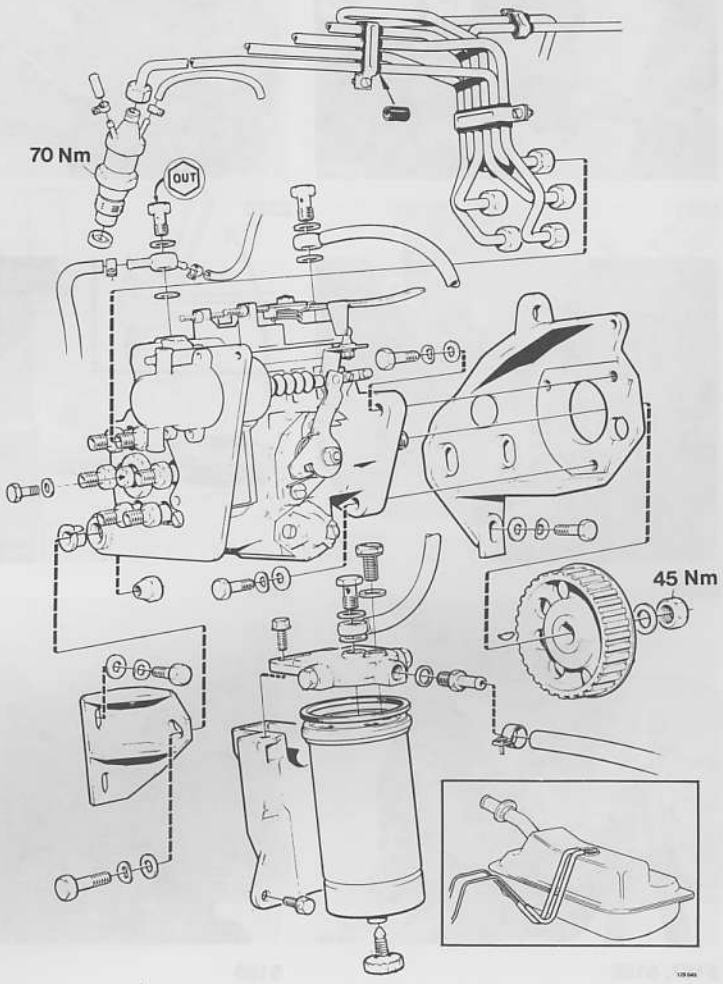

Special tools

999	Description – Use
1801-3	**Standard handle:** used with 5207 and 5208
2520-8	**Stand:** used with fixture 5206
2903-6	**Oil filter wrench**
4090-0	**Puller:** removing pilot bearing
5017-2	**Drift:** removing/installing crankshaft bushings
5112-1	**Locking sector:** locking flywheel
5187-3	**Wrench:** vibration damper
5188-1	**Wrench with extension arm:** for vibration damper center bolt
5190-7	**Gauge:** installing camshaft
5192-3	**Support for dial indicator:** measuring piston height

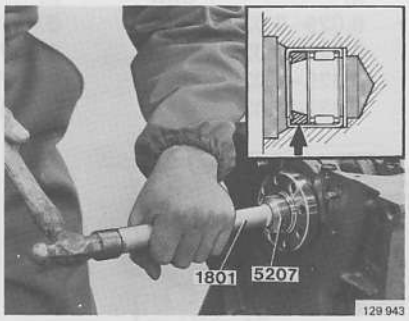

1801

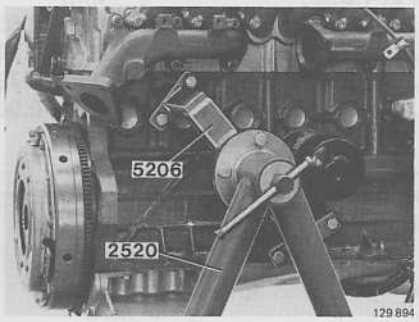

2520

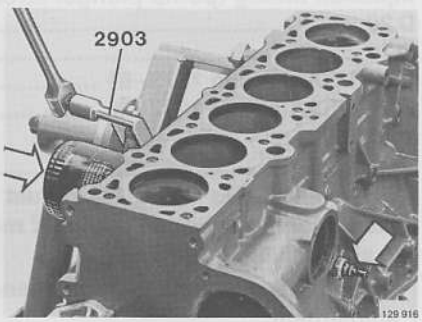

2903

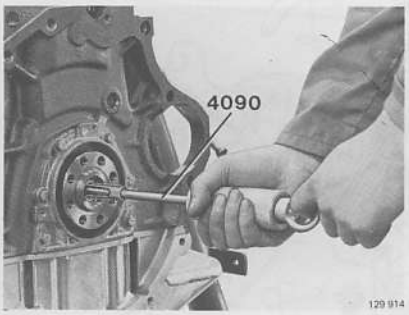

4090

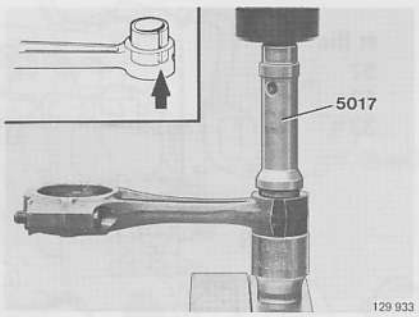

5017

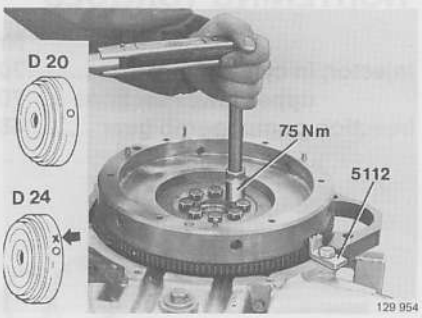

5112

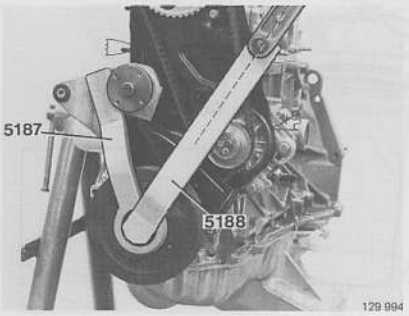

5187, 5188

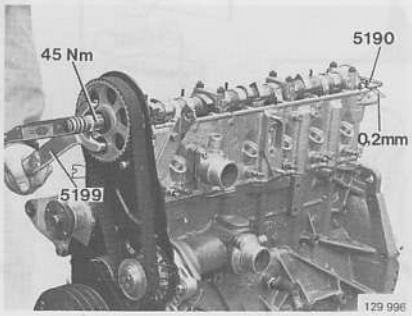

5190

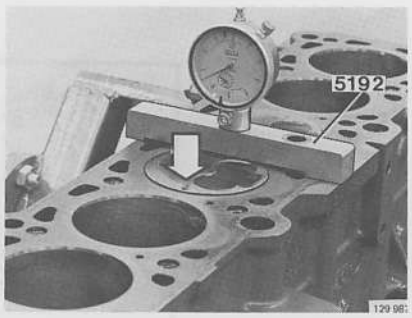

5192

SPECIAL TOOLS (CONT.)

999	Description – Use
5193-1	**Stop:** locking injection pump gear
5194-9	**Holder:** for dial indicator when adjusting injection pump
5195-6	**Pliers:** removing valve discs
5196-4	**Press tool:** for valve tappets
5197-2	**Belt tension gauge:** timing gear belts and pump drive
5198-0	**Straight edge:** setting T.D.C. for cylinder 1 (flywheel casing removed)
5199-8	**Wrench:** front and rear camshaft gears
5200-4	**Adapter:** installing crankshaft front seal and camshaft seals
5202-0	**Puller:** for idler pulley
5203-8	**Centering shaft:** for clutch driven plate
5204-6	**Puller:** pump gear
5205-3	**Puller:** for crankshaft front seal
5206-1	**Fixture:** for engine
5207-9	**Drift:** installing needle bearing in crankshaft
5208-7	**Drift:** installing crankshaft rear seal
5218-6	**Drift:** removing/installing valve guides
5219-4	**Tool:** removing/installing valve seals
5220-2	**Drift:** installing intake valve seat
5221-0	**Drift:** installing exhaust valve seat
5222-8	**Gauge:** checking valve height in relation to camshaft
5224-4	**Reamer:** valve guide
5223-5	**Guide pins M11 bolts (4 ×):** installing cylinder head
5234-3	**Guide pins M12 bolts (4 ×):** installing cylinder head
5235-0	**Tool:** for removing guide pins

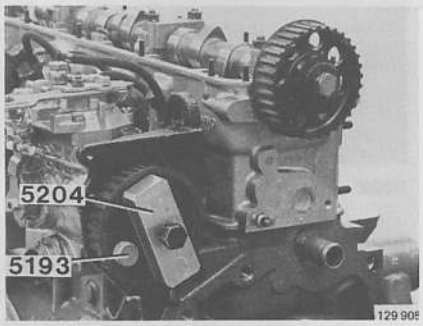

5193

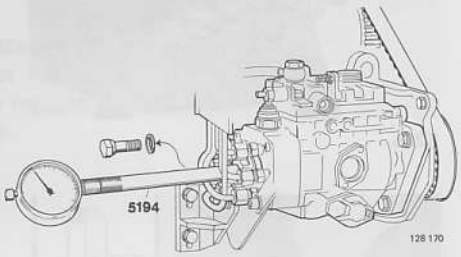

5194

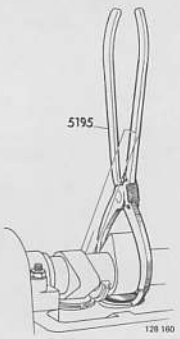

5195

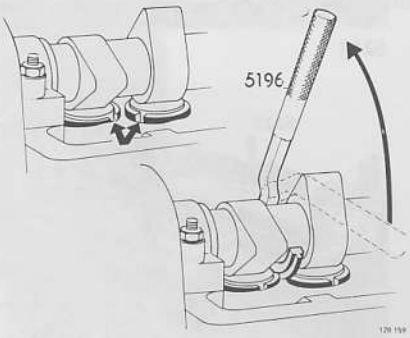

5196

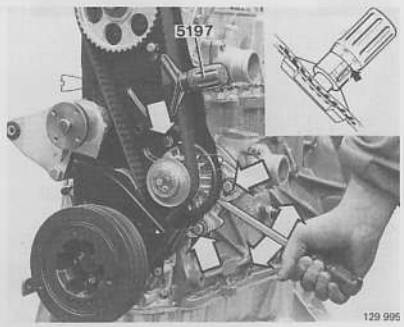

5197

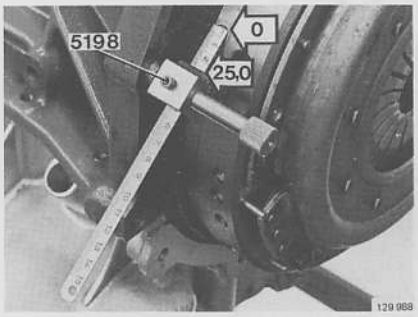

5198

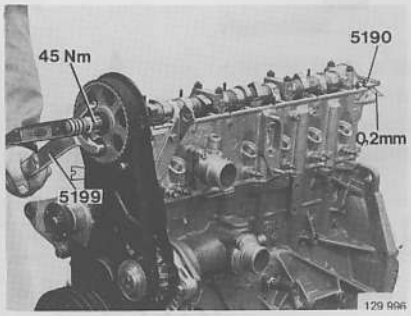

5199

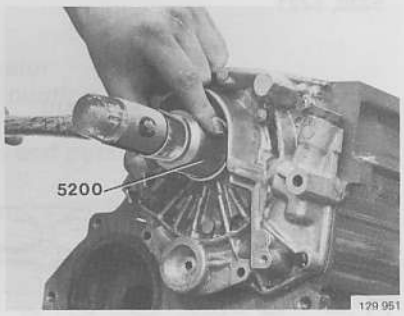

5200

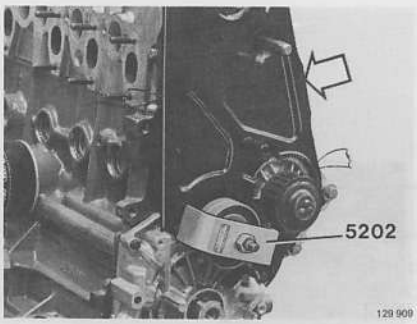

5202

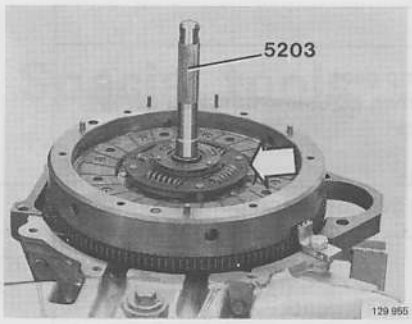

5203

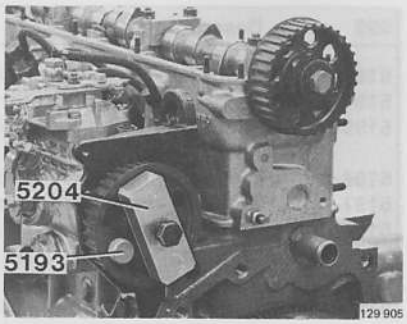

5204

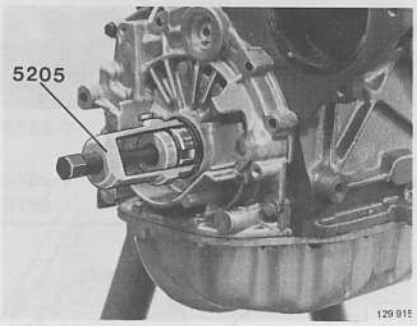

5205

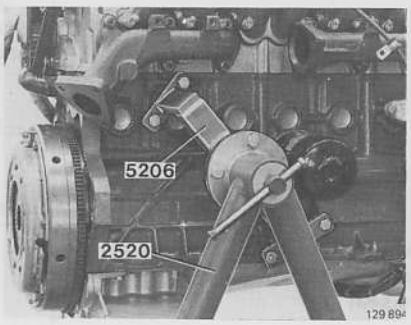

5206

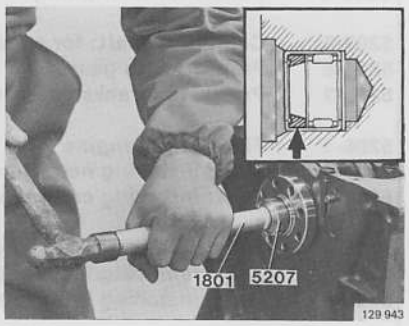

5207

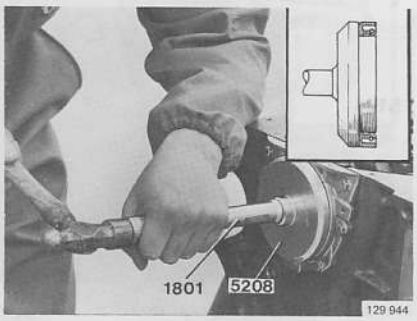

5208

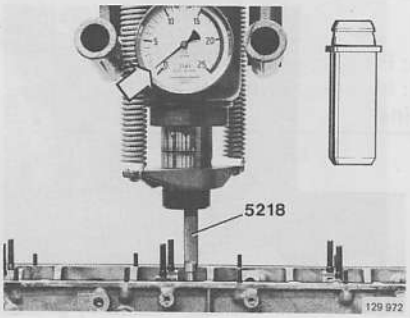

5218

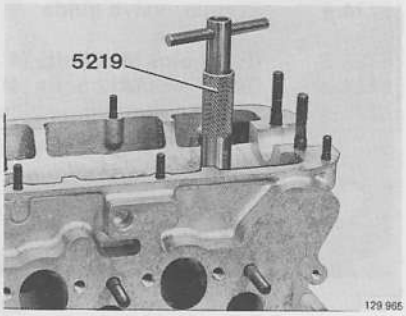

5219

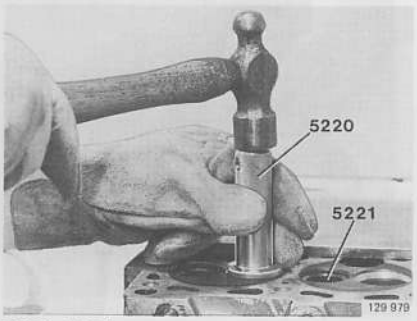

5220, 5221

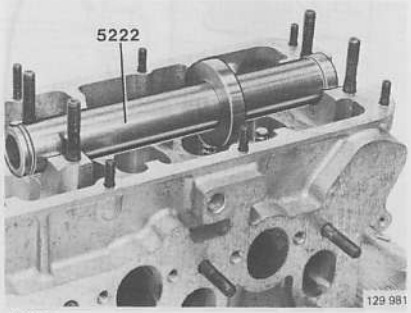

5222

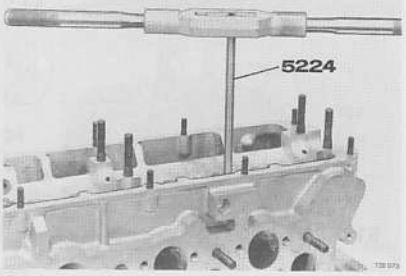

5224

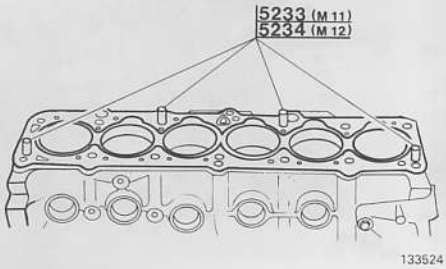

5233, 5234

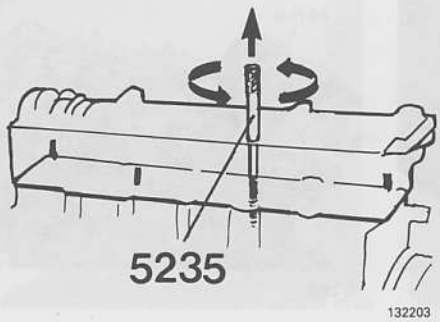

5235

Reconditioning engine

Special tools: 1801, 2520, 2903, 4090, 5017, 5112, 5187, 5188, 5190, 5192, 5193, 5194, 5195, 5196, 5197, 5198, 5199, 5200, 5202, 5203, 5204, 5205, 5206, 5207, 5208, 5218, 5219, 5220, 5221, 5222, 5224, 5233 (5234), 5235

A. Removing parts from engine block

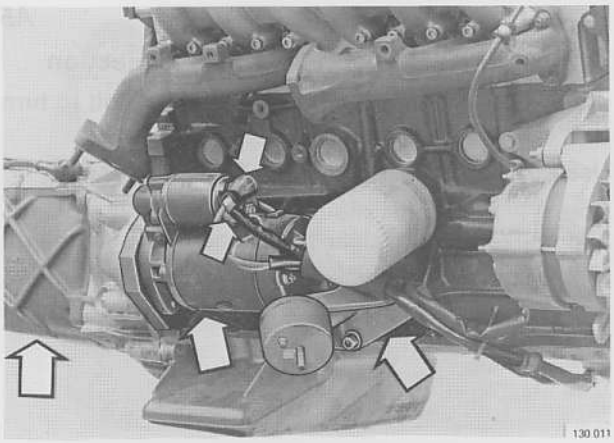

A1

Remove:

- wires from starter motor
- starter motor
- right engine mount
- transmission.

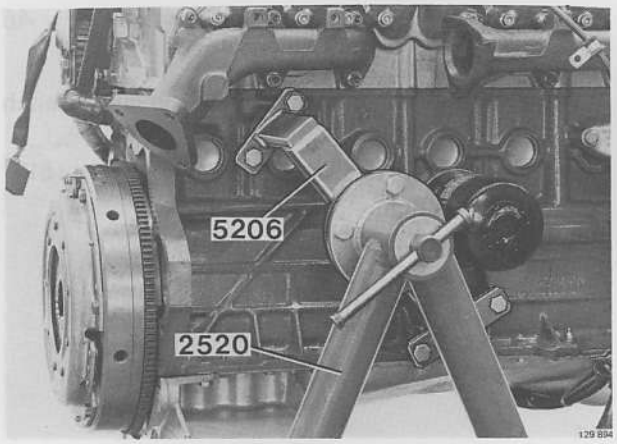

A2

Mount engine in stand 2520 with fixture 5206

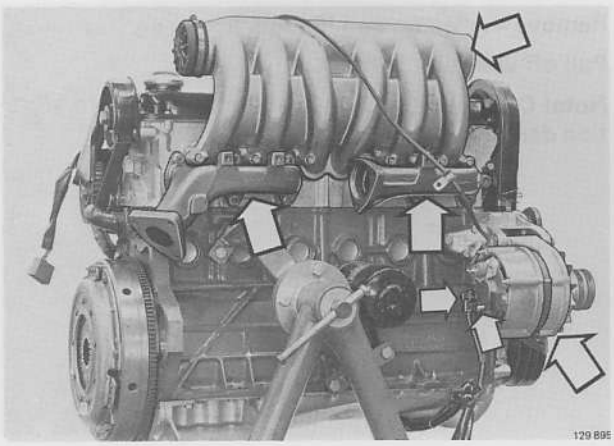

A3

Remove:

- wires from alternator
- alternator with mounting bracket arm
- intake manifold (6 mm Allen) and gasket
- exhaust manifold and gaskets.

A4

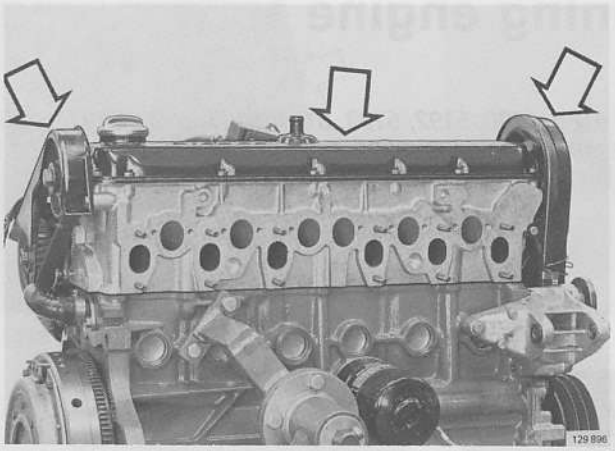

Remove:

- valve cover and gaskets
- timing gear covers (front + rear).

A5

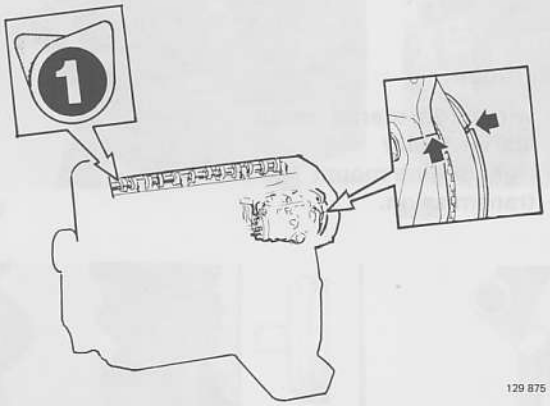

Turn engine until cyl. 1 is at TDC – injection

Always use the vibration damper center bolt to turn the engine.

Use a 27 mm socket.

Both cylinder 1 cams should point diagonally upwards and mark on pump gear should be opposite line on mounting bracket.

A6

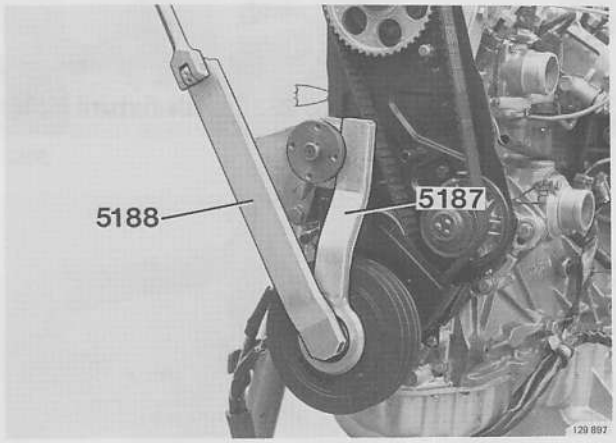

Remove vibration damper

Use **5187** to prevent pulley from rotating, and wrench **5188** to unscrew bolt.

It may be necessary to turn engine slightly so that **5187** rests on fan bearing.

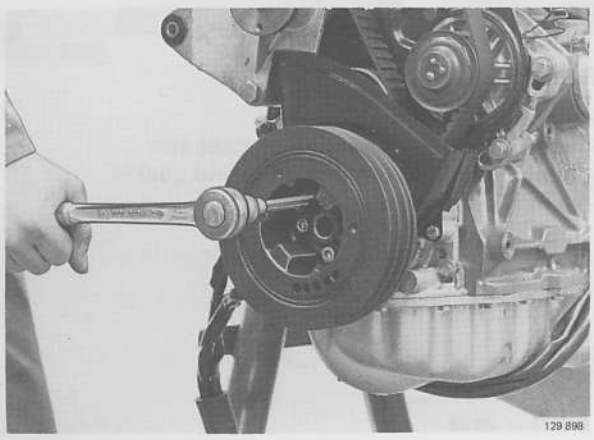

Remove 4 Allen screws (6 mm).

Pull off vibration damper.

Note! Crankshaft gear may sometimes stick to vibration damper.

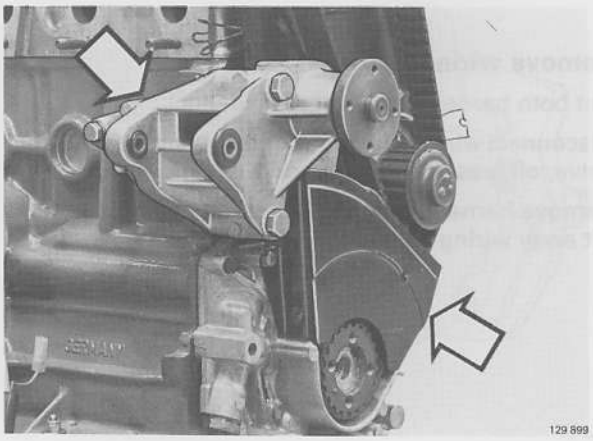

A7

Remove:

- lower timing gear cover
- fan/alternator mounting bracket.

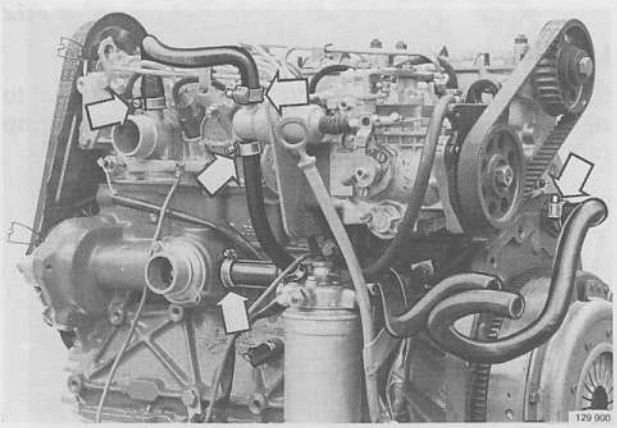

A8

Disconnect coolant hoses

Disconnect hoses from cold start device and heater.

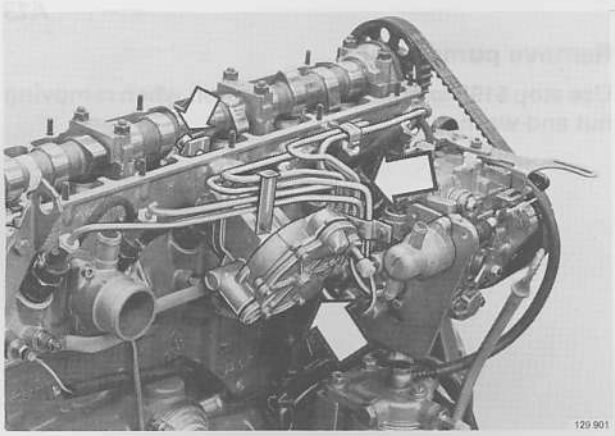

A9

Remove vacuum pump with plunger and fuel delivery pipes

Clean all connections thoroughly before disconnecting.

Block off all ports and connections to prevent dirt entering fuel system.

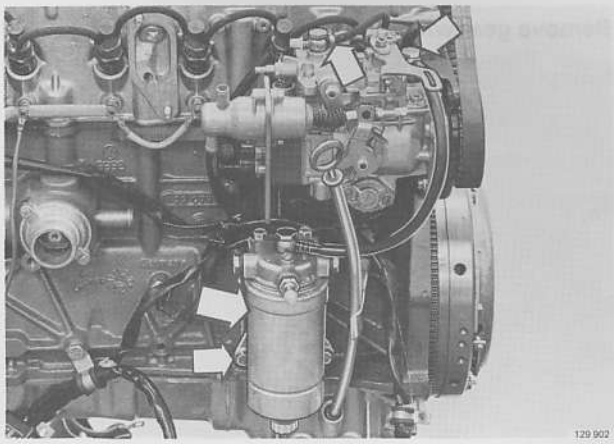

A10

Remove:

- return and supply fuel lines from injection pump. Plug ends to prevent dirt ingress.
- fuel filter with base
- mounting bracket for fuel filter.

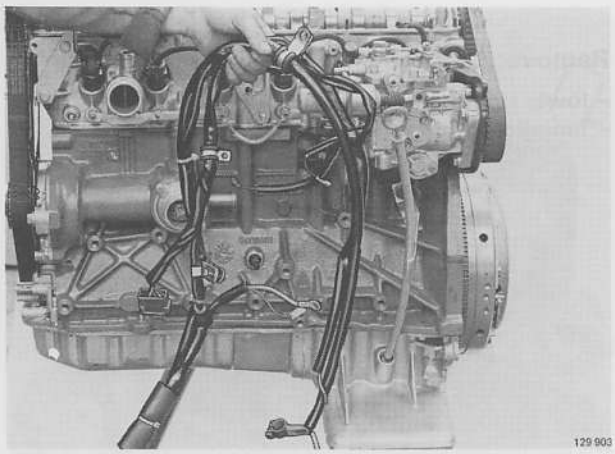

A11

Remove wiring harness

Cut both harness straps at rear of block.

Disconnect wires from temperature senders (2×), fuel valve, oil pressure sender and No. 2 glow plug.

Remove harness clamps (2×) at bottom of block and lift away wiring harness.

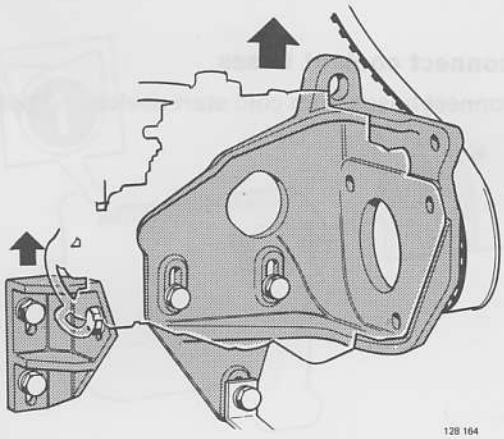

A12

Lift off pump belt

Slacken mounting bolts for injection pump bracket to release belt tension. Tighten one bolt so that pump remains in upper position. Lift off belt.

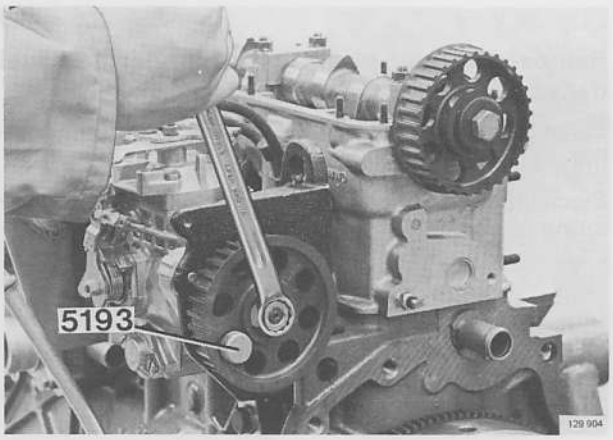

A13

Remove pump gear

Use stop **5193** to hold gear in position when removing nut and washer.

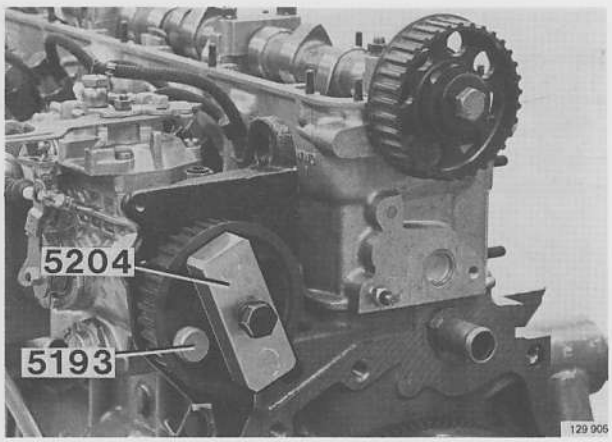

Remove gear with puller **5204**.

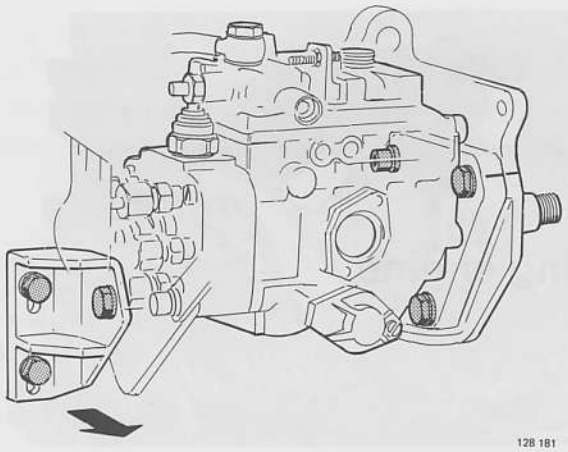

A14

Remove injection pump

Remove front mounting bracket for pump.

Detach pump from rear mounting bracket. Use a long 6 mm Allen key to remove inner bolt.

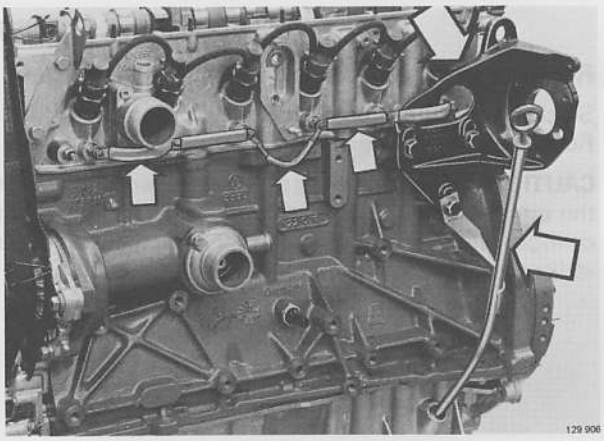

A15

Remove:

- copper connecting strips from glow plugs
- oil dipstick with tube
- rear pump mounting bracket.

B. Disassembling engine

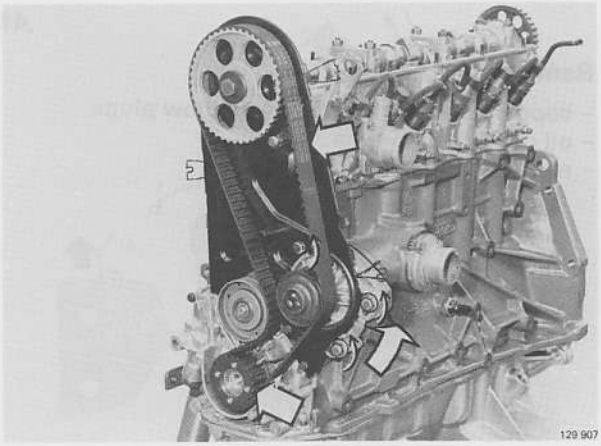

TIMING GEARS

B1

Remove timing gear belt and crankshaft gear

Slacken cooling pump mounting bolts and belt. Remove belt and crankshaft gear.

CAUTION! Once the timing gear belt is removed neither the crankshaft nor camshaft may be turned before the cylinder head is removed, otherwise the valves can strike the pistons and cause serious engine damage.

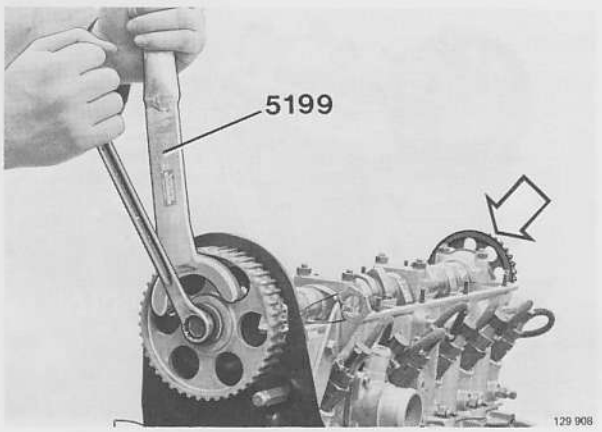

B2

Remove front and rear camshaft sprockets

Hold the camshaft in position with wrench **5199.**

Tap the front gear to remove it from camshaft.

Note! Take care not to rotate the camshaft.

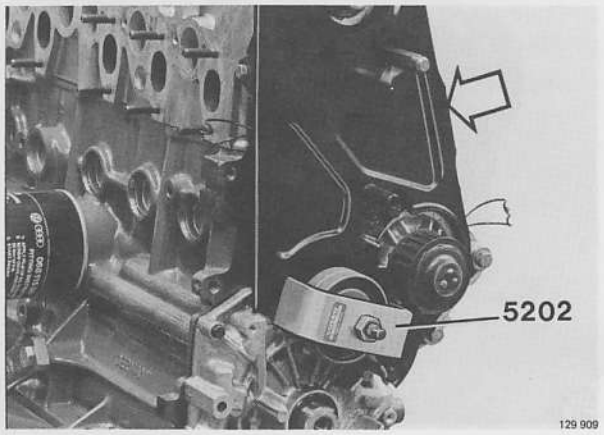

B3

Remove idler pulley and plate

Unscrew and remove center bolt.

Withdraw pulley using puller **5202.**

Remove cover plate.

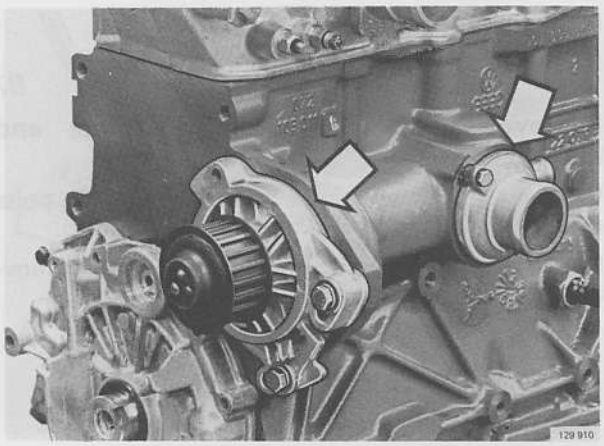

B4

Remove coolant pump, thermostat housing and thermostat

Place a drip pan beneath engine and tilt engine forward to drain coolant.

CYLINDER HEAD

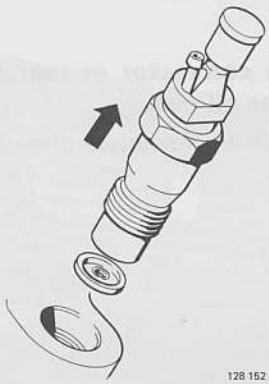

B5

Remove injectors

Remove dirt around injectors.

Disconnect fuel lines.

Remove injectors, (27 mm socket). Lift out heat shields from cylinder head.

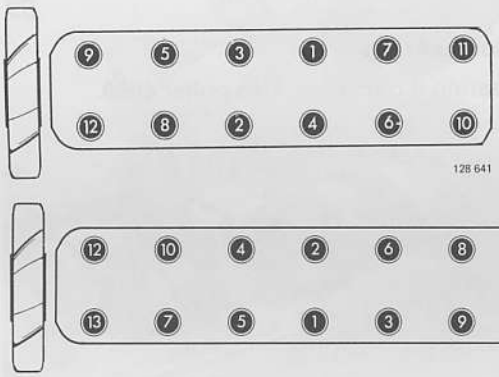

B6

Remove cylinder head

Important! Slacken bolts in reverse sequence to tightening. i.e. start at 12 (or 14) and finish at 1.

Illustration shows **tightening** sequence. Bolts must be slackened in reverse sequence.

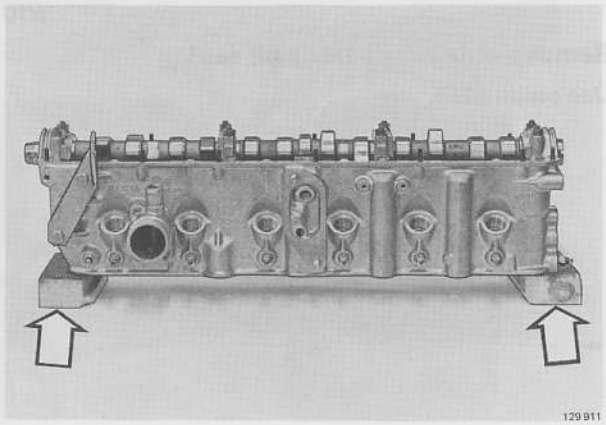

Lift away cylinder head, checking that valves do not contact cylinder walls.

Place cylinder head on wooden blocks so that it does not rest on valves. Remove gasket.

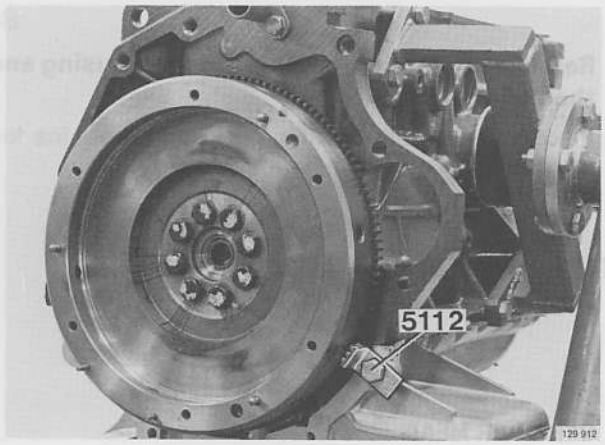

FLYWHEEL, CRANKSHAFT OIL SEALS

B7

Remove pressure plate, driven plate and flywheel

Unscrew clutch pressure plate mounting bolts crosswise a few turns at a time to prevent warp.

Use locking sector **5112** to prevent flywheel from moving.

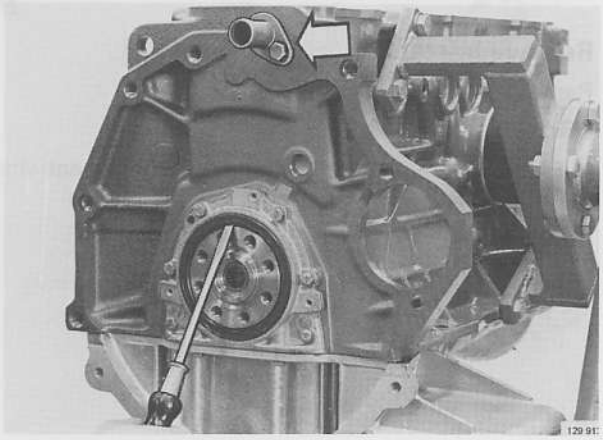

B8

Remove hose connector at rear of block and crankshaft rear oil seal

Pry out seal with a screwdriver placed between seal and crankshaft.

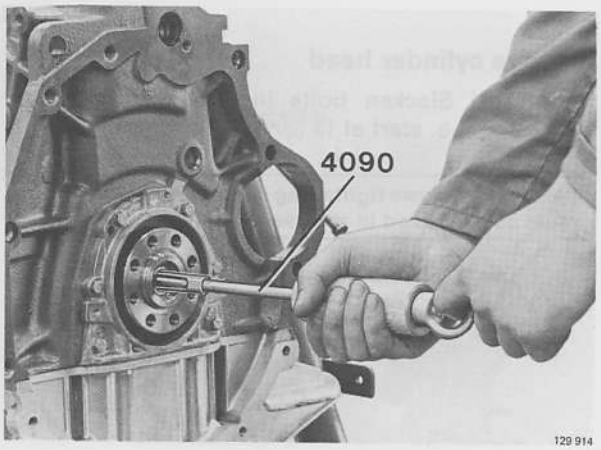

B9

Check pilot bearing

Replace bearing if damaged. Use puller **4090.**

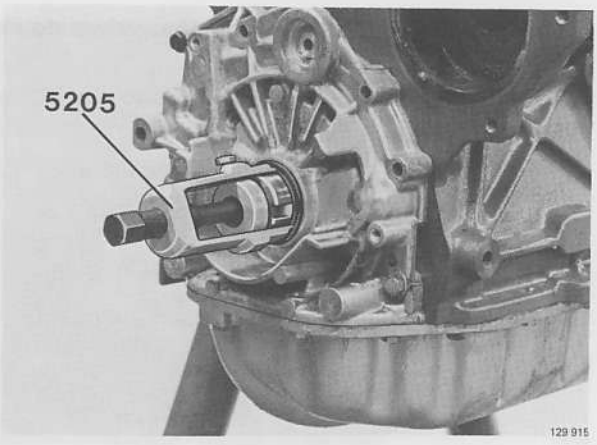

B10

Remove crankshaft front oil seal

Use puller **5205.**

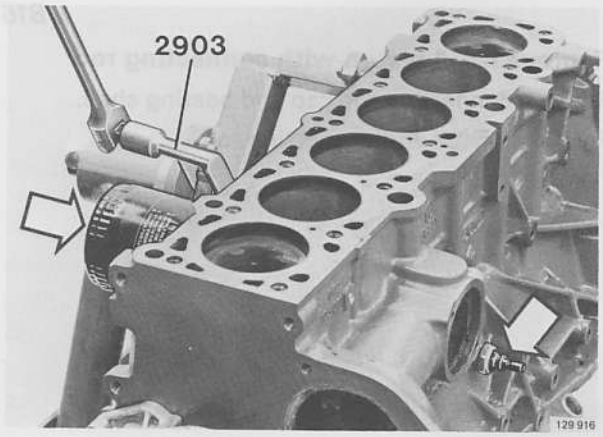

SUMP, OIL PUMP

B11

Remove oil pressure sender and filter

Use strap wrench **2903** to remove oil filter.

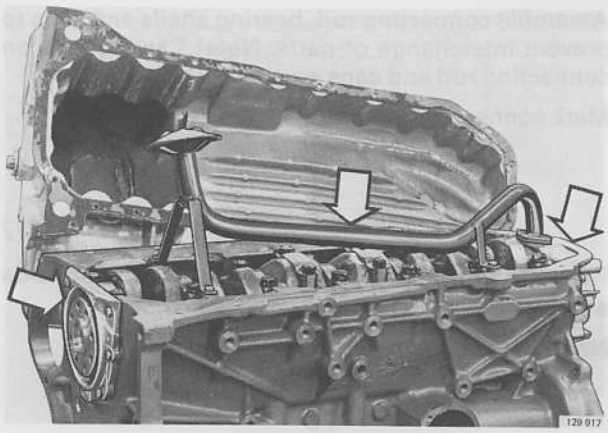

B12

Remove:

- sump
- oil strainer
- oil pump
- rear sealing flange.

PISTONS, CONNECTING RODS

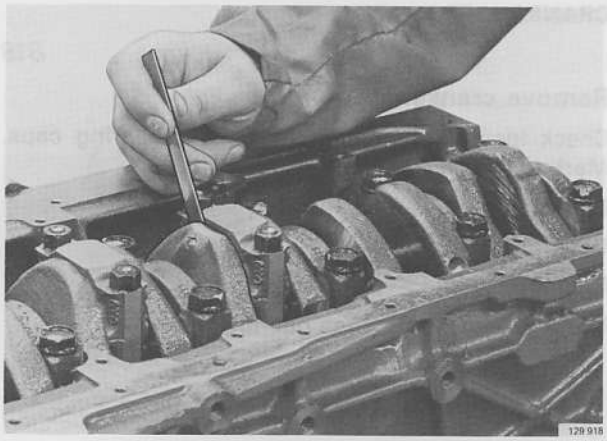

B13

Check connecting rod side clearance

Use a feeler gauge.

Clearance = max **0.4 mm** (0.016 in).

If clearance is too large, connecting rods must be replaced. Note that connecting rods must be replaced in sets.

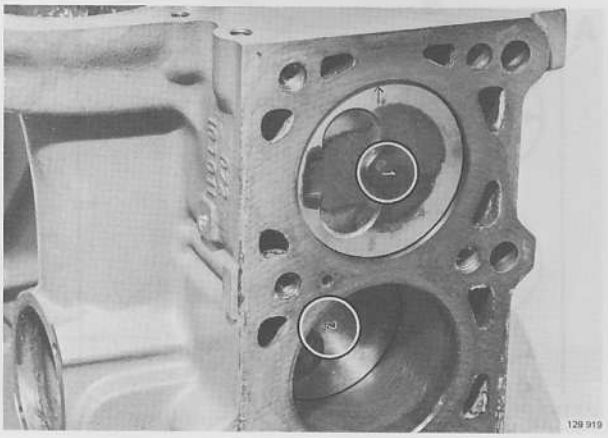

B14

Mark pistons

B15

Remove ridge at top edge of cylinder bore

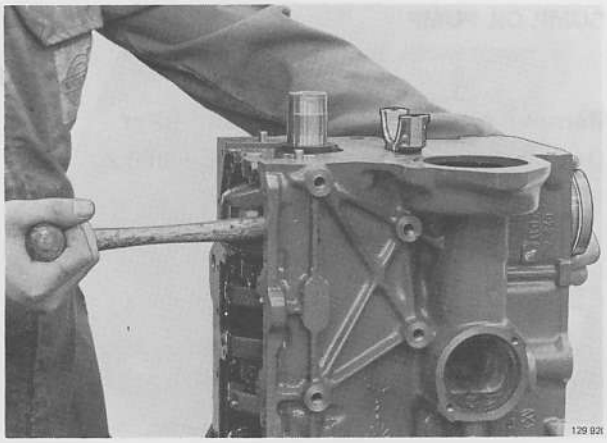

B16

Remove No. 1 piston with connecting rod

Remove connecting rod cap and bearing shell.

Push out piston and connecting rod.

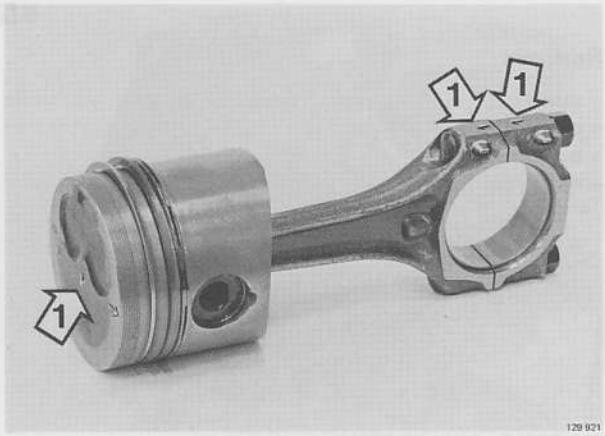

Assemble connecting rod, bearing shells and caps to prevent interchange of parts. **Note!** Casting lugs on connecting rod and caps must face the same way.

Mark connecting rod-cap.

B17

Remove remaining pistons and connecting rods as above

Note! Do not interchange bearing shells.

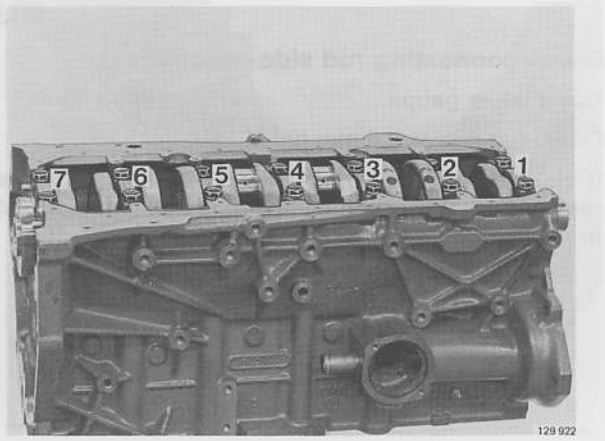

CRANKSHAFT

B18

Remove crankshaft

Check identification marks on main bearing caps. Mark as necessary.

Remove main bearing caps and shells.

Lift away crankshaft.

Remove bearing shells from cylinder block.

Note! Do not interchange bearing shells.

C. Cleaning, checking engine

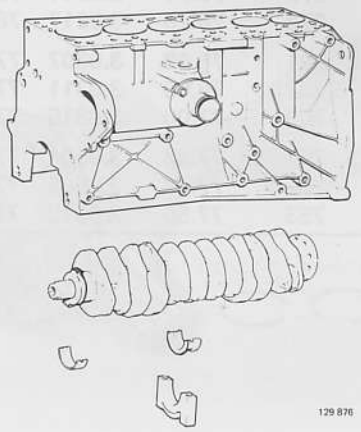

C1

Clean

- cylinder block (pieces of gasket, mating surfaces, bearing seats, oilways etc). Polish sealing surface for coolant pump O-ring.
- bores for cylinder head bolts, and bolts
- polish cylinder bores to remove scratch marks etc
- crankshaft-blow-out oilways
- main bearing caps and bearing shells

Check all parts for damage and wear.

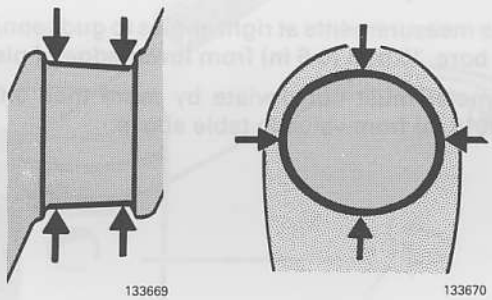

taper out-of-round

C2

Measure crankshaft

Use a micrometer to measure out-of-round and taper of bearing journals. Measure at several points.

Max out-of-round = **0.003 mm** (0.0001 in)
Max taper = **0.005 mm** (0.0002 in).

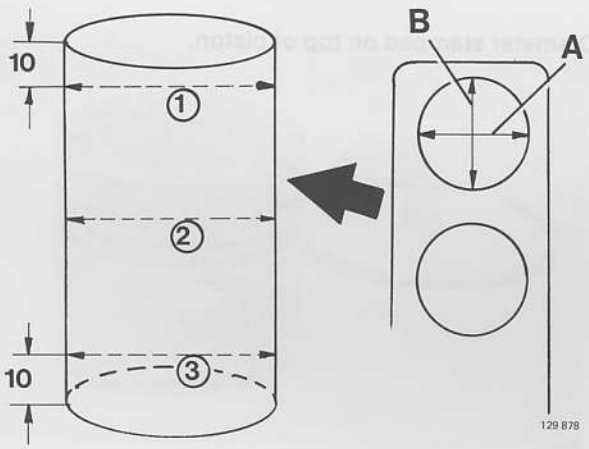

C3

Measure cylinder bore

Use a dial bore indicator (50–100 mm = 1.95–3.95 in).

Measure diameter A (crosswise) and B (lengthwise) at points "1", "2" and "3".

Bore must not deviate by more than **0.04 mm** (0.0016 in) at any two points.

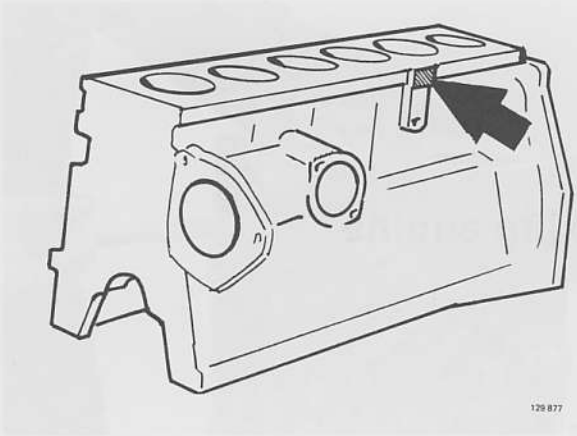

Cylinder bore is stamped on cylinder block (last 3 figures = honing group).

If cylinders are rebored, new bore must be stamped on side of block.

	Marking (honing-group)	Piston Diameter mm	Piston Diameter in	Bore Diameter mm	Bore Diameter in
Standard	651	76.48	3.0110	76.51	3.0122
	652	76.49	3.0114	76.52	3.0126
	653	76.50	3.0118	76.53	3.0130
Oversize 1	676	76.73	3.0209	76.76	3.0220
	677	76.74	3.0211	76.77	3.0224
	673	76.75	3.0217	76.78	3.0228
Oversize 2	701	76.98	3.0307	77.01	3.0319
	702	76.99	3.0311	77.02	3.0323
	703	77.00	3.0315	77.03	3.0327
Oversize 3	751	77.48	3.0504	77.51	3.0516
	752	77.49	3.0508	77.52	3.0520
	753	77.50	3.0512	77.53	3.0524

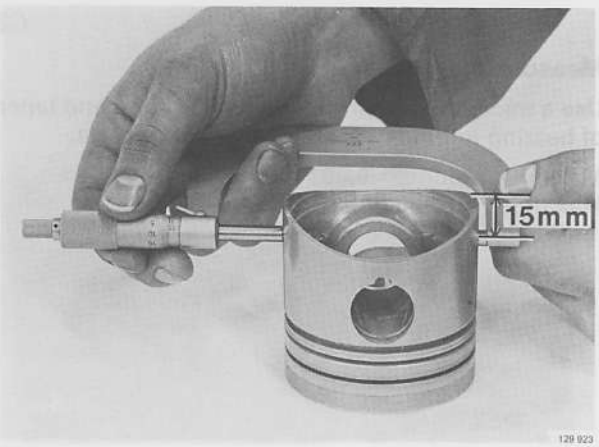

C4

Measure piston diameter

Take measurements at right angles to gudgeon/piston pin bore, 15 mm (0.6 in) from lower edge of piston.

Diameter must not deviate by more than **0.04 mm** (0.0016 in) from value in table above.

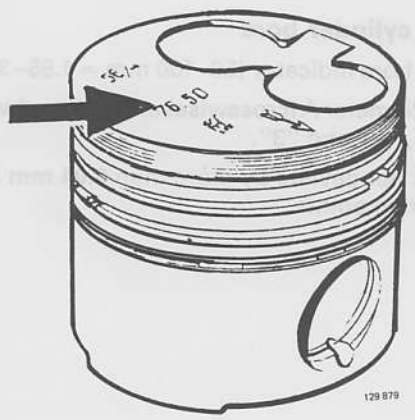

Diameter stamped on top of piston.

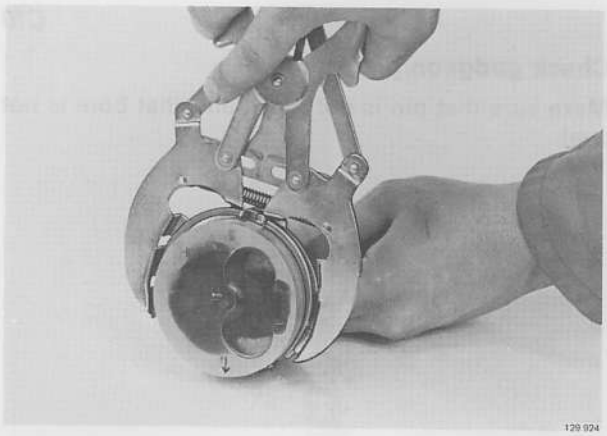

C5

Remove piston rings from piston

Use piston ring pliers.

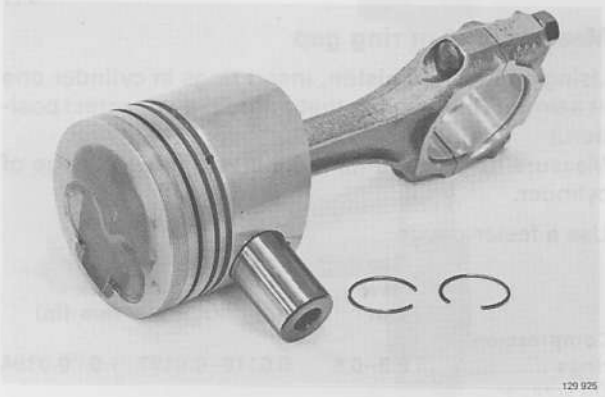

C6

Disassemble connecting rods – pistons

Remove circlips from gudgeon/piston pins with a small screwdriver. Push out pins with a suitable drift. If difficult to remove, heat pistons to approx. 60°C (140°F).

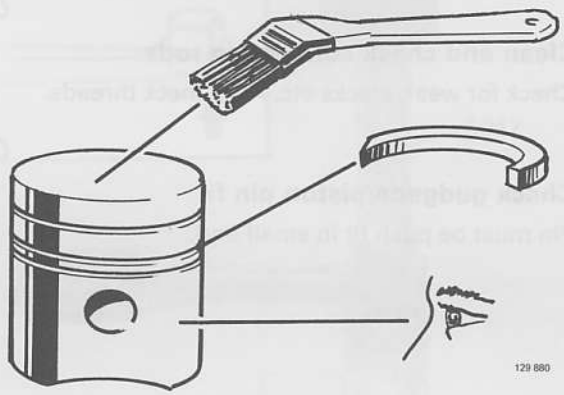

C7

Clean pistons

Remove carbon deposits. Use a groove cleaner or part of a ground piston ring to clean grooves.

C8

Check pistons

Check for cracks, wear etc.

Pistons with rounded top edges must not be reused. (Since this is caused by defective injectors, the injectors should be checked/reconditioned as well.)

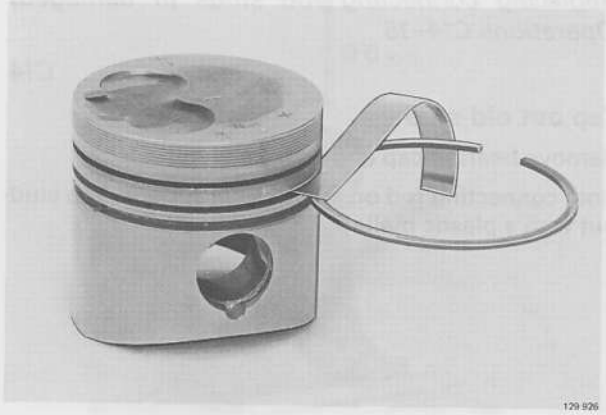

C9

Measure piston ring side clearance

Use a feeler gauge.

	Side clearance mm (in) New mm	(in)	Max mm	(in)
Upper compression ring	0.06–0.09	(0.0024–0.0035)	0.2	(0.0079)
Lower compression ring	0.05–0.08	(0.0020–0.0031)	0.2	(0.0079)
Oil scraper ring	0.03–-0.06	(0.0012–0.0024)	0.15	(0.0060)

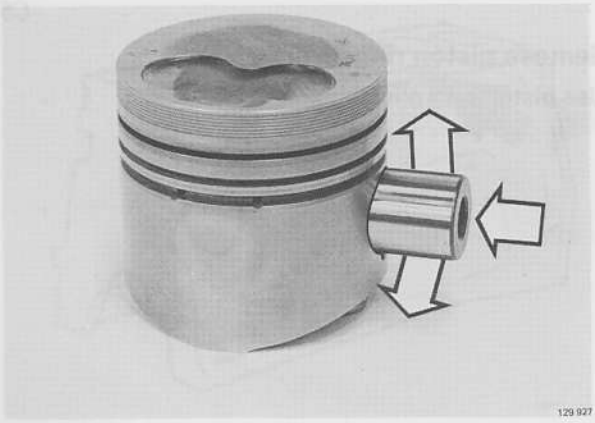

C10

Check gudgeon/piston pin fit

Make sure that pin is not loose and that bore is not oval.

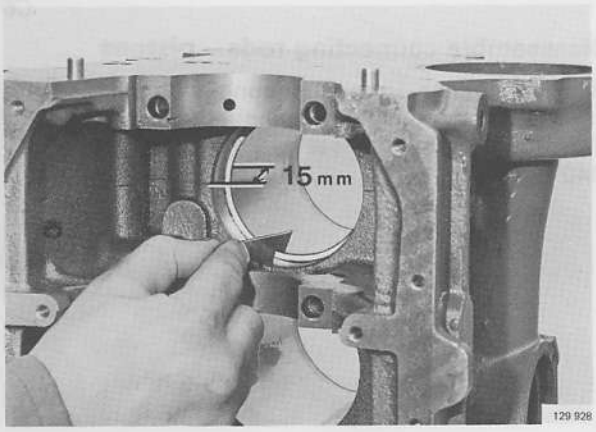

C11

Measure piston ring gap

Using an inverted piston, insert rings in cylinder one at a time. (This ensures that rings take up correct position.)
Measure ring gap 15 mm (0.6 in) from lower edge of cylinder.

Use a feeler gauge.

	Gap New mm	(in)	Max mm	(in)
Compression rings	0.3–0.5	0.0118–0.0197	1.0	0.0394
Oil scraper ring	0.25–0.40	0.0098–0.0157	1.0	0.0394

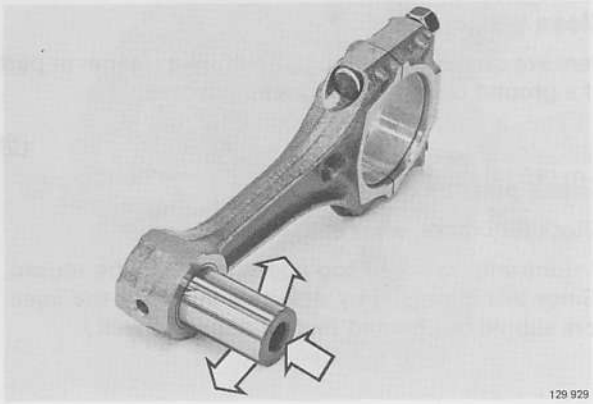

C12

Clean and check connecting rods

Check for wear, cracks etc. Also check threads.

C13

Check gudgeon/piston pin fit

Pin must be push fit in small end.

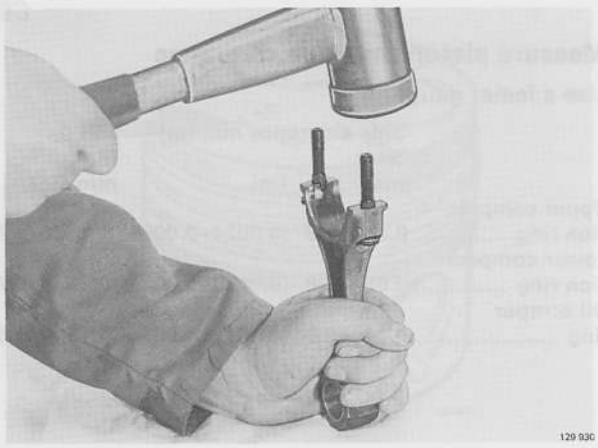

Replacing connecting rod studs (if damaged) Operations C14–15

C14

Tap out old stud

Remove bearing cap and bearing shells.

Hold connecting rod on a hard level surface. Tap stud out with a plastic mallet.

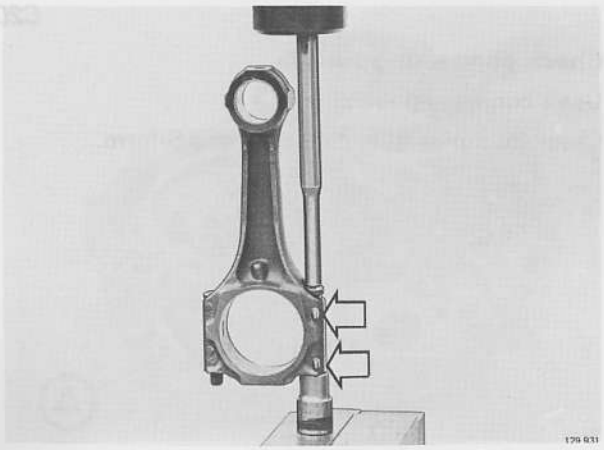

C15

Fit new stud

Place new stud in connecting rod. Tap bolt into position with a plastic mallet.

Install cap. **Note!** Identification marks.

Place a socket (e.g. 12 mm) beneath cap and press in stud until it bottoms.

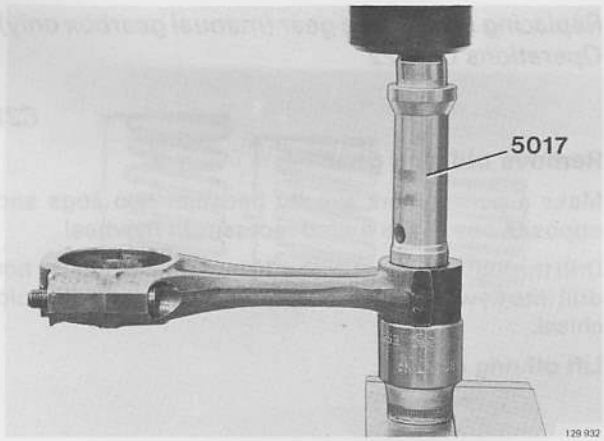

Replacing connecting rod bushings
Operations C16–19

C16

Press out bushing

Use drift **5017** (narrow end) and a suitable socket, placed beneath connecting rod.

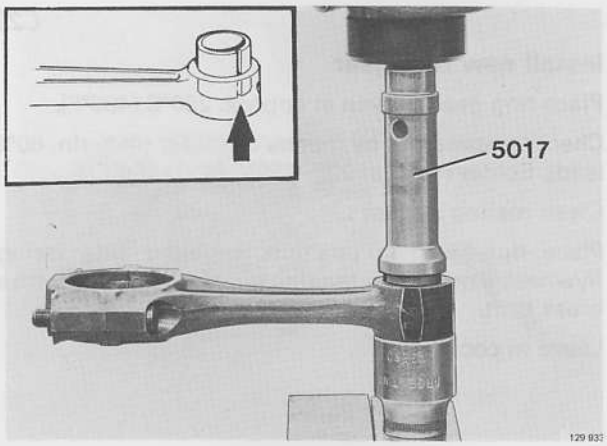

C17

Press in new bushing

Use drift **5017** (wide end) and a suitable socket, placed beneath connecting rod.

Bushing should be flush with connecting rod.

Note! To ensure correct lubrication, install bushing with split diagonally upwards but not blocking oil channel.

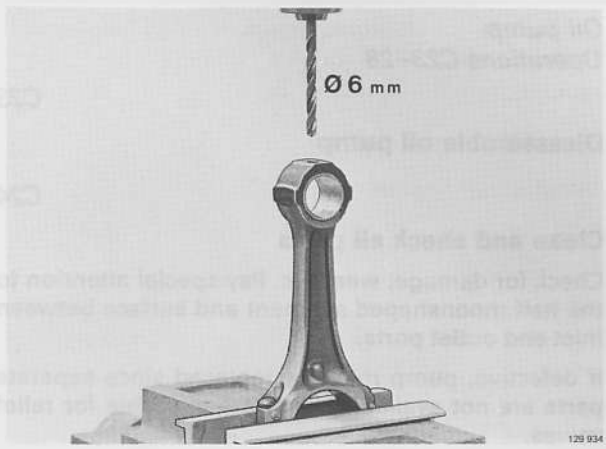

C18

Drill lubricating hole in bushing

Mount connecting rod in vice protected by soft jaws to prevent damage. Use a 6 mm (0.24 in) drill bit.

C19

Ream bushing

Gudgeon/piston pin must have a light push fit in connecting rod.

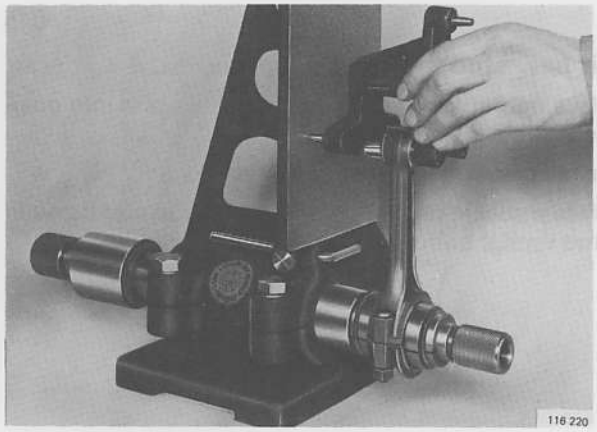

C20

Check connecting rods

Use a connecting rod aligner.

Check for out-of-true, distortion and S-form.

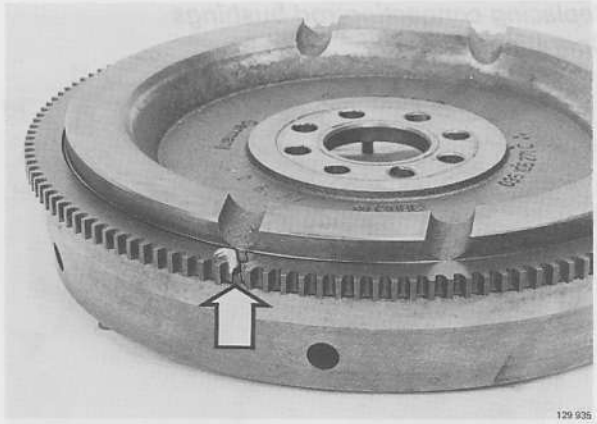

Replacing starter ring gear (manual gearbox only)
Operations C21–22

C21

Remove old ring gear

Make a punch mark exactly between two cogs and opposite one of the milled recesses in flywheel.

Drill through ring gear with a 10 mm drill. **Note!** Do not drill into flywheel. If necessary split ring gear with cold chisel.

Lift off ring gear.

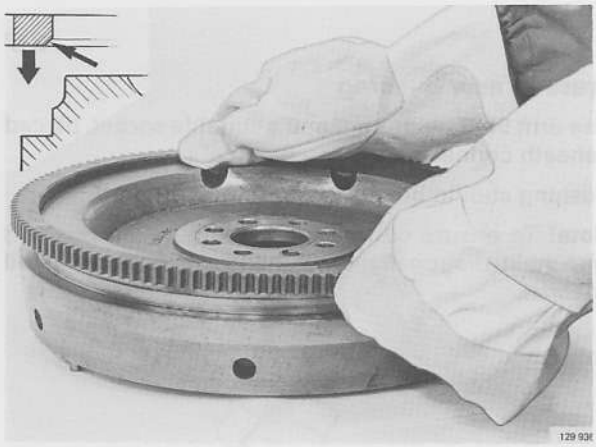

C22

Install new ring gear

Place ring gear in oven at approx. 250°C (480°F).

Check temperature by means of solder (40% tin, 60% lead). Solder melts at 220–230°C (430–450°F).

Clean mating surfaces.

Place ring gear in position, bevelled side facing flywheel. If necessary tap ring gear into position with a brass drift.

Leave to cool.

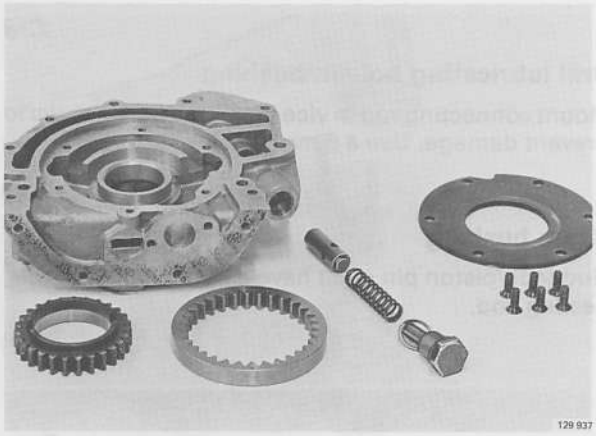

Oil pump
Operations C23–28

C23

Disassemble oil pump

C24

Clean and check all parts

Check for damage, wear etc. Pay special attention to the half moonshaped segment and surface between inlet and outlet ports.

If defective, pump must be replaced since separate parts are not available. Parts are available for relief valves.

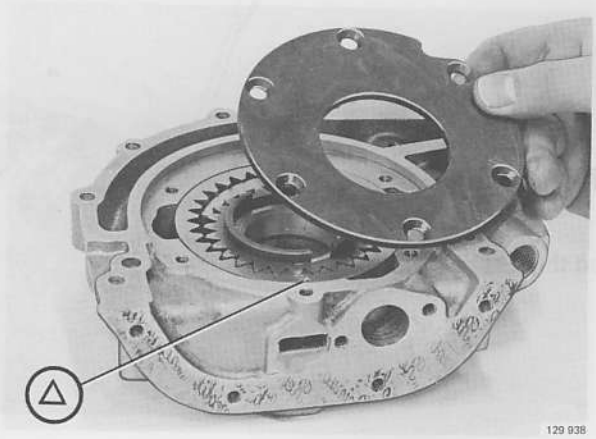

C25

Place pump gears in housing and check play/ backlash

Place large pump gear in housing with (△) up and then install small gear.

Check play/backlash. If too large, replace entire pump.

C26

Install cover

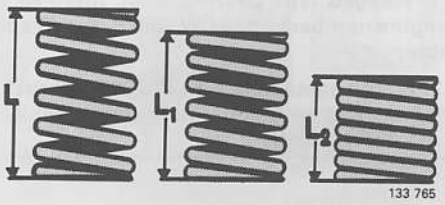

C27

Test relief valve spring

Load		Length	
N	lb	mm	in
0	0	49	1.930
175–195	39	22	0.866
approx. 200	45	19.8	0.780 (fully compressed)

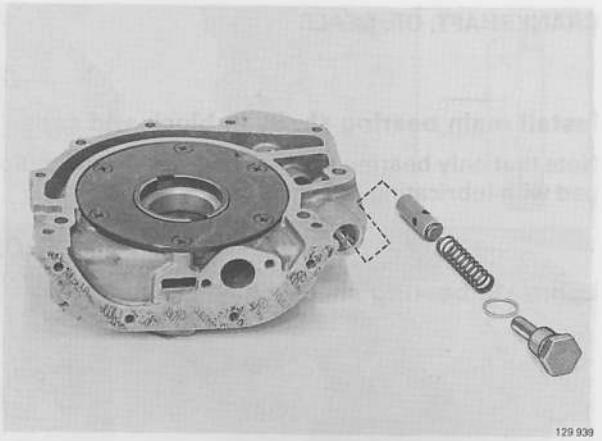

C28

Install relief valve

Check that plunger moves freely.

Install new copper washer.

Tightening torque 40 Nm (30 ft lbs).

D. Assembling engine

New gaskets, O-rings and oil seals should be used throughout when assembling the engine.

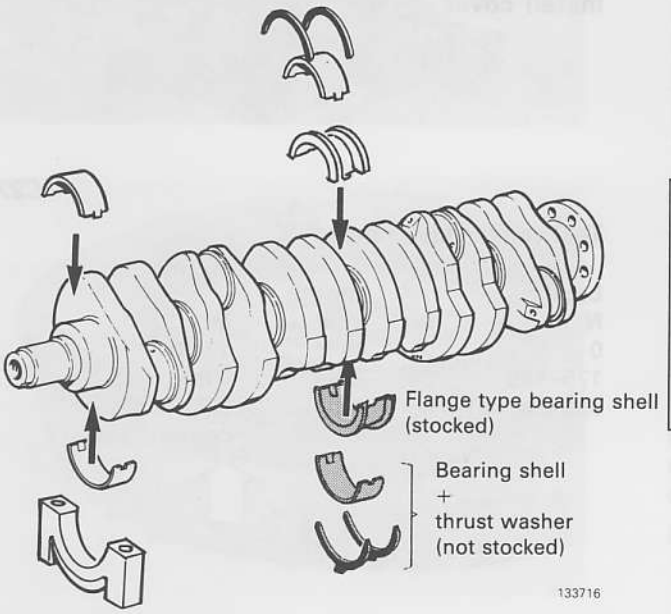

D 24: Modified crankshaft bearings

Two type of bearing shells are in use:

Type 1: **Flanged type bearing shell,** fitted to vehicles with engine numbers up to CW 70978. Type 1 spares are available.

Type 2: From engine number CW 70978: thrust washer halves are used with separate bearing shells. These parts are not stocked.

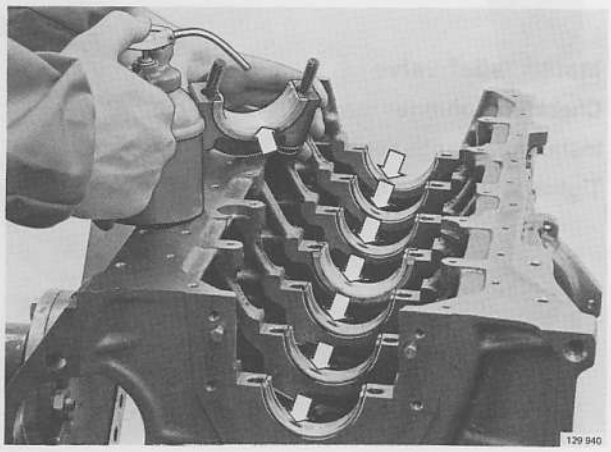

CRANKSHAFT, OIL SEALS

D1

Install main bearing shells in block and caps

Note that only bearing shells on block side are equipped with lubricating holes.

D2

Lubricate bearing shells

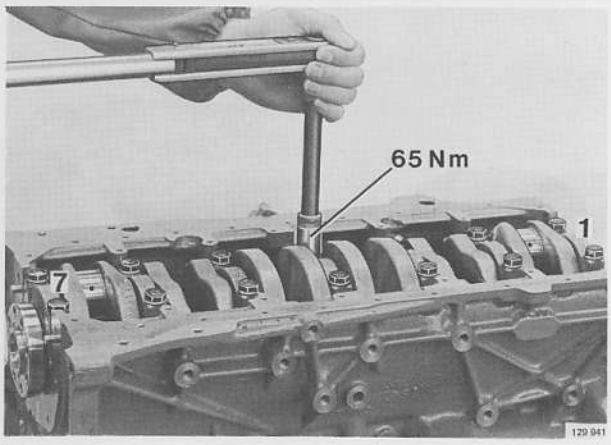

D3

Position crankshaft

Lubricate bearing seats.

D4

Install main bearing caps

Lubricate bolts.

Install No. 4 cap first.

Note! Identification numbers must face towards oil filter side. No. 1 cap must face vibration damper end and No. 7 cap the flywheel end.

Tighten each cap to **65 Nm** (47 ft lbs). Make sure that crankshaft can be rotated after each cap is installed.

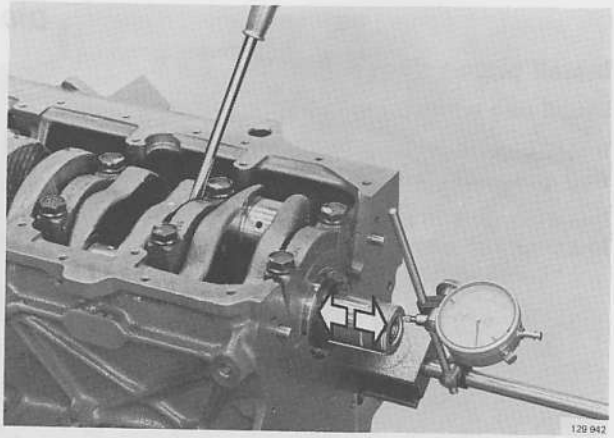

D5

Check crankshaft end float

Use a dial indicator to measure the clearance between both end positions of crankshaft.

End float

new ..... **0.07–0.18 mm** (0.0028–0.0071 in)

max ..... **0.25 mm** (0.0098 in)

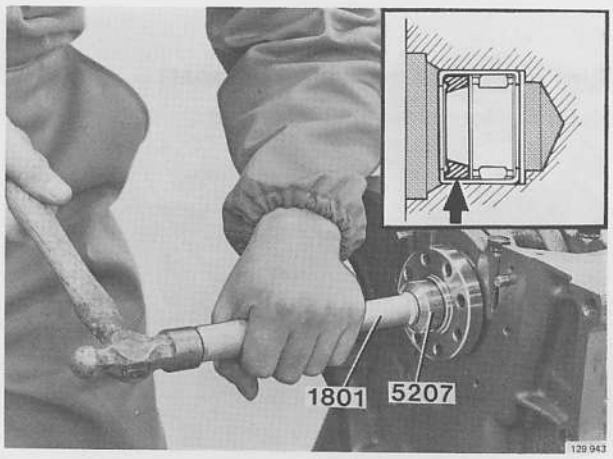

Manual transmission D6

Install new pilot bearing

Install bearing with oil seal and mark on outer race facing out.

Use standard handle **1801** and drift **5207** to tap in bearing until it abuts crankshaft.

Press in a small amount of grease (1.3–1.5 gram) in the space beyond the bearing.

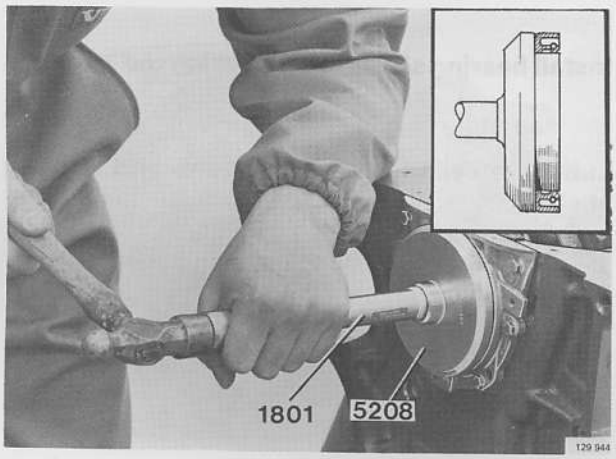

D7

Install rear sealing flange

Use a new seal.

(6 bolts M6 × 18)

D8

Install crankshaft rear oil seal

Assemble standard handle **1801** and drift **5208**.

Smear all mating surfaces with oil.

Place seal on drift and tap in until it abuts crankshaft.

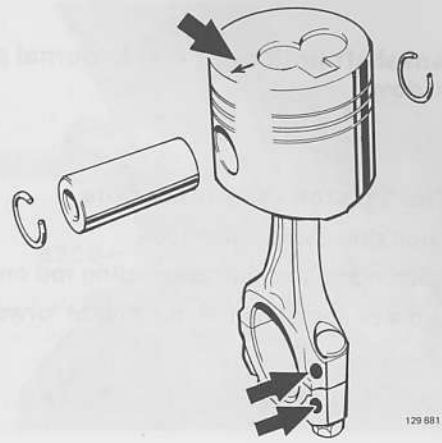

PISTONS, CONNECTING RODS

D9

Assemble pistons and connecting rods

Casting lugs on connecting rod and arrow on top of piston must face same direction.

Insert one snap ring and press in gudgeon/piston pin using a suitable drift. If this is difficult, heat piston to approx. 60°C (140°F). Install other snap ring.

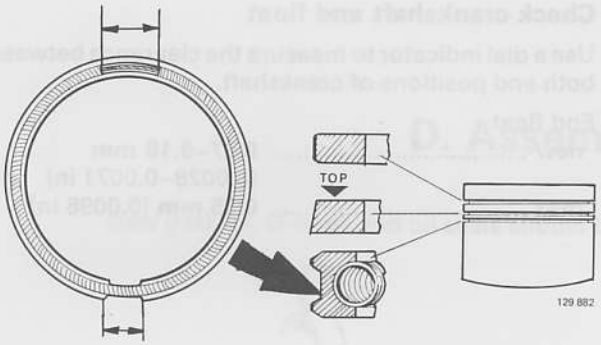

D10

Install piston rings

Install ring with spring in bottom groove.

Install oil scraper ring. **Note!** Make sure that gap in oil ring and spring are opposite each other, see fig.

Install lower compression ring, TOP facing up.
Install upper compression ring.

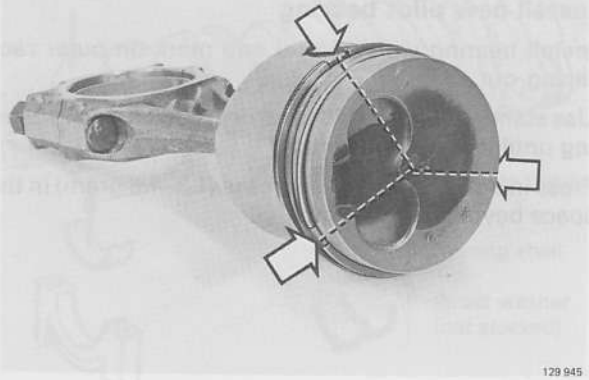

D11

Turn rings until gaps are 120° apart

Note! Do not rotate oil scraper ring.

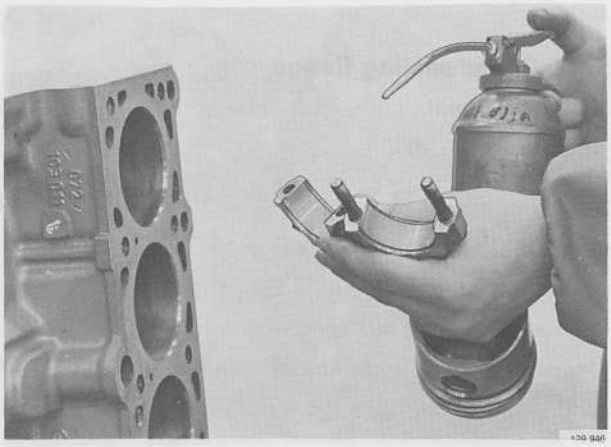

D12

Install bearing shells in connecting rod and caps

D13

Lubricate cylinder bores, pistons and bearing shells

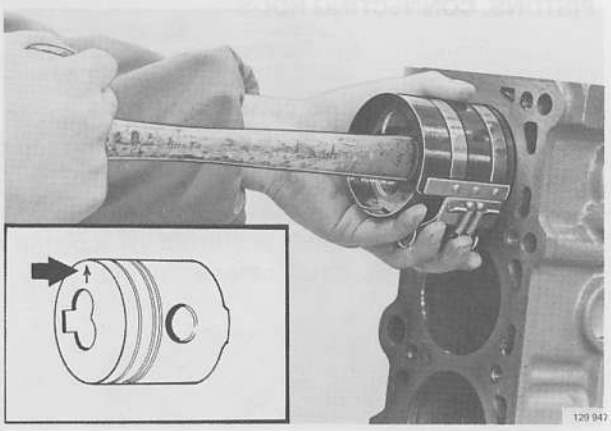

D14

Turn crankshaft until cyl. 1 crank journal points straight down

D15

Install No. 1 piston in cylinder bore

Use a piston ring compresser tool.

Push in piston and position connecting rod on crank.

Note! Arrow on top of piston must point forwards.

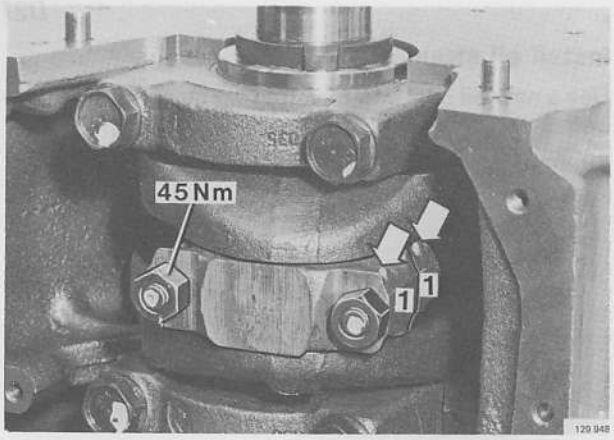

D16

Install connecting rod cap

Check identification marks. Casting lugs (arrowed) must face forwards. Install new nuts, lubricate contact surfaces.

Torque to **45 Nm** (32 ft lbs).

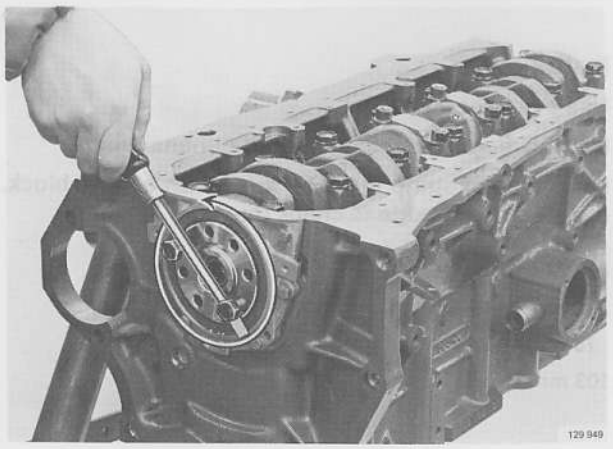

D17

Install remaining pistons

Follow operations D14–D16.

D18

Check that crankshaft can be rotated

Use two old flywheel bolts and a screwdriver as illustrated to rotate crankshaft.

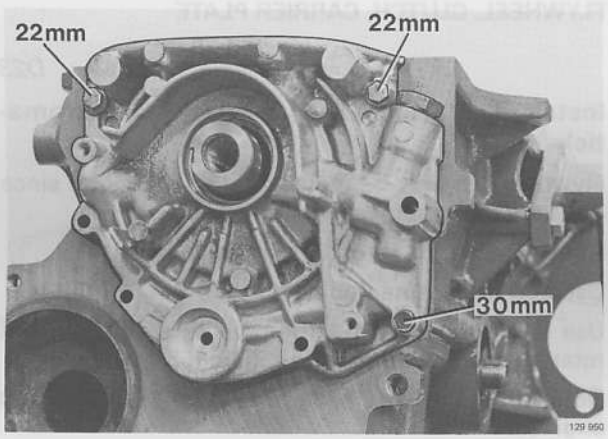

OIL PUMP, SUMP (PAN)

D19

Install oil pump

Install pump with new oil seal.

Align pump gear on crankshaft flange. Install three bolts (arrowed). Other bolts will be installed at a later stage.

Note! Oil pump bolts are of different lengths.

22 mm = 0.87 in

30 mm = 1.18 in

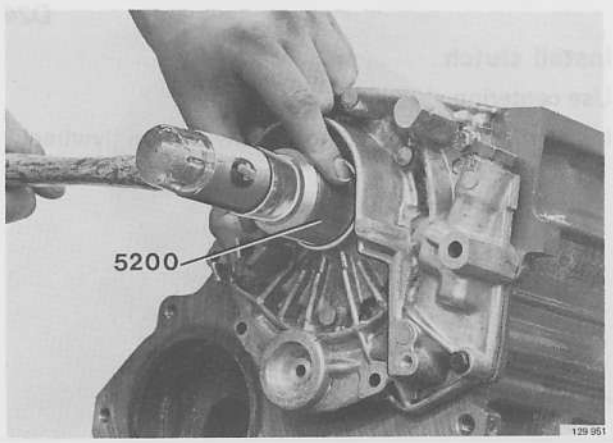

D20

Install crankshaft front oil seal

Pack space between sealing lips with grease.

Tap in oil seal with **5200** and a plastic mallet.

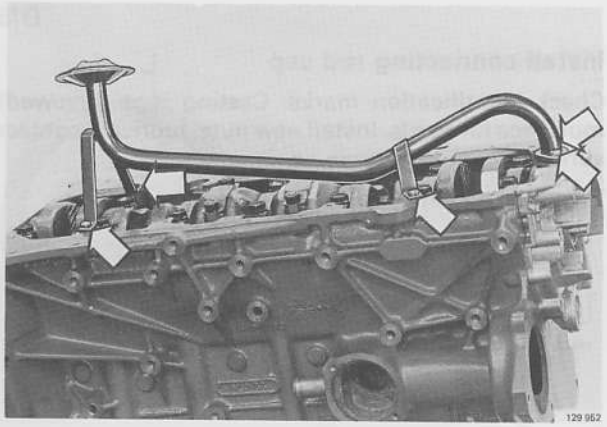

D21

Install oil strainer

Use a new oil seal and new locking strap for oil pump bolts.

Tightening torque 10 Nm (6.5 ft lbs).

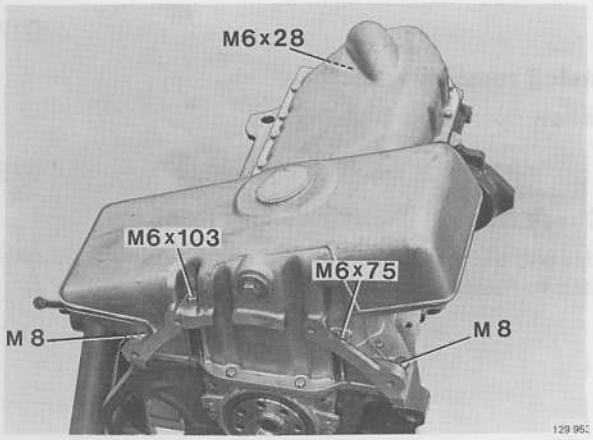

D22

Install sump

Use a new gasket.

Note! Different bolt lengths and dimensions.

Rear edge of sump must be flush with engine block. (Use a straight edge to check this.)

All other bolts = M6 × 18

28 mm = 1.10 in

75 mm = 2.95 in

103 mm = 4.05 in

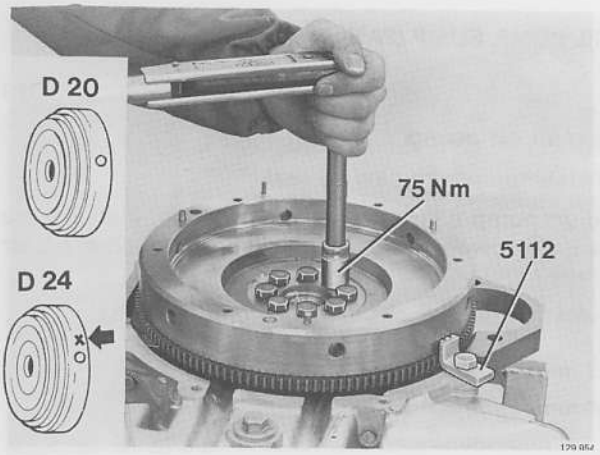

FLYWHEEL, CLUTCH, CARRIER PLATE

D23

Install flywheel (manual), carrier plate (automatic)

Flywheel can only be installed in one position since bolts are asymmetrically located.

Note! Support panel on automatic vehicles.

Use new bolts, smeared with sealer P/N 277 961-9.

Use locking sector **5112** to prevent crankshaft from rotating and torque bolts to **75 Nm** (55 ft lbs).

Note! Different types of flywheels for D 20 and D 24 engines.

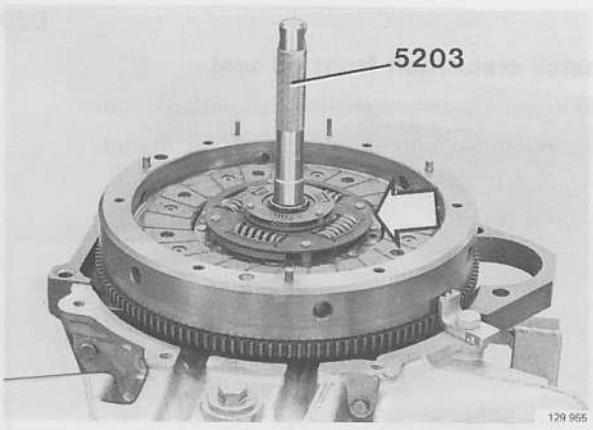

D24

Install clutch

Use centering shaft 5203.

Install disc with hub facing out, away from flywheel.

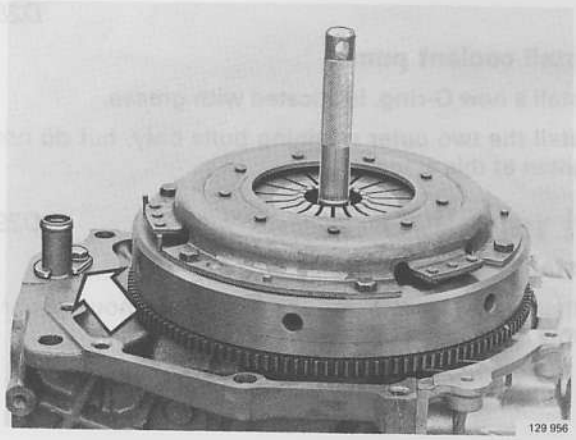

D25

Install pressure plate

Tighten bolts crosswise, a few turns at a time to avoid warp.

Remove locking sector 5112 and centering shaft **5203.**

MISCELLANEOUS

D26

Reconnect hoses at rear of engine block

Use new O-rings.

Automatic gearbox

Check installation measurement of carrier plate

(To be carried out after replacement of carrier plate) Installation measurement = 17.2–18.8 mm (0.667–0.740 in).

If carrier plate is installed incorrectly (i.e. installation measurement is wrong), distance to torque converter carrier will be too long. This may cause carrier plate to crack and possibly noise when driving.

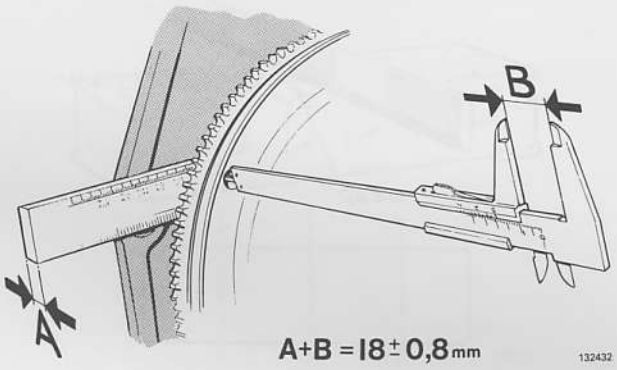

D27

To measure

Place a steel ruler between carrier plate and engine block. Ruler should rest against engine to gearbox mounting flange and should rest against both sides of flange. Turn crankshaft until one of holes in carrier plate coincides with steel ruler. Measure B with an outside caliper equipped for depth measurement.

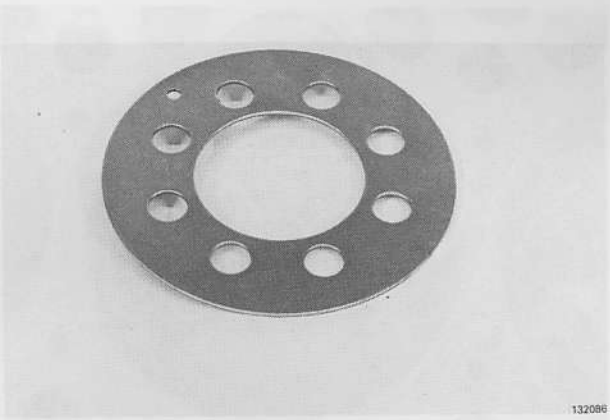

Measured value B plus thickness of steel ruler should = 17.2–18.8 mm (0.667–0.740 in). If distance is less than 17.2 mm = 0.677 in, place a spacer washer (P/N 1257377-0) between crankshaft and carrier plate.

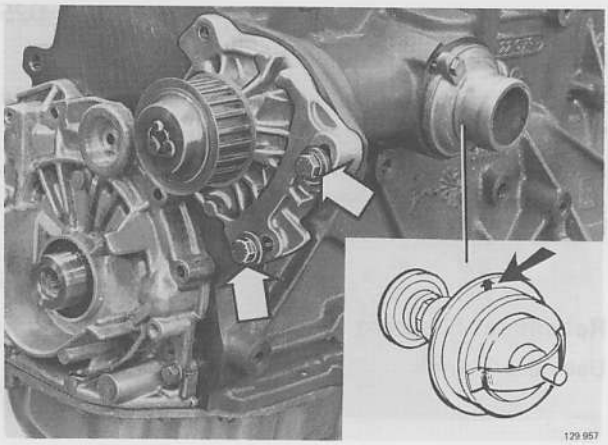

D28

Install coolant pump

Install a new O-ring, lubricated with grease.

Install the two outer retaining bolts only, but do not tighten at this stage.

D29

Install

- thermostat, new O-ring and thermostat housing. Arrow on thermostat must face up.

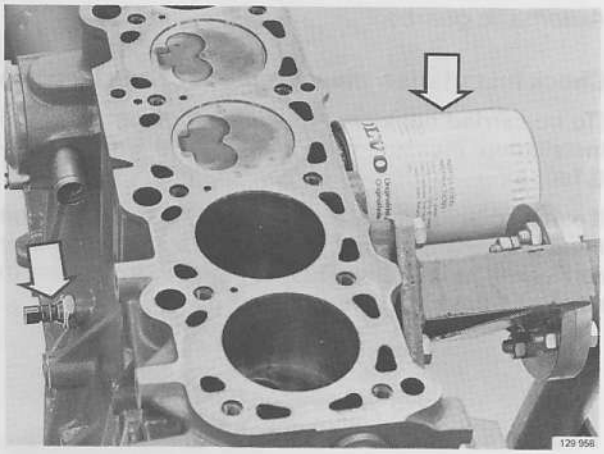

D30

Install

- oil pressure sender, use a new washer
- oil filter, see instructions on cartridge.

E. Cylinder head, disassembly

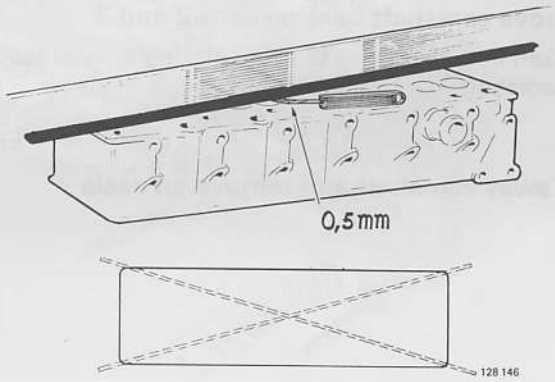

E1

Clean gasket surfaces on cylinder head and cylinder block.

E2

Check for damage and warp

Use a straight edge and feeler gauge.

Replace cylinder head if warp exceeds:

– lengthwise **0.5 mm** (0.02 in)

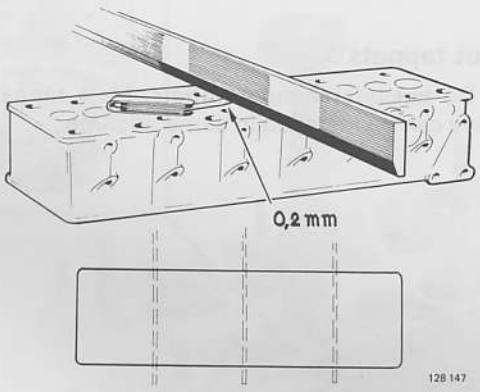

– crosswise **0.2 mm** (0.008 in)

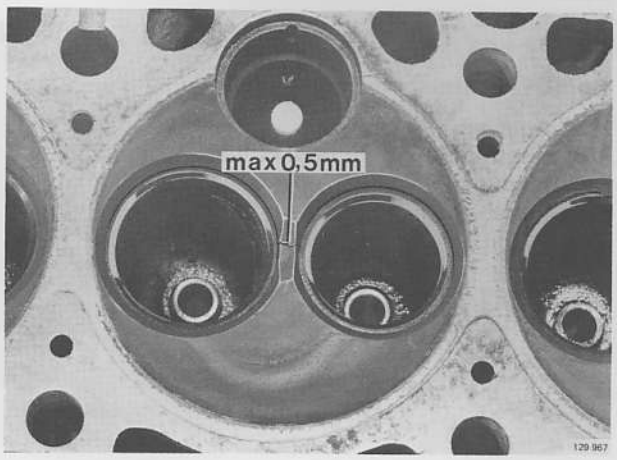

Note! Small cracks 0.5 mm (0.02 in) do not warrant replacement of cylinder head since they do not impair engine function.

For gasket replacement only see "Cylinder head installation" on page 55.

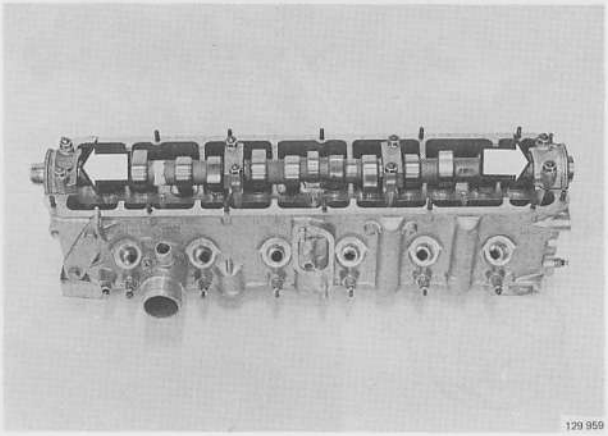

E3

Remove camshaft bearing caps 1 and 4

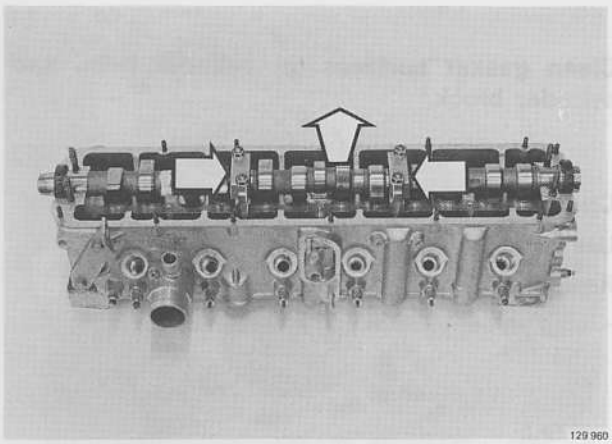

E4

Remove camshaft bearing caps 2 and 3

Slacken nuts crosswise to avoid placing uneven load on camshaft.

E5

Lift away camshaft and remove oil seals

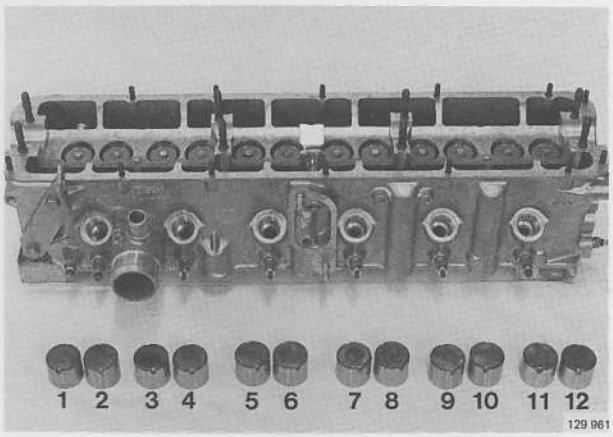

E6

Lift out tappets

Note! Do not interchange tappets. Mark tappets so that they can be installed in same position.

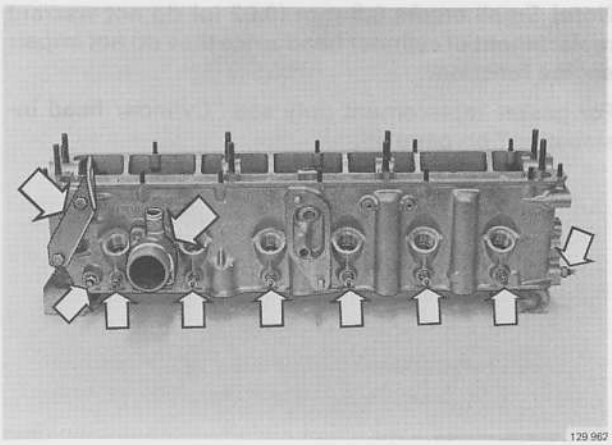

E7

Remove from cylinder head:

- lifting eyes
- connecting flange for coolant hose (Allen 5 mm)
- glow plugs
- temperature senders (2 X).

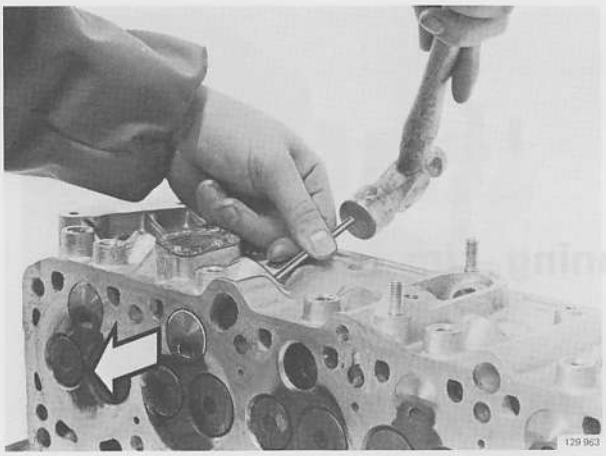

E8

Tap out swirl chambers

Use a long narrow punch (0.6 mm = 0.24 in diameter), length 150 mm (6 in).

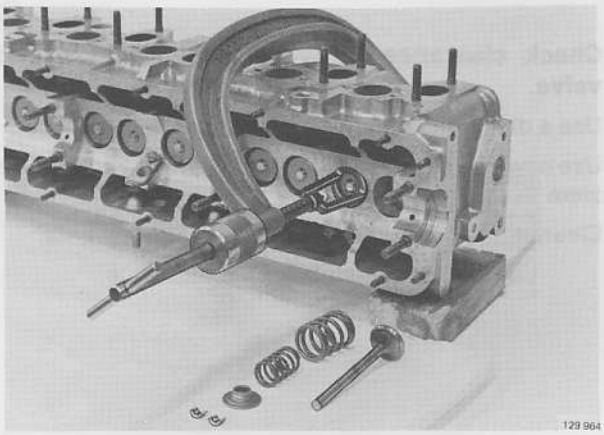

E9

Remove valve springs and valves

Important! Do not interchange parts.

Depress valve springs with a spring compressor tool.

Remove:

- retainers (collet)
- upper spring seat
- springs
- valve.

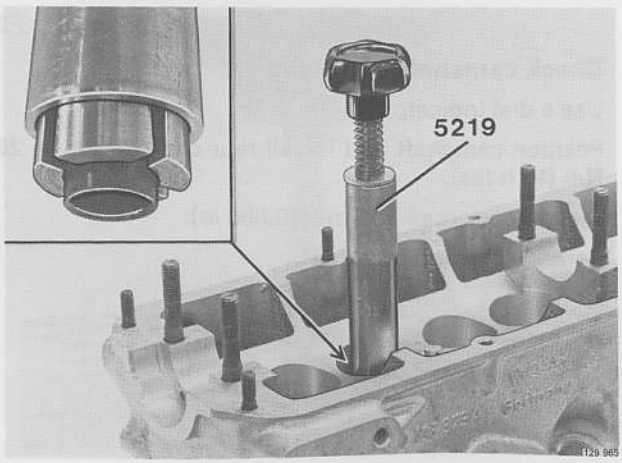

E10

Remove seals from valve guides

Use tool **5219.**

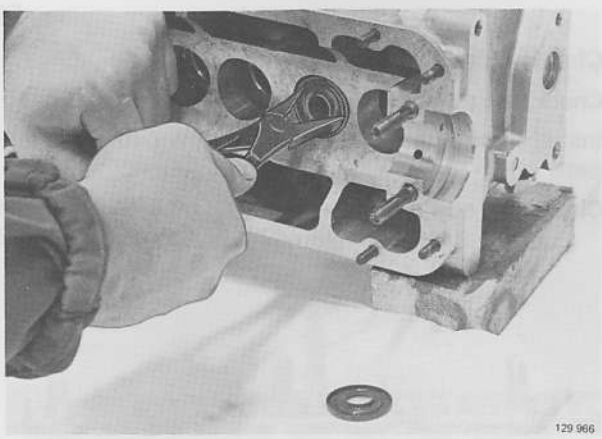

E11

Remove lower valve spring washers

Use a pair of external lock ring pliers with flat jaws.

F. Cylinder head, cleaning – inspection

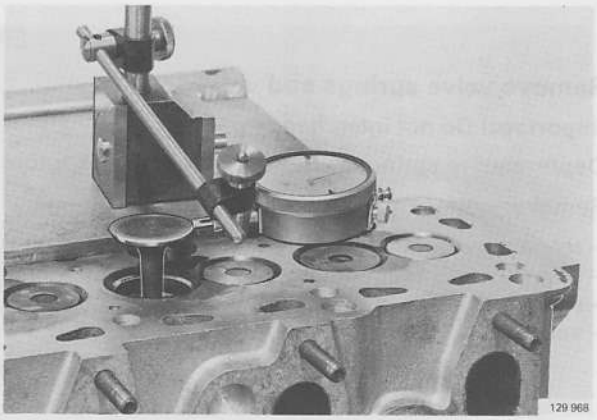

F1

Check clearance between valve guides and valve.

Use a dial indicator.

Use new valves (intake and exhaust) with end of valve stem flush with valve guide.

Clearance = **1.3 mm** (0.05 in).

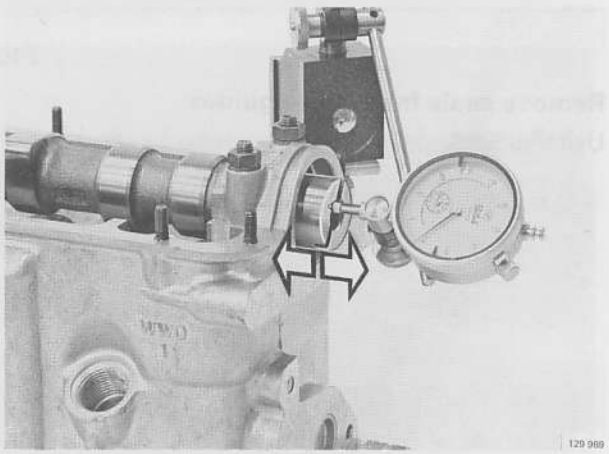

F2

Check camshaft end float

Use a dial indicator.

Position camshaft and install rear cap. Torque to **20 Nm** (15 ft lbs).

Clearance = max **0.15 mm** (0.006 in).

Remove cap and camshaft.



F3

Check discs

Check disc play. Replace disc if worn or scored.

Install discs with numbers facing down, towards tappets.

Clearance, new parts ..... 0.016–0.046 mm
(0.0006–0.0018 in)

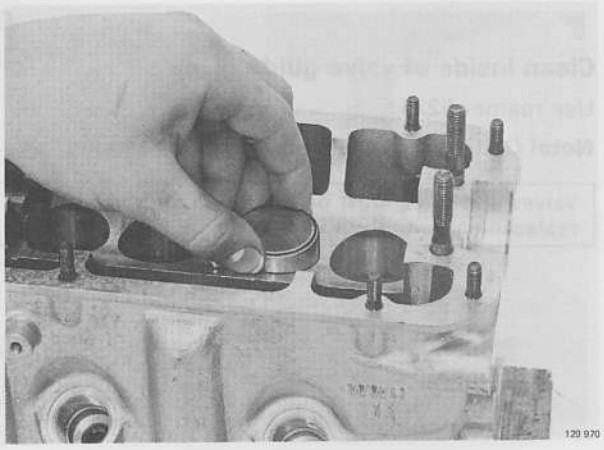

F4

Check tappets

Place tappets in cylinder head.

Check fit and clearance.

Clearance, new parts ..... 0.025–0.075 mm (0.001–0.003 in)

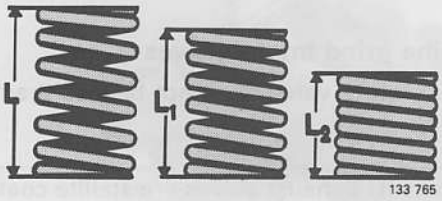

F5

Check valve springs

Inner springs

Length		Load	
mm	**(in)**	**N**	**(lbs)**
33.9	(1.334)	0	(0)
28.6	(1.126)	67–77	(15–17,5)
18.3	(0.720)	209–231	(47–52.2)

Outer springs

Length		Load	
mm	**(in)**	**N**	**(lbs)**
40.2	(1.583)	0	(0)
32.6	(1.283)	167–185	(38–42)
22.3	(0.878)	433–479	(98–108.3)

Replacing valve guides
Operations F6–8

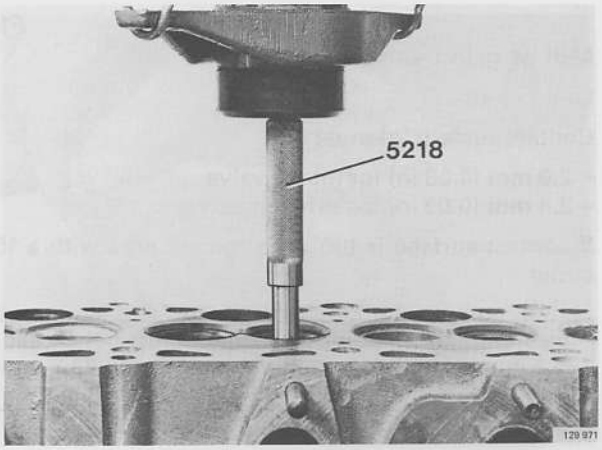

F6

Press out valve guide

Use drift **5218**. Press from combustion chamber side.

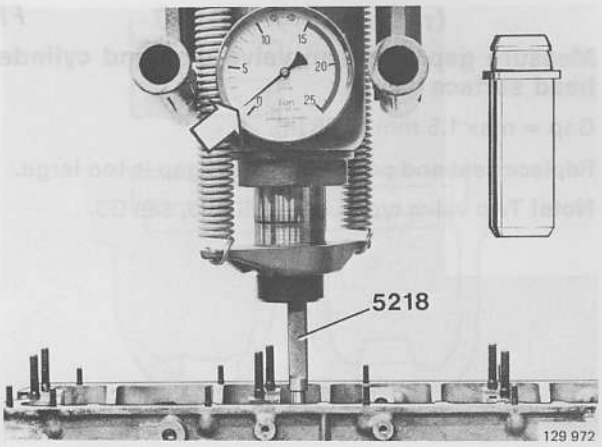

F7

Press in new valve guide

Lubricate valve guide.

Use drift **5218**. Press in from camshaft side.

Press in guide until flange on guide contacts cylinder head. In this position press force must not exceed 1 ton since flange may break off.

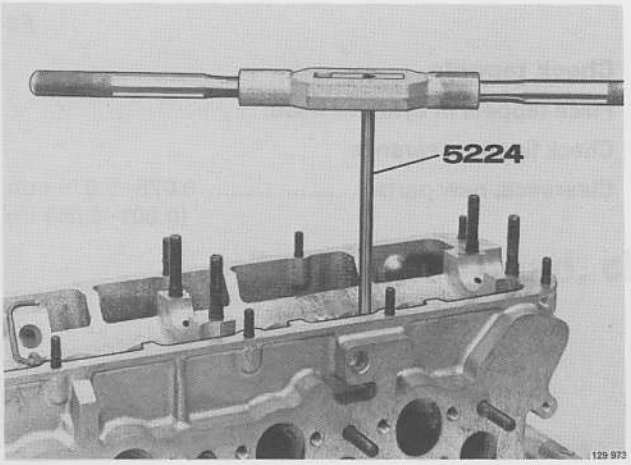

F8

Clean inside of valve guide

Use reamer **5224.**

Note! Cutting oil must be used when reaming.

Valves and seats must be ground-in after valve guide replacement.

Grinding-in valves and seats
Operations F9–12

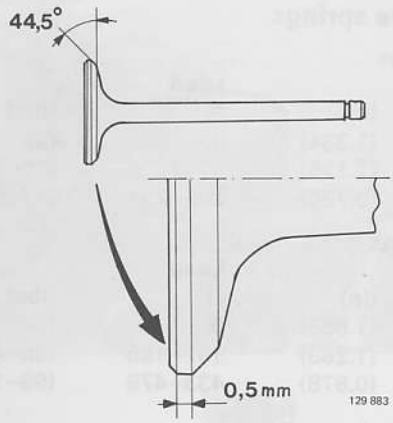

F9

Machine grind intake valves

Edge of intake valve must not be less than **0.5 mm** (0.02 in).

Important! Exhaust valves are stellite coated and must not be ground by machine. Grind-in valve on seat with grinding paste.

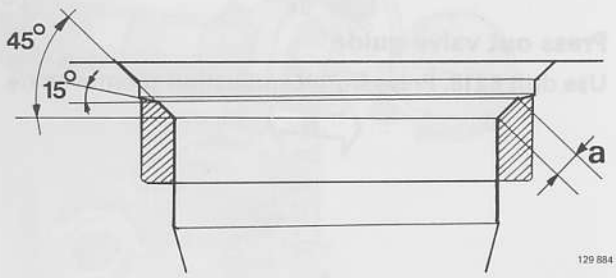

F10

Mill or grind valve seats

Grind to **45°.**

Contact surface (a) must be:

- **2.0 mm** (0.08 in) for intake valve
- **2.4 mm** (0.09 in) for exhaust valve.

If contact surface is too wide reduce area with a 15° cutter.

Important! Outer diameter of cutter must not exceed **35.2 mm** (1.39 in) for intake valve seats and **33.2 mm** (1.31 in) for exhaust valve seats.

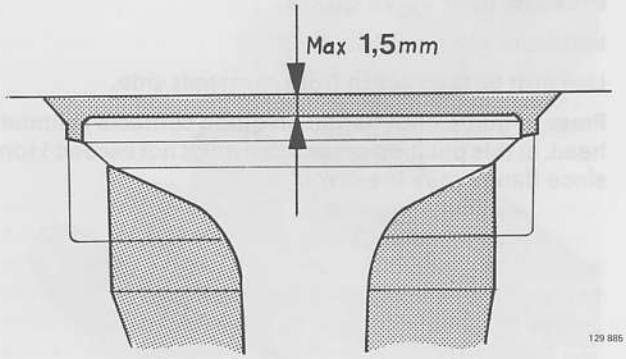

F11

Measure gap between valve disc and cylinder head surface

Gap = max 1.5 mm (0.06 in).

Replace seat and possibly valve if gap is too large.

Note! Two valve types are available, see G3.

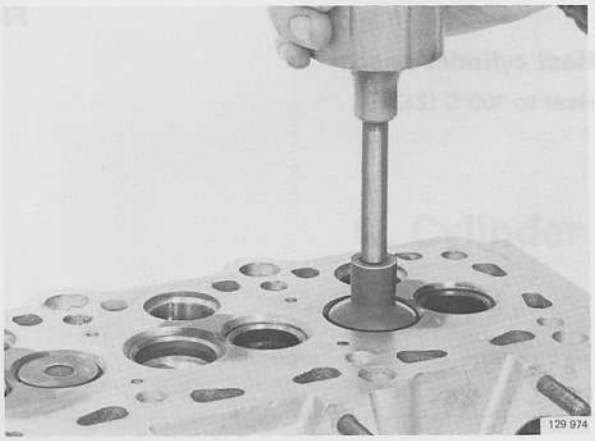

F12

Grind-in valves with paste

Clean valves thoroughly after grinding.

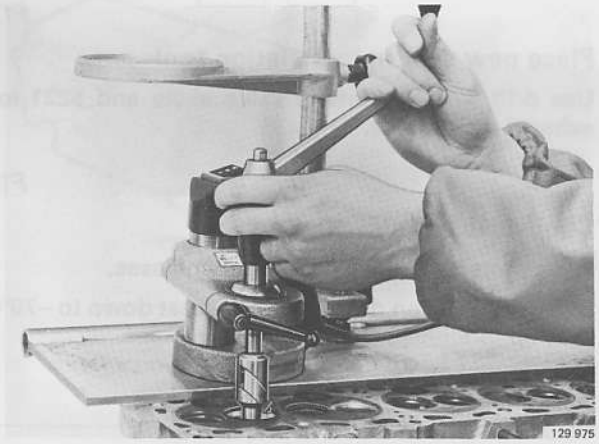

Replacing valve seats
Operations F13–21

Valve guides must be replaced before replacing seats, see F6–8, page 47.

F13

Clean combustion chamber

Edge of seat must be clearly visible after cleaning.

F14

Remove valve seat

Mill valve seat, using cutters such as Mira (P/N 9986045). Refer to manufacturer's instructions. Make sure that seat in cylinder head is not damaged.

Clean surfaces thoroughly.

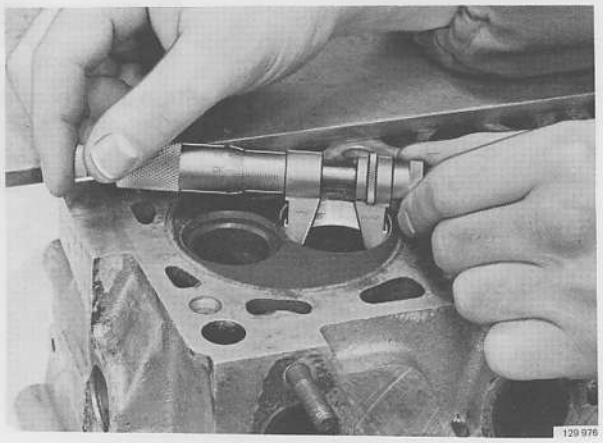

F15

Measure diameter of seat recess in cylinder head and of valve seat

Use an internal micrometer to measure seat recess.

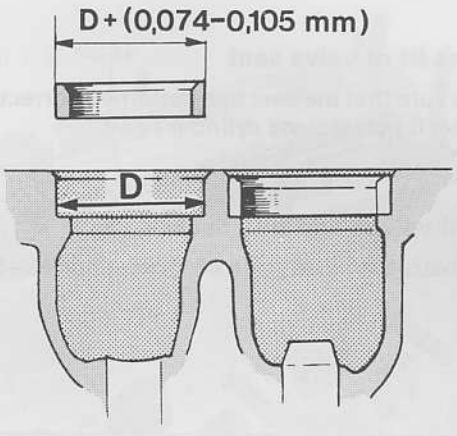

	Standard (production version)	
Diameter, seat recess, mm (in)		
intake	37.000–37.016	(1.4567–1.4573)
exhaust	33.000–33.016	(1.2992–1.2998)
Diameter, seat,		
intake	37.090–37.105	(1.4602–1.4608)
exhaust	33.090–33.105	(1.3028–1.3033)

	Oversize (replacement parts version)	
Diameter, seat recess, mm (in)		
intake	37.200–37.216	(1.4646–1.4652)
exhaust	33.200–33.216	(1.3071–1.3077)
Diameter, seat,		
intake	37.290–37.305	(1.4681–1.4687)
exhaust	33.290–33.305	(1.3106–1.3112)

When replacing valve seats: the interference between the valve seat and its bore in the cylinder head shall be **0.074–0.105 mm** (0.0029–0.0041 in) i.e. valve seat diameter must be 0.074–0.105 mm (0.0029–0.0041 in) greater than the diameter of the bore in the cylinder head. Replace cylinder head if interference is too small. Mill seat recess if interference is too large.

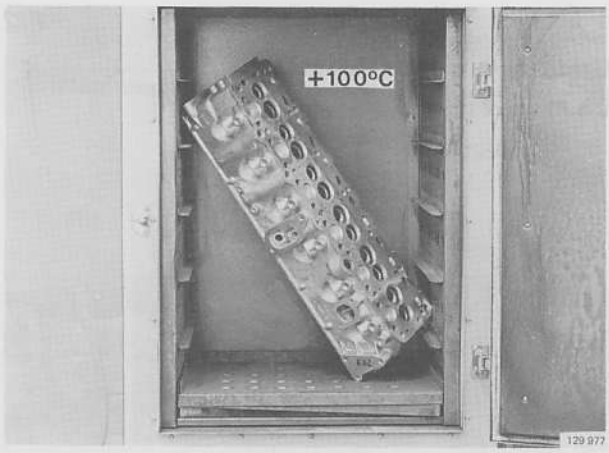

F16

Heat cylinder head

Heat to 100°C (212°F).



F17

Place new seat in installation tool

Use drift **5220** for **intake** valve seats and **5221** for **exhaust** valve seats.

F18

Cool valve seat

Wear protective gloves and safety glasses.

Use liquid carbon dioxide to cool seat down to −70°C (−94°F).

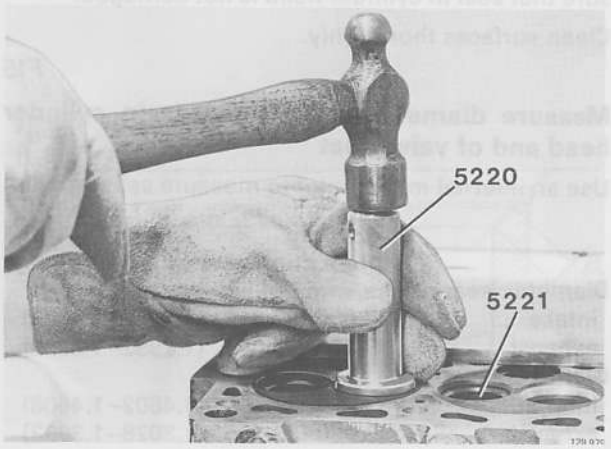

F19

Tap-in valve seat

Note! This must be done quickly, within 3–4 seconds to avoid temperature loss.

F20

Check fit of valve seat

Make sure that the seat has bottomed correctly and is secure. If not, replace cylinder head.

F21

Grind valves and mill seats

See instructions on page 48, operations F9–12.

G. Cylinder head, assembly

New cylinder head

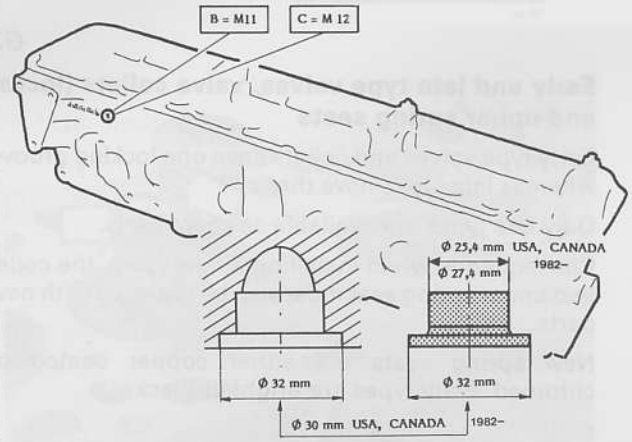

Important

- New cylinder head must be the same type as the old. Cylinder heads designed for use with M 12 bolts must not be used with M 11 bolts.

  Cylinder heads can be identified as follows (see illustration at left):
  – Number series followed by B = M 11
  – Number series followed by C = M 12
- USA/Canada 1982– has a different type of cylinder head and swirl chamber. Swirl chamber and its bore is 2 mm (0.080 in) smaller in diameter than other types.

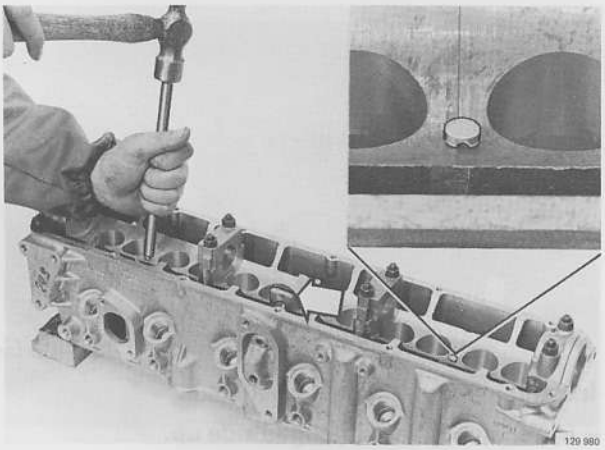

New cylinder head
Operation G1

G1

Install oil jets and pin studs in cylinder head

Carefully tap in oil jets using a brass punch.

Note! Turn outer jets to point across cylinder head, see fig.

Important! Check specification and type of cylinder head. M 12 bolts must not be used with M 11 bolts.

Different type cylinder heads are used for USA/Canada.

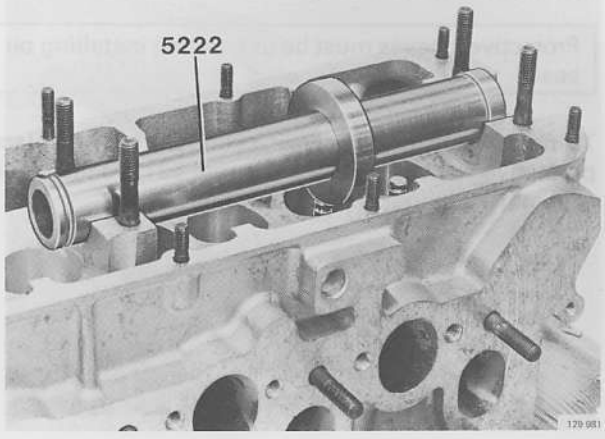

G2

Check valve stem position in relation to camshaft

This measurement is carried out to ensure that there is sufficient adjustment lattitude for valves.

Place gauge **5222** with largest diameter ring, on cylinder head. (Small ring is for B17–B23 engines).

Note! Front bearing recess diameter is larger than others. Make sure that gauge is positioned correctly.

Taking each valve in turn, check that stem does not contact gauge. If this happens, grind valve stem.

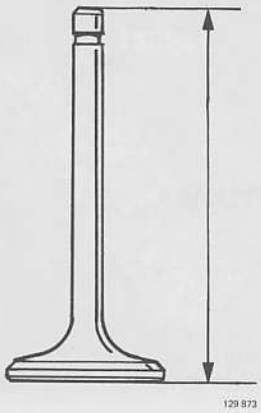

Valve length, mm (in)

	New	Min
Intake valve	104.8 (4.126)	104.3 (4.106)
Exhaust valve	104.6 (4.118)	104.1 (4.098)

G3

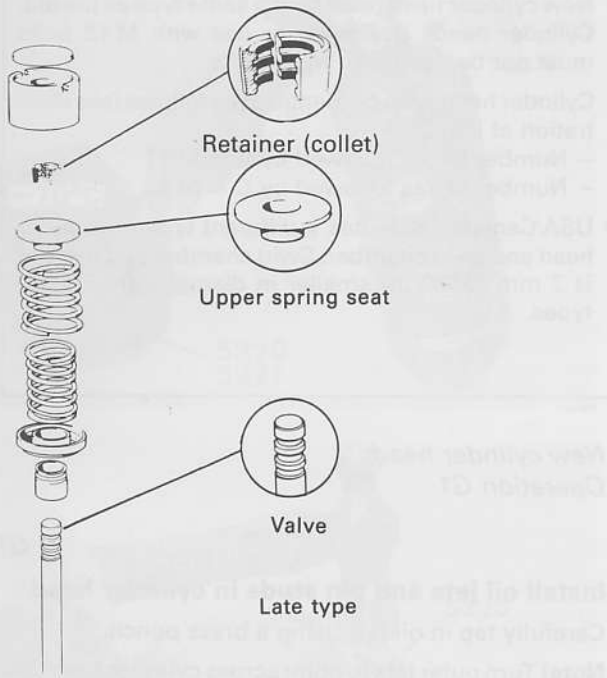

Early and late type valves, valve collets (locks) and upper spring seats

Early type valves and collets have one locking groove whereas late types have three.

Only late types are available as spare parts.

Consequently when installing a new valve, the collet and upper spring seat must also be replaced with new parts.

New spring seats are either copper coated or chromed. Early types are bright or black.

G4

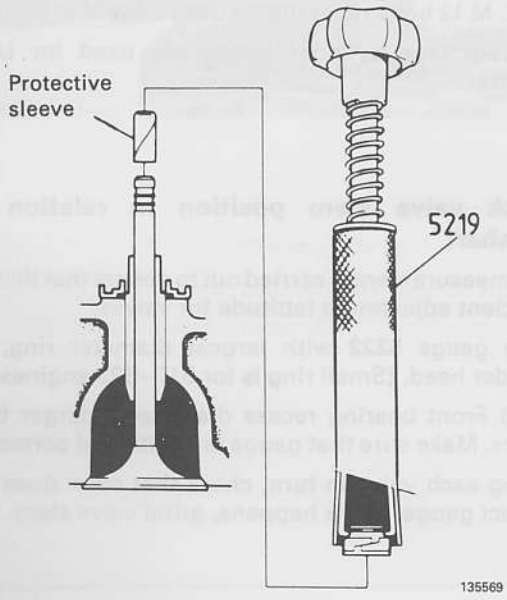

Install:

– upper spring seats, flanged side up.

Install valve stem oil seal.

Protective sleeves must be used when installing oil seal.

To install valve, place valve in cylinder head and place protective sleeve on stem. Use tool **5219** to install oil seal, note that tool should abut flange seal.

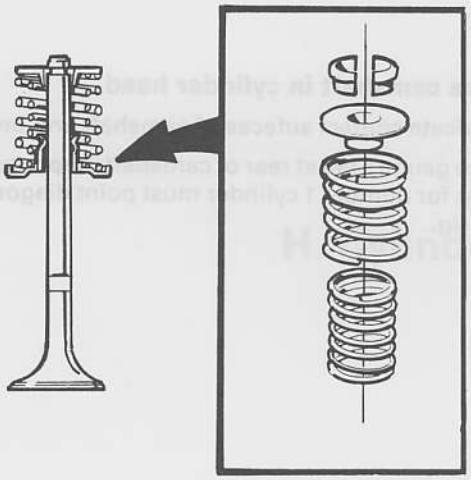
136 682

G5

Install:

- inner and outer valve springs
- upper valve seat
- retainer (collet).

Important! Two types of valves, upper spring seats and collets are in use.

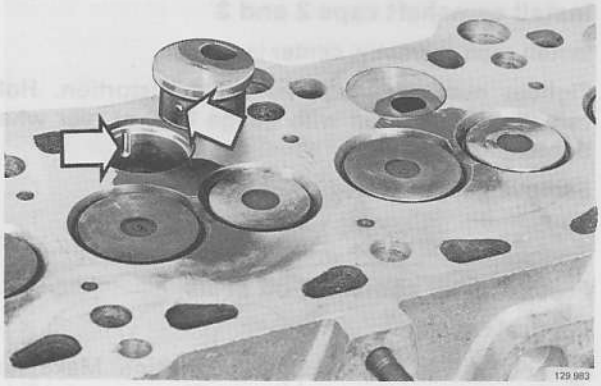
129 983

G6

Install swirl chambers

Check that steel ball is in chamber.

If not, install new swirl chamber.

Make sure that ball fits in slot in cylinder head. Tap down swirl chambers.

Important! Special swirl chambers (different diameter) for USA/Canada 1982-.

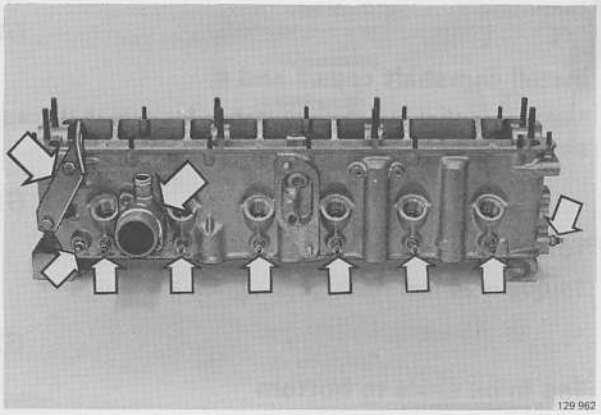
129 962

G7

Install:

- glow plugs. Tightening torque 40 Nm (30 ft lbs)
- temperature senders (2X). Same type front and rear
- connecting flange for coolant hose (Allen 5 mm). Install new gasket. Tightening torque 10 Nm (7 ft lbs).
- lifting eyes.

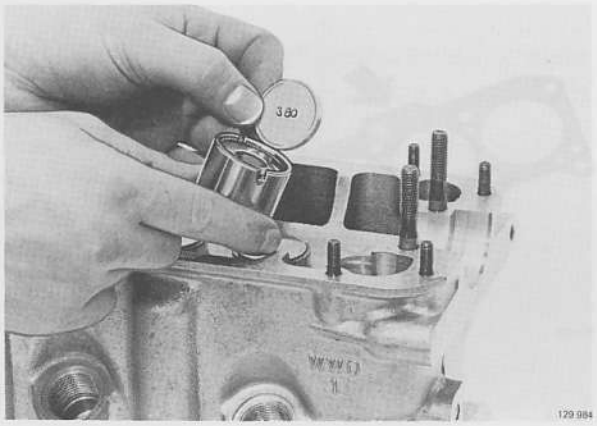
129 984

G8

Install tappets with discs

Smear tappets and discs with oil before installing.

Number on discs should face down.

Check that tappets slide easily without sticking.

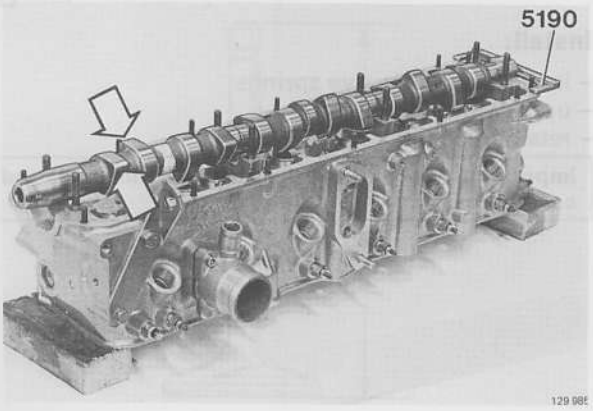

G9

Place camshaft in cylinder head

Lubricate contact sufaces of camshaft and bearings.

Place gauge **5190** at rear of camshaft. **Important!** Both cams for number 1 cylinder must point diagonally up, see fig.

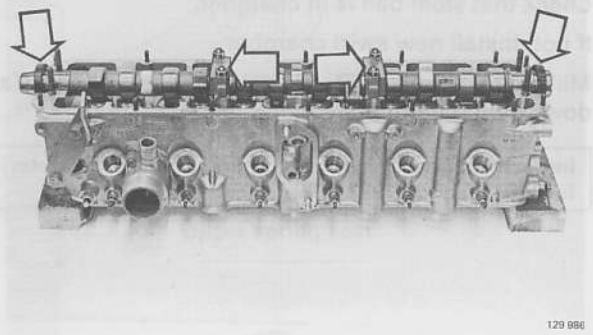

G10

Install camshaft caps 2 and 3

Install caps correctly, center is off-set.

Tighten nuts crosswise to avoid distortion. Hold camshaft in position with gauge **5190** at rear when tightening caps.

Remove gauge **5190**.

G11

Press in new camshaft oil seals

Lubricate seals.

Do not push in seals to bottom position. Make sure that seals are "square".

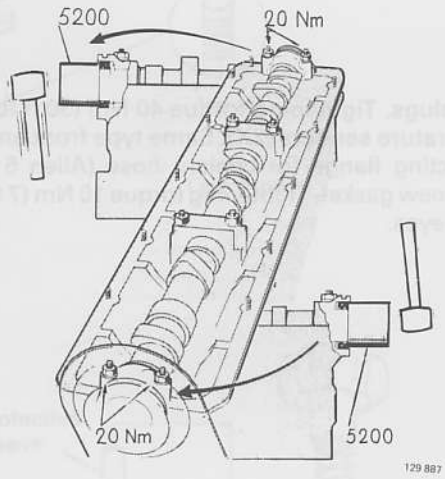

G12

Install camshaft caps 1 and 4

Make sure that the thrust washer for camshaft cap 4 sits correctly.

G13

Torque all four caps

Torque = **20 Nm** (15 ft lbs).

G14

Tap in oil seals to bottom

Use sleeve **5200** and a plastic mallet.

H. Cylinder head, installing

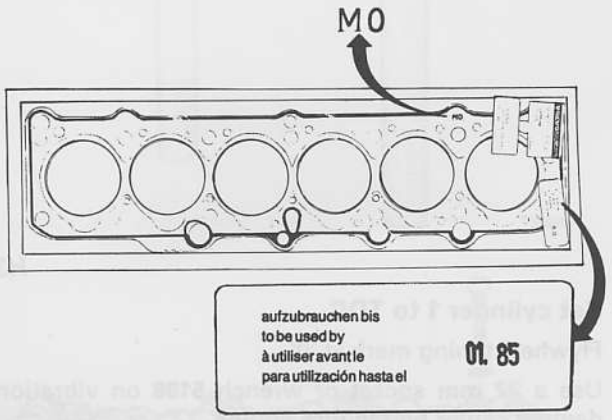

132978

Cylinder head gasket

Observe date code on gasket and packet. Gasket must be used before this date.

Only gaskets with code **MO** or later may be used on D 24 engines.

Date code

To avoid impairing sealing properties of gasket do not open packet until gasket is to be used.

Month	Jan	A
	Feb	B
	Mar	C
	Apr	D
	May	E
	June	F
	July	G
	Aug	H
	Sept	J
	Oct	K
	Nov	L
	Dec	M
Year	1980	0

MO

0 = 1980
1 = 1981
2 = 1982
etc.

Take care not to damage packet and cause damage to gasket, (teflon strip, rubber seal).

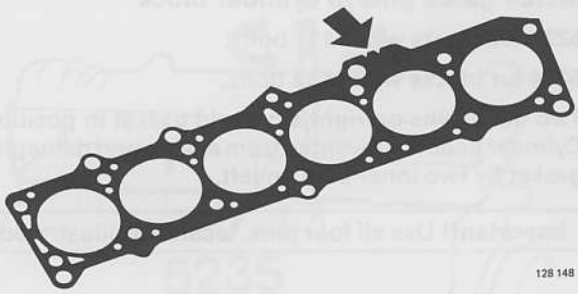

128 148

Install same type of gasket as before (i.e. same no. of notches), OBEN facing up.

If pistons, connecting rods etc. are replaced, piston height must be measured, and gasket chosen according to table on page 56.

Three different types of gaskets are available. Type to be fitted depends on piston height above cylinder block.

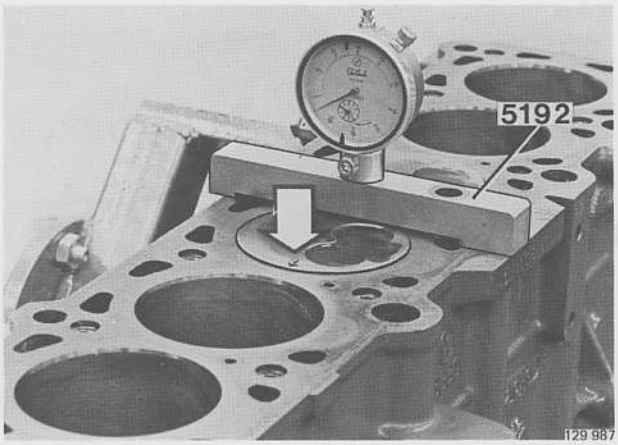

H1

Measure piston height above cylinder block and select gasket

Piston height above cylinder block mm (in)	Gasket notches	thickness mm (in)
0.67–0.80 (0.026–0.031)	1	1.4 (0.055)
0.81–0.90 (0.032–0.035)	2	1.5 (0.059)
0.91–1.02 (0.036–0.040)	3	1.6 (0.063)

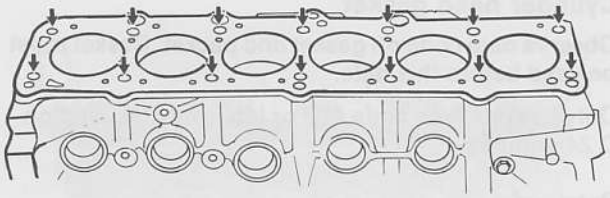

H2

Clean holes for cylinder head bolts

Oil and dirt must be removed from holes otherwise gasket may leak as a result of insufficient tightening pressure.

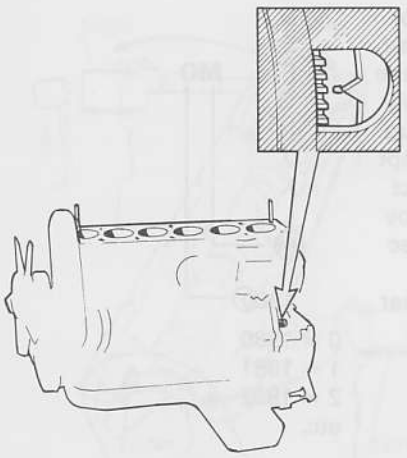

H3

Set cylinder 1 to TDC

Flywheel timing mark at '0'.

Use a **27 mm** socket or wrench **5188** on vibration damper center bolt to turn engine.

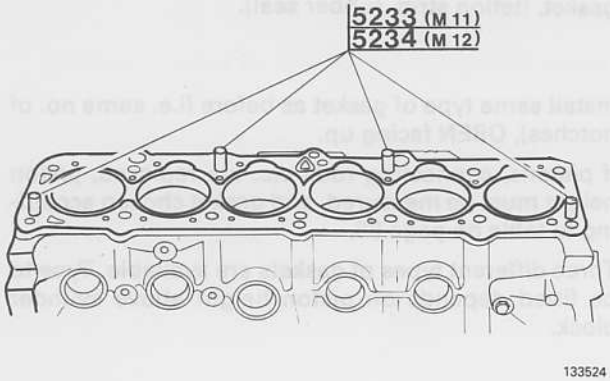

H4

Install guide pins in cylinder block

5233 for blocks with M 11 bolts.

5234 for blocks with M 12 bolts.

Two outer pins on right side hold gasket in position. Cylinder head is prevented from sliding and damaging gasket by two inner pins on left.

Important! Use all four pins, located as illustrated.

H5

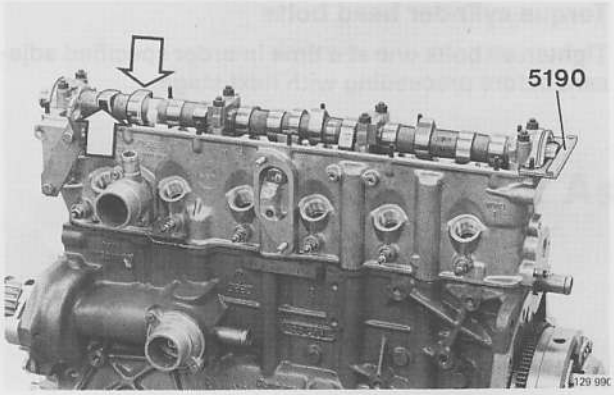

Install new cylinder head gasket

OBEN facing up.

H6

Position cylinder head

First set camshaft so that number 1 cylinder is at injection (both cam lobes should point diagonally upwards).

Prevent camshaft from moving with stop **5190.**

Important! Camshaft must be locked otherwise valves may strike pistons.

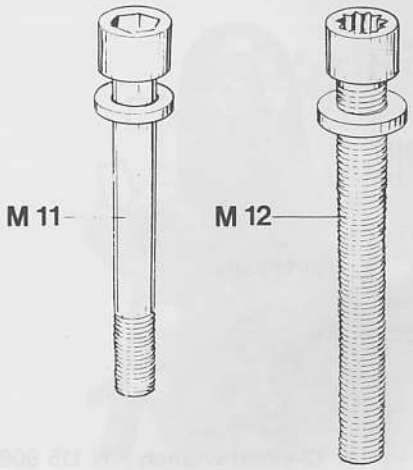

Cylinder head bolts

Two types of cylinder head bolts are in use.

Early type bolts have M 11 threads. These bolts can be reused with **new** washers. Fit washers with cup shape facing up.

Late type bolts have M 12 threads along entire length. These bolts **must not** be reused. Washers may however be reused.

H7

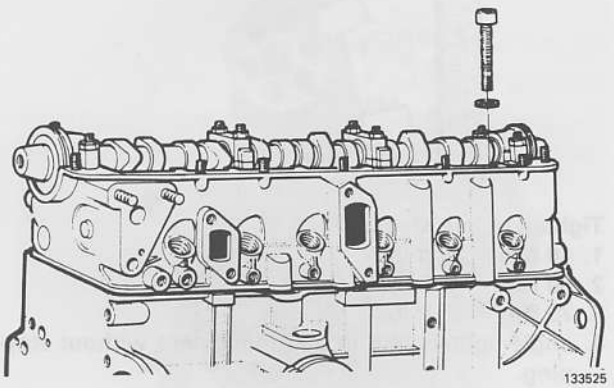

Install cylinder head bolts

Lubricate threads and sliding surface of washers. Place bolts in holes without guide pins.

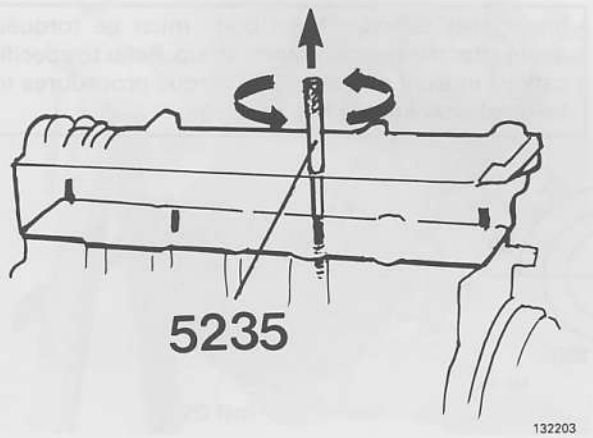

Remove guide pins. Use tool **5235.**

Install remaining bolts.

H8



133537

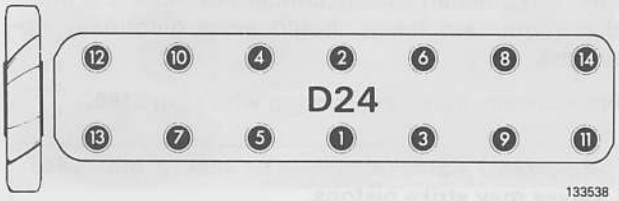

133538

Torque cylinder head bolts

Tighten all bolts one at a time in order specified adjacent before proceeding with next stage.



M 11 bolts

Allen key 10 mm

133529

Tighten in three stages:
1. **50 Nm** = 37 ft lbs
2. **70 Nm** = 51 ft lbs
3. **90 Nm** = 66 ft lbs

Important! Cylinder head bolts must be torqued again after the engine is warmed-up. Refer to specifications in front of manual for torque procedures to be used after engine has been run.

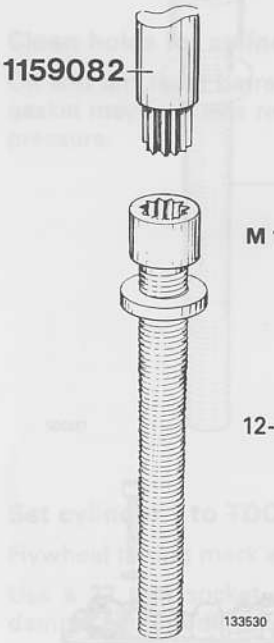

M 12 bolts

12-sided wrench P/N 115 9082-5

133530

Tighten in four stages:
1. **40 Nm** = 29 ft lbs
2. **60 Nm** = 44 ft lbs
3. **75 Nm** = 55 ft lbs
4. angle-tighten **180°** in one movement without stopping.

Important! Cylinder head bolts must be torqued again after the engine is warmed-up. Refer to specifications in front of manual for torque procedures to be used after engine has been run.

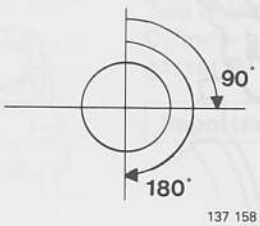

137 158

J. Assembly

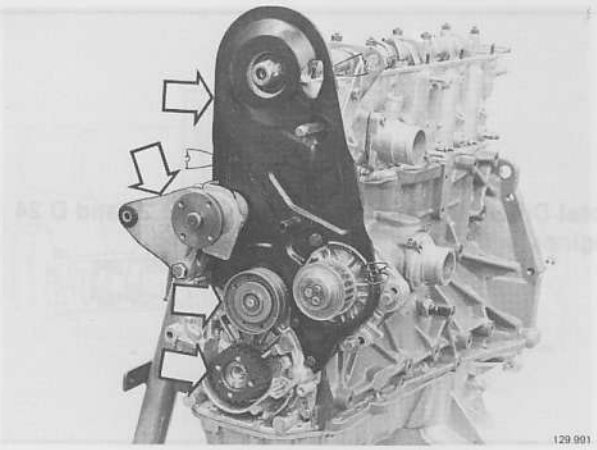

TIMING GEAR

J1

Install

- cover plate. Do not tighten coolant pump mounting bolts fully at this stage
- fan/alternator mounting bracket
- idler pulley. Tap pulley into position and install center bolt
- crankshaft gear.

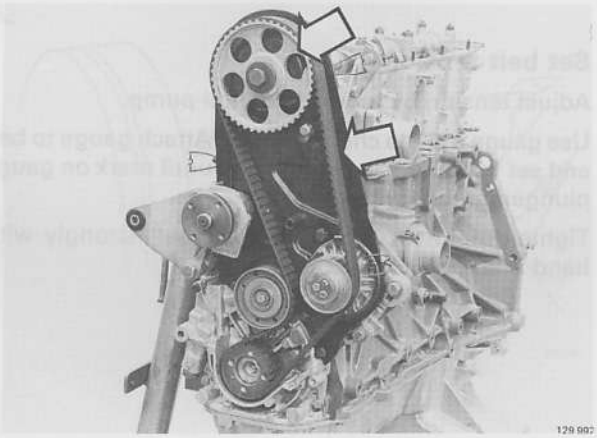

J2

Install camshaft front sprocket and gear belt

Ensure that belt sits correctly on all gears. Tighten center bolt by hand, it should be possible to turn sprocket on camshaft.

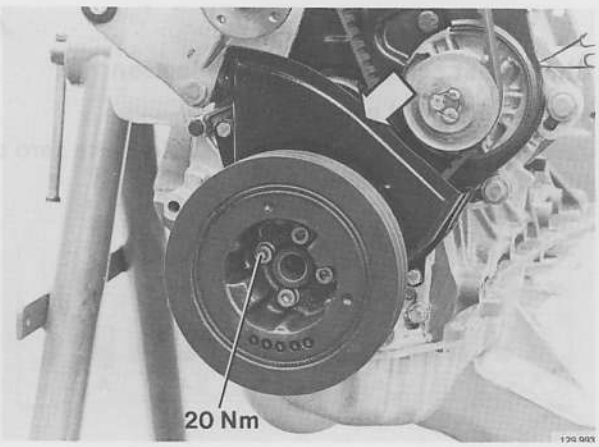

J3

Install lower timing gear cover and vibration damper

Damper can only be fitted in one way. Pin on crankshaft must fit in vibration damper.

Torque inhex bolts to **20 Nm** (15 ft lbs).

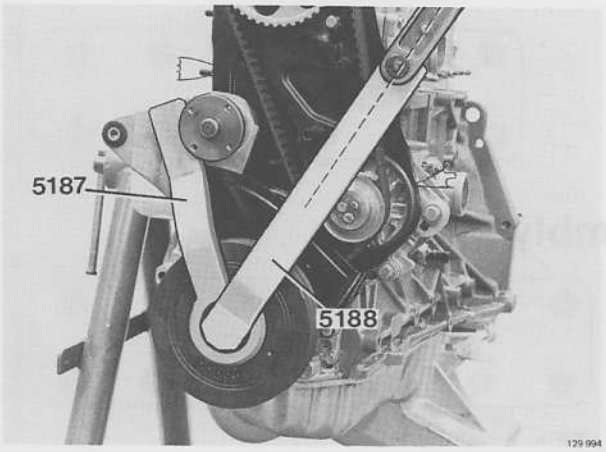

J4

Install center bolt

Smear threads and mating surface with sealer P/N 277961-9.

Use wrench **5187** (rest on cooling fan journal) to hold vibration damper and wrench **5188** to torque center bolt to **350 Nm** (255 ft lbs).

Important! Torque 350 Nm (255 ft lbs) applies only if wrench 5188 is used. Also, torque wrench must be in line with wrench 5188.

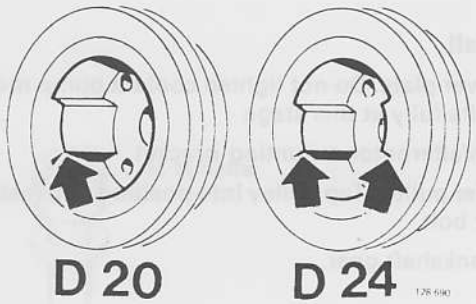

Note! Different vibration dampers for D 20 and D 24 engines.

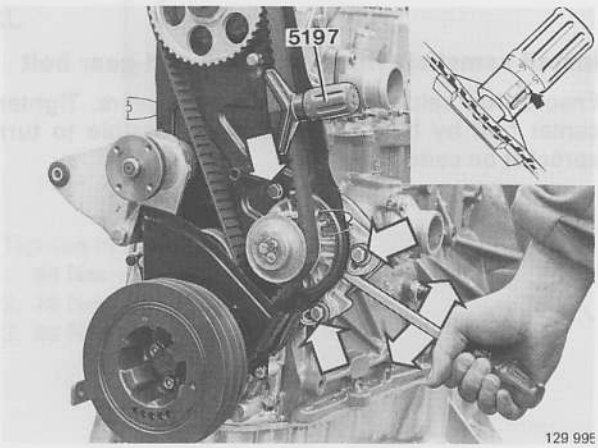

J5

Set belt tension

Adjust tension by moving coolant pump.

Use gauge **5197** to check tension. Attach gauge to belt and set to **12.5** units. Stretch belt until mark on gauge plunger is flush with sleeve.

Tighten mounting bolts. Depress belt strongly with hand and recheck/adjust tension.

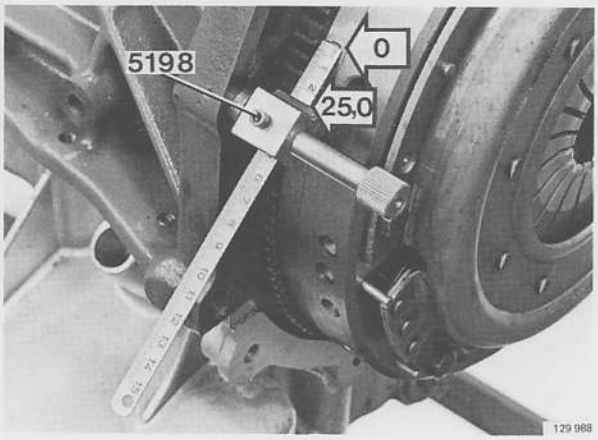

J6

Check that cyl. 1 is at TDC – injection

Use tool **5198.** Set gauge to 25.0.

Zero mark on flywheel should coincide with zero of ruler. Adjust if necessary.

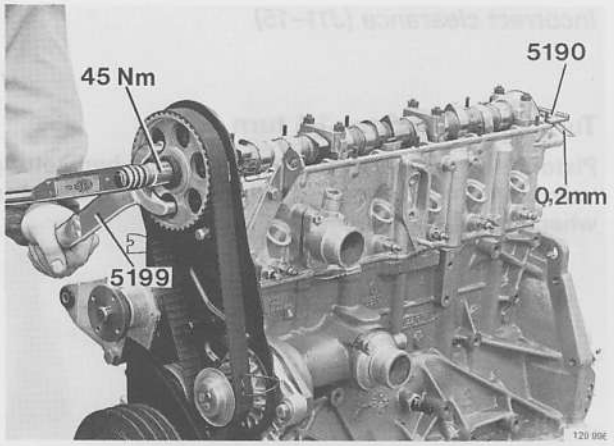

J7

Lock camshaft in O-position

Place gauge **5190** at rear of camshaft. Insert a **0.2 mm** feeler gauge beneath left side of gauge to compensate for timing gear clearance.

J8

Tighten camshaft front sprocket and remove gauge 5190

Use **5199** to prevent sprocket from turning.

Torque center bolt to **45 Nm** (33 ft lbs).

Remove gauge **5190** and feeler gauge.

Valve adjustment
Operations J9–17

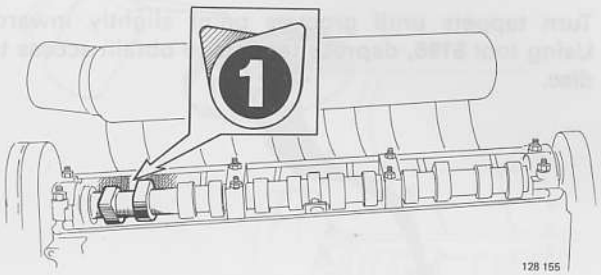

J9

Turn engine until cyl. 1 is at TDC – injection

Always use vibration damper center bolt to turn engine. (27 mm socket or wrench **5188**).

Both cylinder 1 cams should point obliquely upwards.

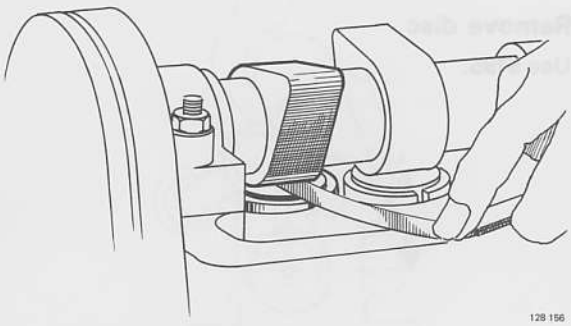

J10

Check valve clearance for cyl. 1

Checking values

Cold engine	mm	in
Intake	0.15–0.25	0.006–0.010
Exhaust	0.35–0.45	0.014–0.018
Warm engine		
Intake	0.20–0.30	0.008–0.012
Exhaust	0.40–0.50	0.016–0.020

If the clearance is according to the above values it does not need to be adjusted.

D 20

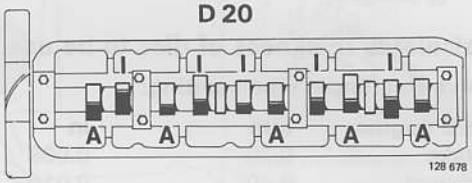

D 24

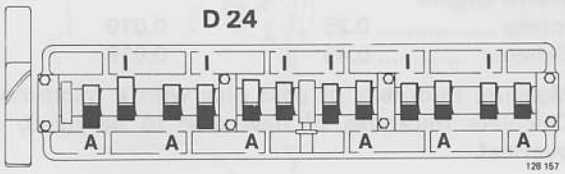

I = intake valve
A = exhaust valve

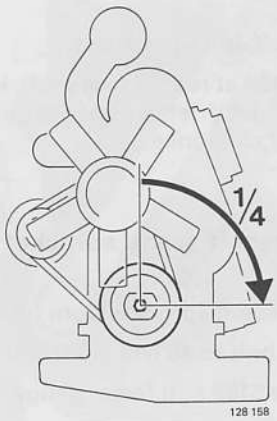

Incorrect clearance (J11–15)

J11

Turn engine approx. 1/4 turn

Piston must not be at top dead center when setting valve clearance, otherwise valves will contact piston when tappet is depressed.

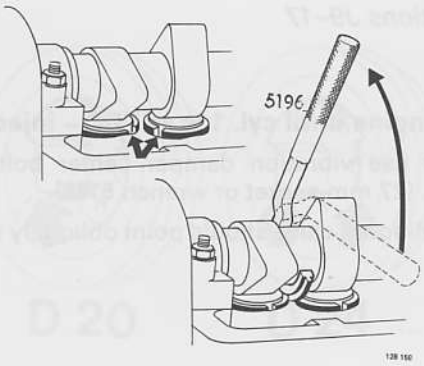

J12

Depress tappets

Turn tappets until grooves point slightly inward. Using tool **5196,** depress tappets to obtain access to disc.

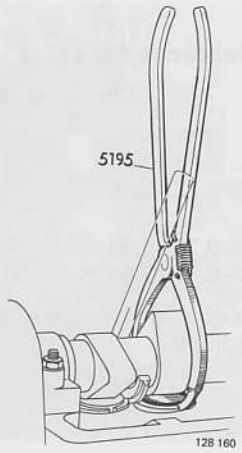

J13

Remove disc

Use **5195.**

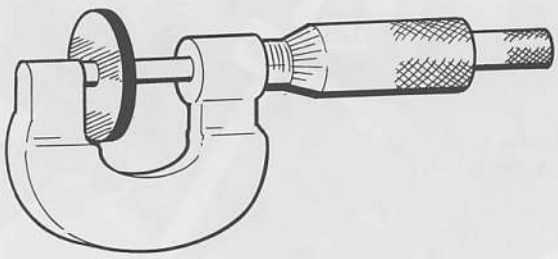

J14

Calculates thickness of disc to be used

Valve clearances when setting:

Cold engine	**mm**	**in**
Intake	0.20	0.008
Exhaust	0.40	0.016
Warm engine		
Intake	0.25	0.010
Exhaust	0.45	0.018

Measure thickness of cold disc with a micrometer. Calculate thickness of new disc to be used, see overleaf.



128 161

Example	mm	in
Measured valve clearance	0.20	0.55
Specified valve clearance	0.25	0.45
	−0.05	+0.10
Thickness, old disc	4.00	4.00
	−0.05	+0.10
Thickness, new disc	3.95	4.10

Always use new discs. Disc thicknesses available = 3.00–4.25 mm at increments of 0.05 mm.

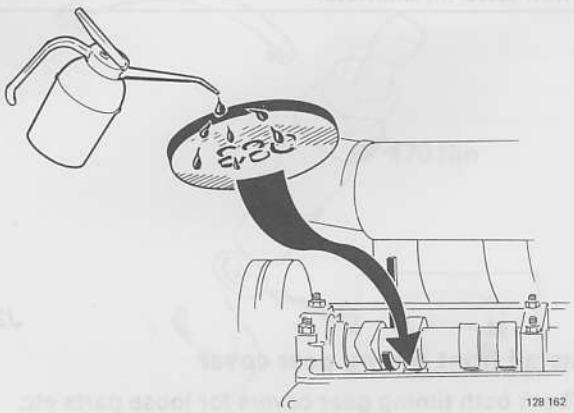
128 162

J15

Position new disc and remove pliers

Disc should be lubricated and installed with numbers facing down.

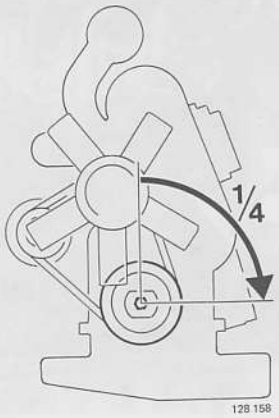

128 158

J16

Check/adjust valve clearance for remaining cylinders in following order

D 20, 1-2-4-5-3
D 24, 1-5-3-6-2-4

Important! Do not forget to rotate crankshaft 1/4 turn before check/adjusting valve clearance.

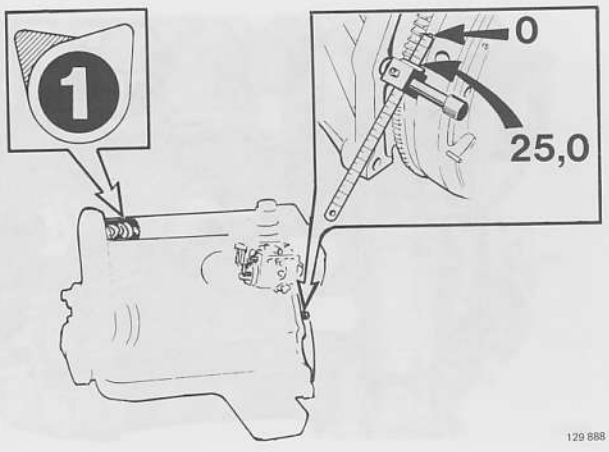

129 888

J17

Recheck valve clearance for all cylinders

Rotate engine several turns before rechecking.

J18

Turn engine until cyl. 1 is at TDC – injection

Both cyl. 1 cams should point obliquely upwards.

Use tool **5198.**
Set gauge to 25.0.

Zero mark on flywheel should coincide with zero of ruler. Adjust if necessary.

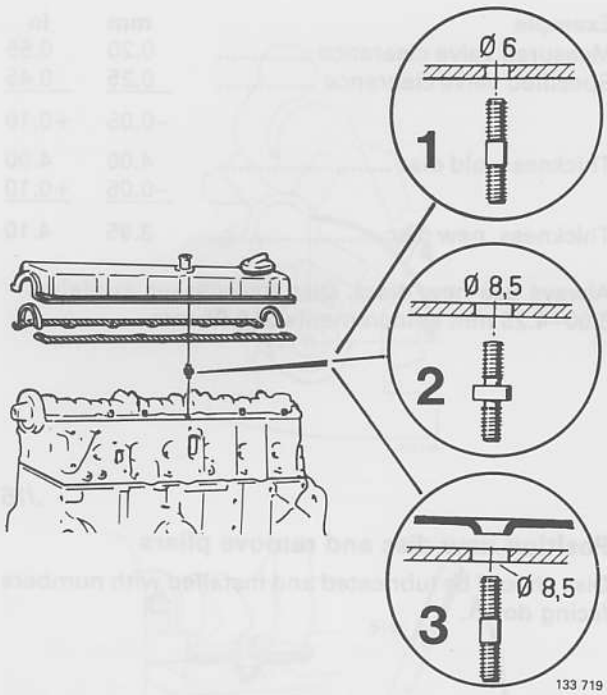

J19

Install valve cover

If necessary install new gaskets.

Three different types of assemblies are in use:

Type 1.
Pin stud without spacer, gasket stud hole = 6 mm (0.24 in) diameter.

Type 2.
Pin stud with spacer, gasket stud hole = 8.5 mm (0.33 in) diameter.

Type 3.
Pin stud without spacer, stud holes in valve cover are countersunk, gasket stud hole diameter = 8.5 mm (0.33 in) diameter.

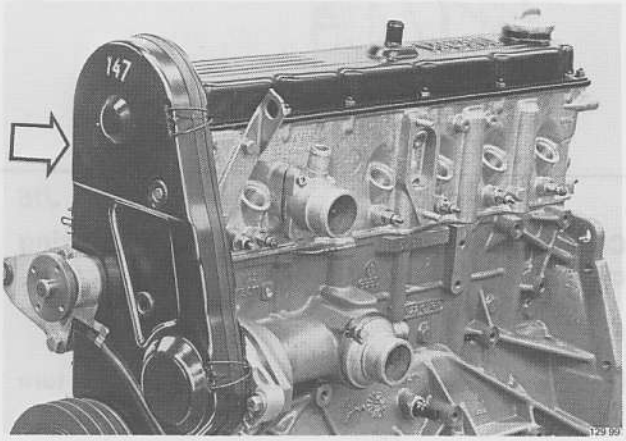

J20

Install front timing gear cover

Check both timing gear covers for loose parts etc.

K. Installing parts on engine

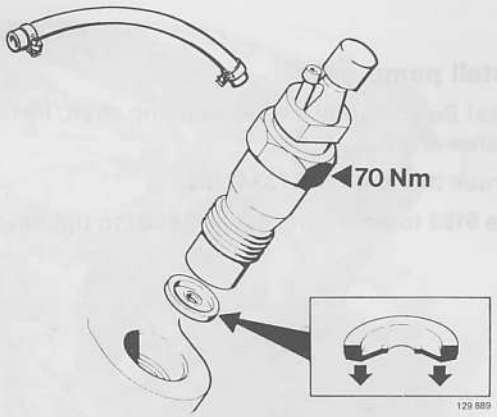

K1

Install injectors

Place new heat shields in cylinder head. Turn shields as illustrated.

Screw in injectors. Torque to **70 Nm** (50 ft lbs).

Reconnect fuel delivery lines between injectors.

It is advisable to check condition of injectors when reconditioning cylinder head. See instructions in service manual section 2(23–29) D 20, D 24 engines.

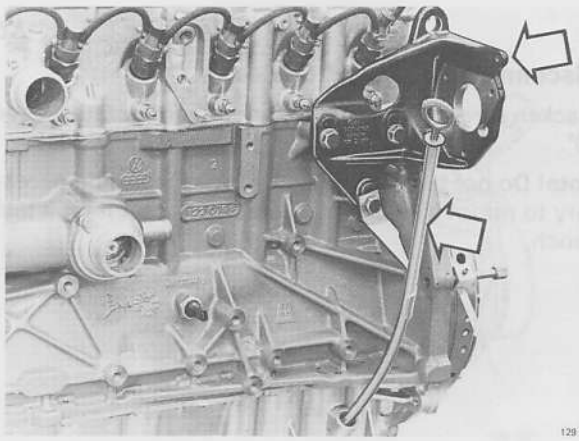

K2

Install pump rear mounting bracket and dipstick + tube

Slide pump bracket to the upper position and tighten one of the bolts.

Install a new O-ring on oil tube.

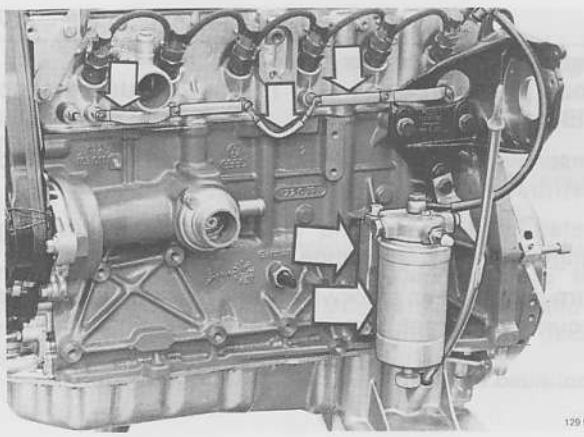

K3

Install:

- copper connectors + leads between glow plugs. Do not screw on nut on number 2 glow plug since wiring harness is secured by this nut at a later stage.
- mounting bracket for fuel filter
- fuel filter and base.

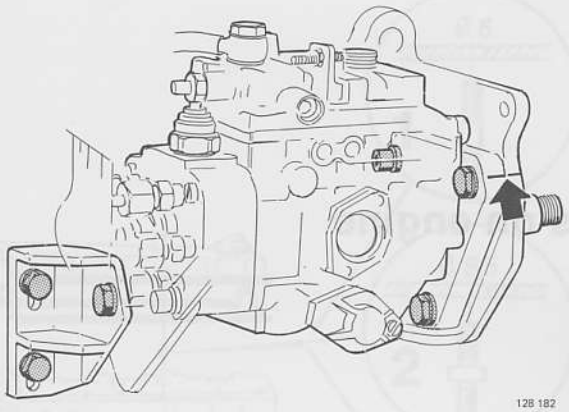

INJECTION PUMP

Removing/installing
Operations K4–14

K4

Position injection pump

Mount pump on engine and secure it with retaining bolts and front mounting bracket. Do not tighten bolts fully at this stage.

Align mark in pump with mark in mounting bracket. Then tighten retaining bolts for pump – mounting brackets.

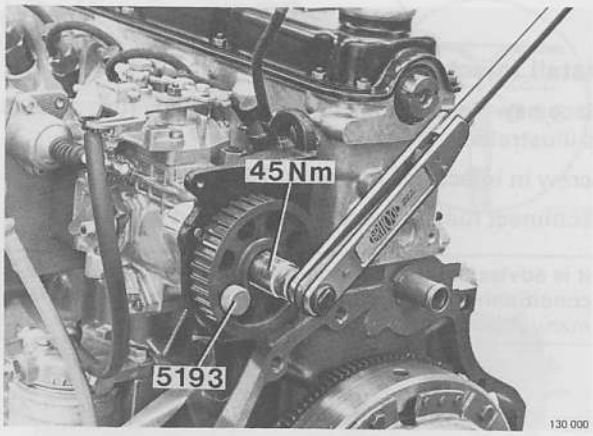

K5

Install pump gear

Note! Be sure to place key in pump shaft. Install gear, washer and nut.

Torque nut to **45 Nm** (33 ft lbs).

Use **5193** to hold sprocket and **5201** to tighten nut.

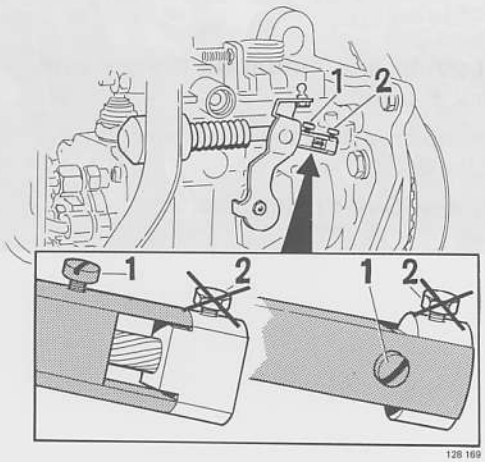

Connected Disconnected

K6

Disconnect cold start device

Slacken screw 1. Push lever forward and rotate sleeve 90°.

Note! Do not turn screw 2, otherwise it will be necessary to remove cold start device and reset it on a test bench.

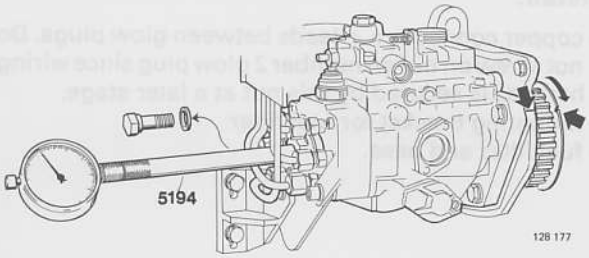

K7

Set dial indicator to zero
Lock pump gear at cyl. 1 injection using stop 5193

Unscrew and remove plug from injection pump distributor.

Install holder **5194** and dial indicator (measuring range 0–3 mm). Set gauge to approx. 2 mm.

Turn pump gear clockwise until mark on gear and mounting bracket coincide.

Continued overleaf

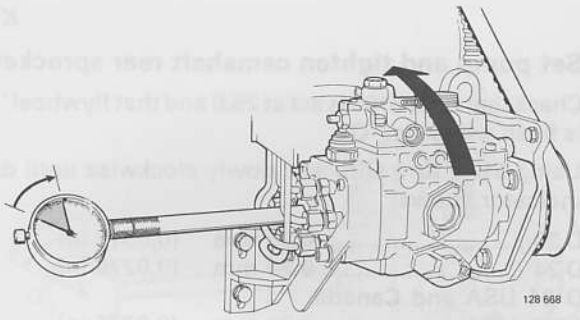

Then turn pump gear back slightly until min reading registers on dial indicator. Set indicator to zero.

Turn pump gear clockwise until mark on gear and pump mounting bracket coincide. Lock gear in this position with stop **5193.** (Insert stop through pump gear into mounting bracket.)



K8

Install camshaft rear sprocket and timing belt

Tighten center bolt by hand, it should be possible to turn sprocket on camshaft.

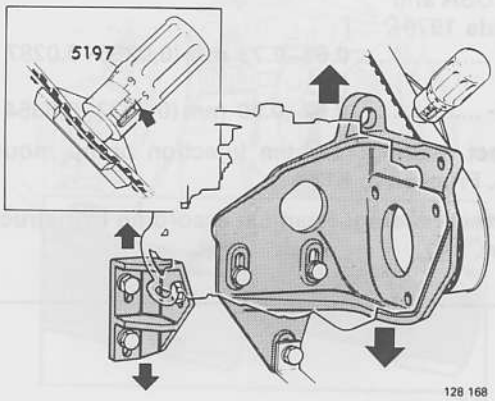

K9

Set belt tension

Adjust tension by moving injection pump.

Use gauge **5197** to check tension. Attach gauge to belt and set to **12.5** units. Stretch belt until mark on gauge plunger is flush with sleeve.

Tighten mounting bolts. Depress belt strongly with hand and recheck/adjust tension.

Altitude adjustment USA only (Vehicles up to 1983)

Legal requirement
Environmental Protection Agency (EPA) defines:
– high altitude as an elevation exceeding 1219 metres (4000 ft)

New vehicles sold for principal use at high altitudes must be adjusted before being delivered to the customer. After adjustement a decal must be affixed to the firewall (beside the emissions information decal) and also to the injection pump.

The following adjustment must be made to vehicle for use at high altitudes:

Injection timing: advanced 0.07 mm (0.0028 in) for every 1000 m (3300 ft) increase in altitude.

Injected quantity decreased by 2.3 mm^3 for each 1000 metre increase in altitude. This is equivalent to turning adjustment screw 35° anticlockwise.

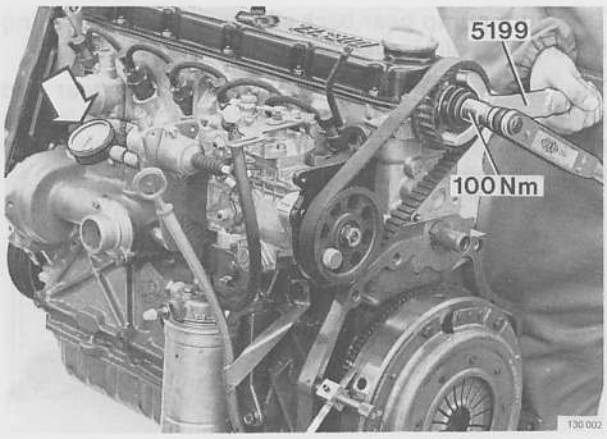

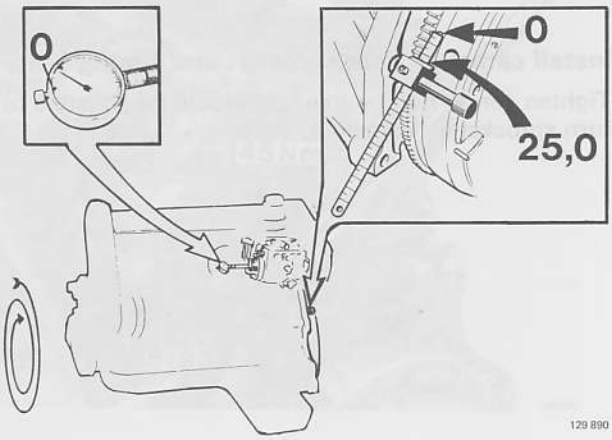

K10

Set pump and tighten camshaft rear sprocket

Check that ruler 5198 is set at 25.0 and that flywheel 'O' is flush with ruler 'O'.

Using **5199,** turn sprocket slowly clockwise until dial indicator shows:

D 20 ..... **0.80 mm** (0.0315 in)
D 24 ..... **0.70 mm** (0.0276 in)
D 24 USA and Canada
1979-1981 ..... **0.70 mm** (0.0276 in)

1982- ..... **0.85 mm** (0.0335 in)

Hold sprocket in this position and torque bolt to **100 Nm** (73 ft lbs). Take care that camshaft and sprocket do not move.

K11

Remove stop 5193 from pump gear

K12

Check pump setting

Turn engine two full turns until cyl. 1 is at TDC – injection, again. If engine is turned too far it must be turned back approx. 1/4 turn and then to zero mark otherwise setting will be incorrect.

Dial indicator should show:

D 20 ..... **0.75–0.83 mm** (0.0295–0.0327 in)
D 24 ..... **0.65–0.73 mm** (0.0256–0.0287 in)
D 24 USA and Canada 1979-1981 ..... **0.65–0.73 mm** (0.0256–0.0287 in)

1982- ..... **0.82–0.90 mm** (0.0323–0.0354 in)

Correct reading: Tighten injection pump mounting bolts. Proceed to K13.

Incorrect reading: Readjust according to instructions below.

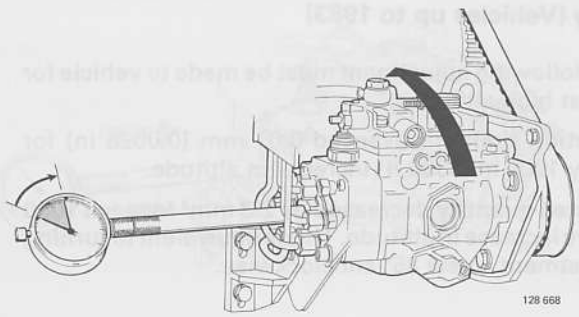

Readjusting pump setting:

D 20 ..... **0.80 mm** (0.0315 in)
D 24 ..... **0.70 mm** (0.0276 in)
D 24 USA and Canada
1979-1981 ..... **0.70 mm** (0.0276 in)

1982- ..... **0.85 mm** (0.0335 in)

Reading less than specified:

Slacken pump mounting bolts and turn pump **inwards** to obtain correct value. Tighten mounting bolts and repeat check of pump setting.

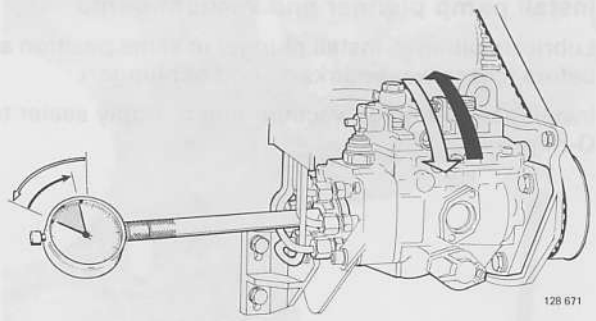

Reading more than specified:

Slacken pump mounting bolts and turn pump **outwards** until dial indicator shows **approx:**

D 20	**0.70 mm**	(0.0276 in)
D 24	**0.60 mm**	(0.0237 in)
D 24 USA and Canada 1979-		
1,3-1,61981	**0.60 mm**	(0.0237 in)
1982-	**0.75 mm**	(0.0295 in)

Then turn pump **inwards** until specified value is obtained. Tighten mounting bolts and recheck pump setting.

Important! Injection pump must not be tapped or knocked as this will alter its setting.

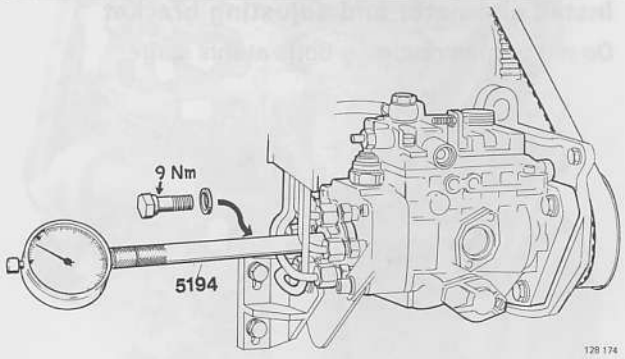

K13

Remove dial indicator and holder 5194. Install plug with new seal.

Tightening torque 9 Nm (6.5 ft lbs).

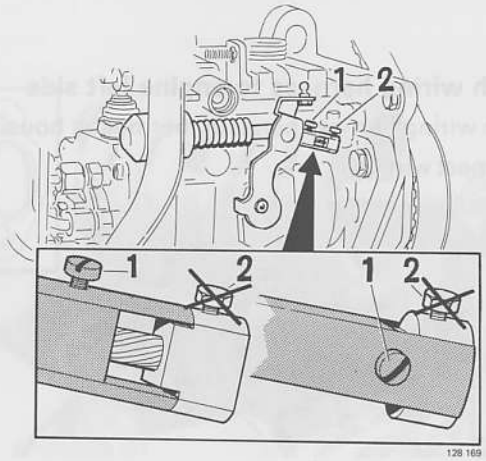

Connected Disconnected

K14

Install cold start device

Press lever forward and turn sleeve 90°. Retighten screw 1.

Note! Do not turn screw 2, otherwise it will be necessary to remove cold start device and reset it on a test bench.

K15

Remove ruler 5198 from cylinder block rear

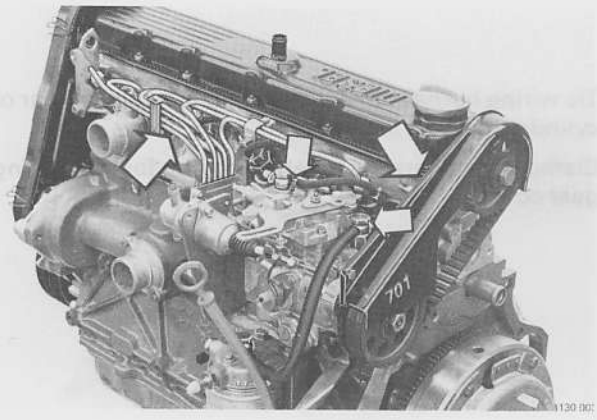

K16

Install:

- delivery pipes. Tightening torque 25 Nm (18 ft lbs)
- supply lines to pump. Tightening torque 25 Nm (18 ft lbs)
- return line from rear injector to pump.
- rear timing gear cover. (Do not install nut on pump bracket stud since wiring harness must be attached at a later stage).

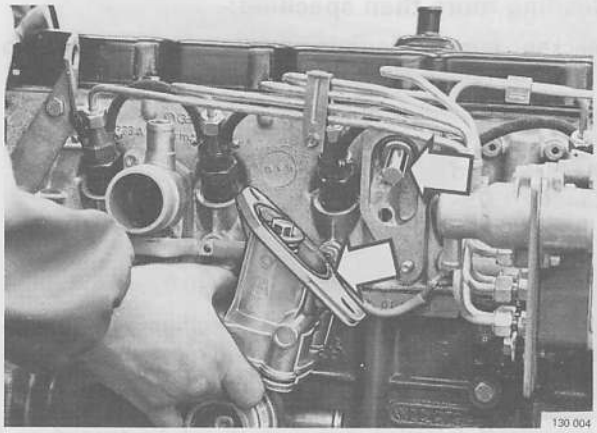

K17

Install pump plunger and vacuum pump

Lubricate plunger. Install plunger in same position as before (check wear marks on end of plunger).

Install new O-ring on vacuum pump. Apply sealer to O-ring.

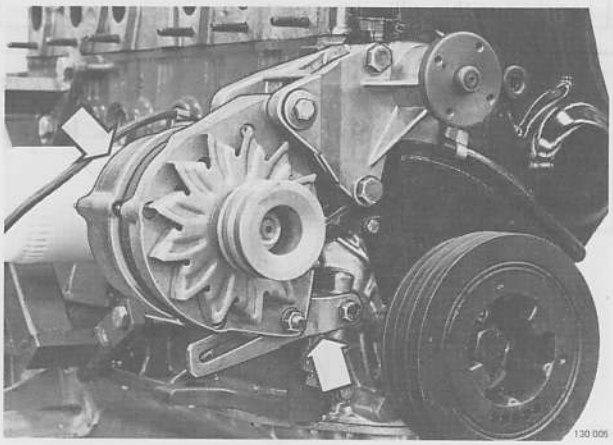

K18

Install alternator and adjusting bracket

Do not tighten retaining bolts at this stage.

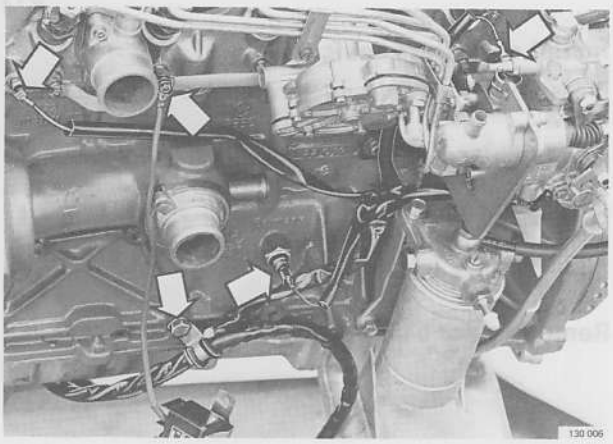

K19

Attach wiring harness to engine left side

Clamp wiring harness beneath thermostat housing.

Reconnect wiring.

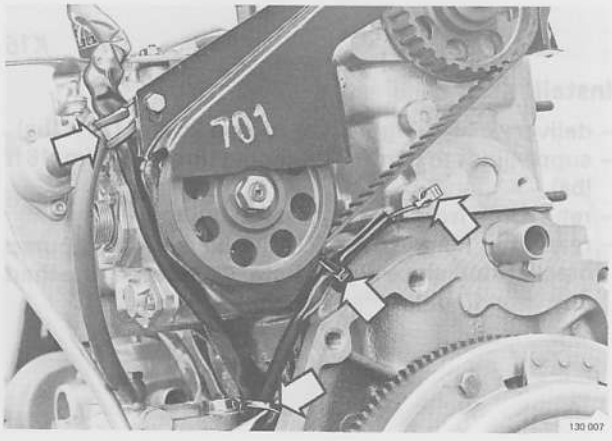

Tie wiring harness to holder for oil tube and at rear of cylinder block as illustrated.

Clamp wiring harness to retaining bolt for rear timing gear cover.

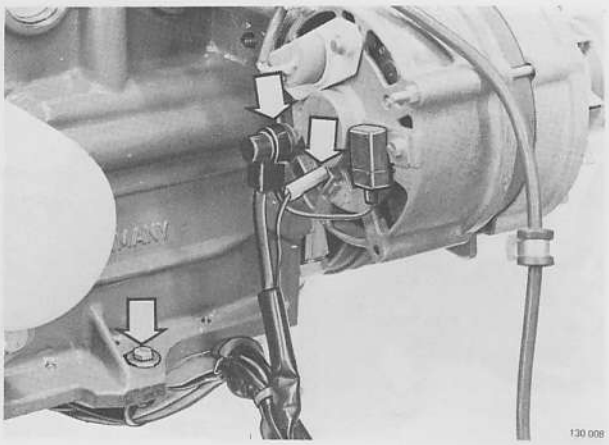

K20

Attach wiring harness to engine right side

Clamp wiring harness to lower edge of cylinder block.

Connect wires to alternator as follows:

- thick red to B+
- thin red to D+

Slide plastic cover over B+ wire.

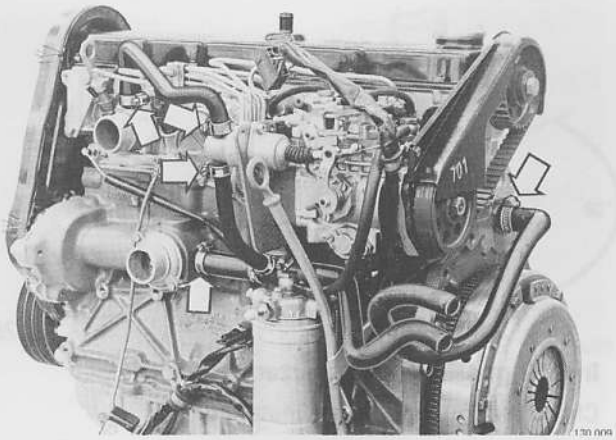

K21

Reconnect coolant hoses to:

- rear of cylinder block
- thermostat housing
- cold start device
- connector on cylinder head.

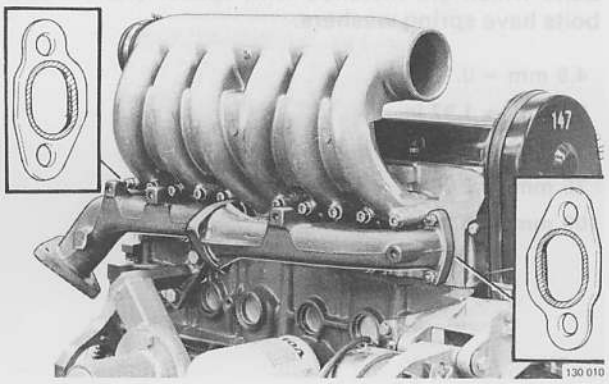

K22

Install exhaust manifold

Install new gaskets and use new nuts for exhaust manifold.

Gasket must be turned with raised edge outwards, facing manifold.

Tightening torque 25 Nm (18 ft lbs).

K23

Install intake manifold

Install new gasket. Turn gasket with green side facing cylinder head.

Apply sufficient oil to gasket so that it remains attached to cylinder head.

Tightening torque 25 Nm (18 ft lbs). Allen = 6 mm.

K24

Remove engine from stand

Lower engine to floor, but leave most of the weight on the lifting tool.

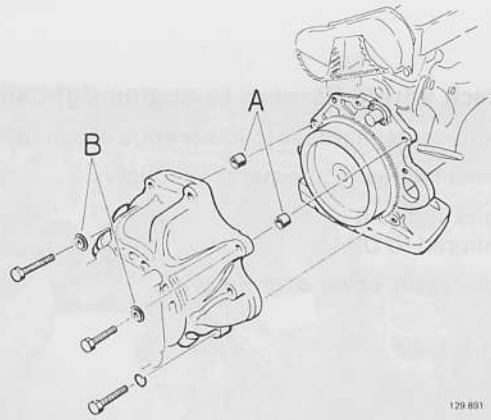

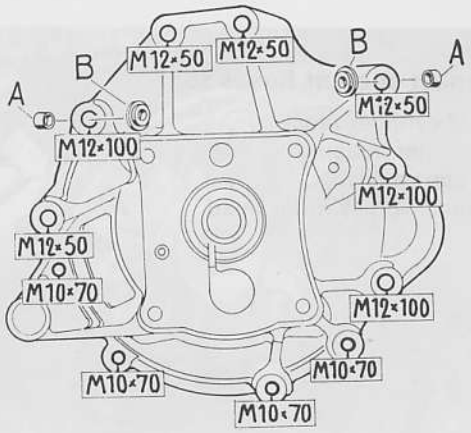

Manual gearbox

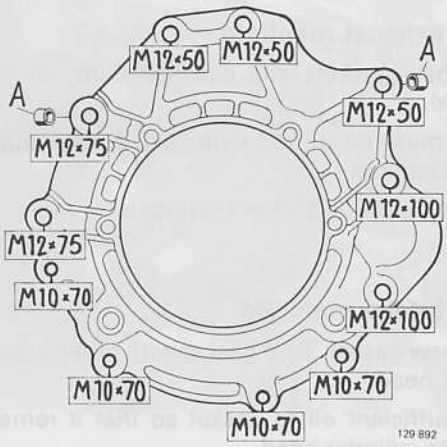

Automatic gearbox

K25

Install gearbox and starter motor

Check that guide pins are installed.

Note different bolt sizes and bolt lengths, see fig.

Manual gearbox: install washer (B = 4.5 mm thick) on bolts which are installed with spacer (A). All other bolts have spring washers.

4.5 mm = 0.18 in
50 mm = 1.97 in
70 mm = 2.75 in
75 mm = 2.95 in
100 mm = 3.94 in

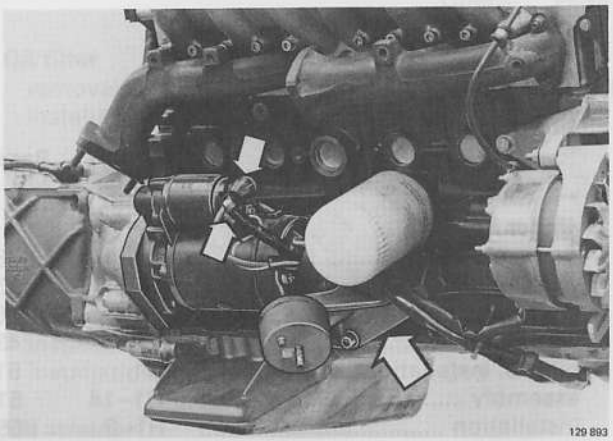

129 893

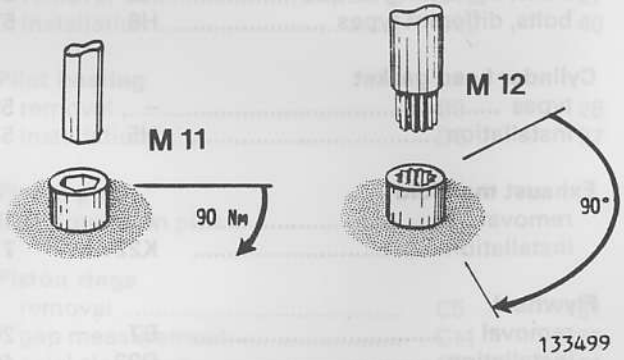

133499

K26

Reconnect wires to starter motor

Connect two thick red wires to starter motor and blue/yellow wire to solenoid.

K27

Attach right engine mount

Install engine

Refer to appropriate manual for installation procedure.

Important! Cylinder head bolts must be retorqued after the engine is warmed-up. Follow the procedure below:

1. Run engine until the oil temperature is at least 50°C/(122°F).
2. **M 11 bolts**: torque bolts to 90 Nm (66 ft lbs).

   M 12 bolts: angle-tighten bolts 90° in one movement without stopping. Do not slacken bolts first.

After driving 1000–2000 km (600–1200 miles) the cylinder head bolts must be torqued again.

Index

	Operation	Page
Altitude adjustment (USA)		67
Big end bearings		
see connecting rod bearings		
Camshaft oil seals		
installation	G11–14	54
Camshaft sprocket, front		
removal	B2	24
installation	J2	59
Camshaft sprocket, rear		
removal	B2	24
installation	K8	67
Camshaft		
removal	E1–5	43
end float	F2	46
installation	G9–13	54
oil seals	G11–14	54
Clutch		
removal	B7	26
installation	D24	40
Connecting rod bearings		
removal	B14–17	27
installation	D12–16	38
Connecting rods		
axial clearance	B13	27
removal	B16–17	28
disassembly, piston-conrod	C6	31
stud replacement	C14–15	32
bush replacement	C16–17	33
inspection	C20	34
assembly, piston-conrod	D9	37
installation	D12–18	38
Crankshaft		
removal	B18	28
inspection	C2	29
installation	D3	36
end float	D5	37
Crankshaft oil seal		
rear, removal	B8	26
installation	D7	37
front, removal	B10	26
installation	D20	39
Crankshaft pulley		
removal	B3	24
installation	J1	59
Cylinder bore	C3	29

	Operation	Page
Cylinder head		
removal	B6	25
disassembly	E1–11	43
cleaning, checking	F1	46
warp	E1	43
oil jets, installation	G1	51
assembly	G1–14	51
installation	H1–8	55
bolts, tightening torque	H8	58
bolts, different types	H6	57
Cylinder head gasket		
types	–	55
installation	H5	57
Exhaust manifold		
removal	A3	19
installation	K22	71
Flywheel		
removal	B7	26
installation	D23	40
ring gear, replacement	C21–22	34
Gudgeon pins		
removal	C6	31
fit, in piston	C10	32
fit, in conrod	C13	32
installation	D9	37
Injection pump		
removal	A12–14	22
installation, setting	K4–14	66
checking	K12	68
Injection pump belt		
removal	A12	22
installation	K8	67
tension	K9	67
Injection pump gear		
removal	A13	22
installation	K5	66
Injectors		
removal	B5	25
installation	K1	65
Intake manifold		
removal	A3	19
installation	K23	71
Main bearings		
removal	B18	28
installation	D1–4	36

	Operation	Page
Oil filter		
removal	B11	27
installation	D30	42
Oil jets (in cylinder head)		
installation	G1	51
Oil pump		
removal	B12	27
disassembly/reassembly	C23–28	34
inspection	C25	35
installation	D19	39
Oil strainer		
removal	B12	27
installation	D22	40
Pilot bearing		
removal	B9	26
installation	D6	37
Piston pins		
see gudgeon pins		
Piston rings		
removal	C5	31
gap measurement	C11	32
axial clearance	C9	31
installation	D10–11	38
Pistons		
removal	B16–17	28
disassembly, piston-conrod	C6	31
diameter	C4	30
assembly, piston-conrod	D9	37
installation	D12–17	38
lift height	H1	56
Pressure plate		
removal	B7	26
installation	D25	41
Ring gear		
replacement	C21–22	34
Sump		
removal	B12	27
installation	D22	40
Swirl chambers		
removal	E8	45
installation	G6	53
Tappets		
inspection	F4	47
installation	G8	53
Timing gear belt		
removal	B1	24
installation	J2	59
tension	J5	60
Valves		
removal	E9	45
grinding	F9–12	48
checking/grinding stem	G2	51
installation	G4–5	52
clearance	G9–17	61
types	G3	52
Valve cover gasket		
types	J19	64
Valve discs (shims)		
checking	F3	46
installation	G8	53
Valve guides		
clearance, guide-valve	F1	46
replacement	F6–8	47
oil seals, removal	E10	45
installation	G4	52
Valve seats		
grinding	F9–12	48
replacement	F13–21	49
Valve springs		
removal	E9	45
checking	F5	47
installation	G5	53
Vibration damper		
removal	A6	20
installation	J3	59

National
Institute for
AUTOMOTIVE
SERVICE
EXCELLENCE

VOLVO SUPPORTS VOLUNTARY
MECHANIC CERTIFICATION
BY THE N.I.A.S.E.

(U.S.A. only)

Service literature

Your
most important
special tool

VOLVO

TP 30224/2 US
UK/USA
6000. 05.83
PRINTED IN USA