Service Manual

Repairs and maintenance

Section 2 (21)

Reconditioning engine
B 17, B 19
B 21, B 23

240 1975–1984

VOLVO

B 17, B 19, B 21, B 23 engines

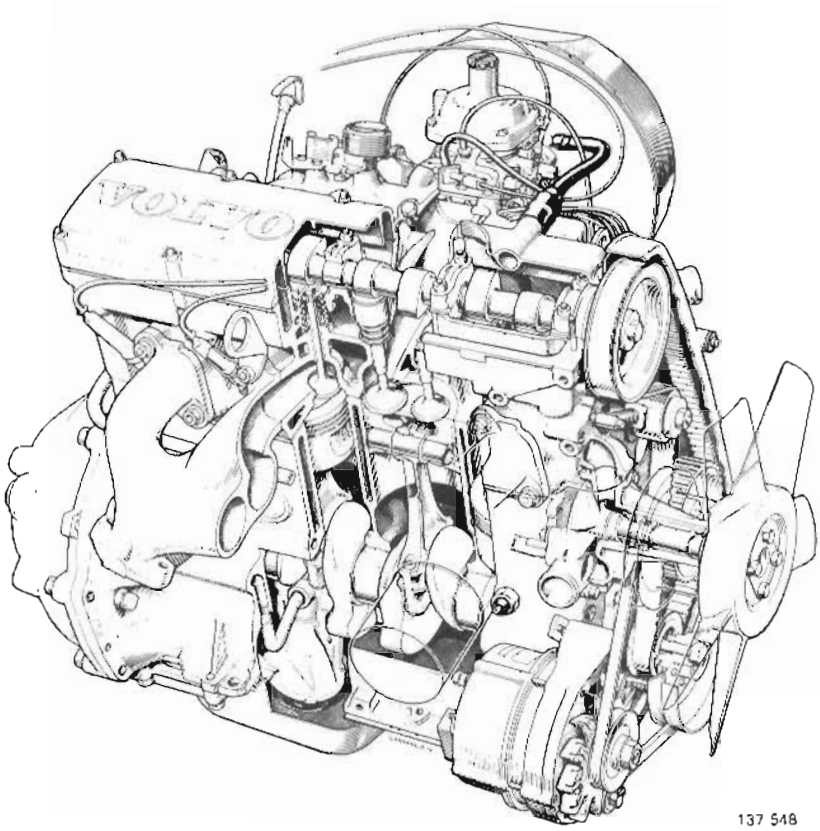

137 548

B 21 A

What do the designations mean?

B 21 E T

T = Turbo

A = carburetor engine,
K = carburetor engine
E = fuel injection engine
F = fuel injection engine – USA version

21 = cylinder capacity

B = petrol (gasoline)

B 21 = basic engine
B 23 = a B 21 with larger bore and higher compression ratio
B 19 = a B 21 with smaller bore
B 17 = a B 19 with shorter stroke

This manual covers the following engine types:

Engine type	Model year
B 17 A	1979–1984
B 19 A	1977–1984
B 19 K	1984
B 19 E	1977–1984
B 19 ET	1982–1984
B 21 A	1975–1984
B 21 E	1975–1983
B 21 ET	1981–1984
B 21 F–5[1]	1976–1984[3]
B 21 F–8[2]	1982
B 21 F–9[4]	1981–1982
B 21 FT	1981–1984
B 23 A	1981–1984
B 23 E	1979–1984
B 23 F (LH-Jetronic)	1983–1984

Remarks

[1]B 21 F–5 = CI system with Bosch ignition system.
[2]B 21 F–8 = LH Jetronic injection system.
[3]Discontinued 1982 in USA & Canada. Superseded by B 21 F–8.
[4]B 21 F–9 = CI system with Chrysler ingition.

Volvos are sold in versions adapted for different markets. These adaptations depend on many factors including legal, taxation and market requirements.

This manual may therefore show illustrations and text which do not apply to cars in your country.

Contents

		Page
Important information		2
Specifications		2
Special tools		10
	Operation	
Thread repairs	A 1–14	12
Reconditioning engine		18
Disassembly	B 1–13	19
Cleaning and inspection	C 1–33	23
Assembly	D 1–27	32
Cylinder head, reconditioning	E 1–54	39
Assembly (cont)	F 1–9	54

Index page 57

This manual deals exclusively with the overhaul of the engine.
For work carried out on the engine when fitted in the car, and for engine removal and installation, please refer to the separate manuals.

Order number: TP 30170/2
Supersedes: TP 30170/1

We reserve the right to make alterations without prior notification.

Important information

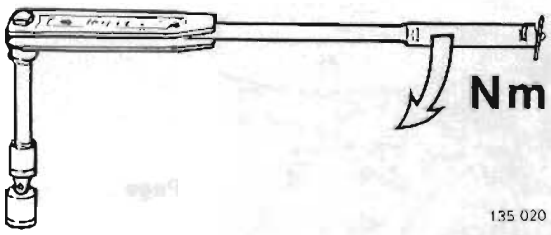

135 020

Tightening torques

Two types of tightening torques are used in this Manual:

I. Tightening torque **40 Nm** (30 ft.lbs) = a torque wrench must be used.

II. Tightening torque 40 Nm (30 ft.lbs) = correct value, however it is not necessary to use a torque wrench.

Specifications

Group 20 General

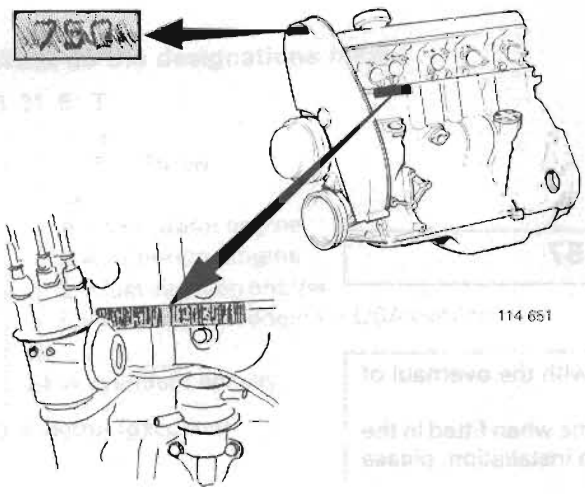

114 651

Engine type designation, serial number and part number

Stamped on a plate on left side of engine.
1977–models: additional plate on timing gear cover showing last three digits of part number.

Group 21 Engine assembly

CYLINDER HEAD

Height	New 146.1 mm(5.7563 in)
Min height after machining	145.6 mm (5.7366 in)

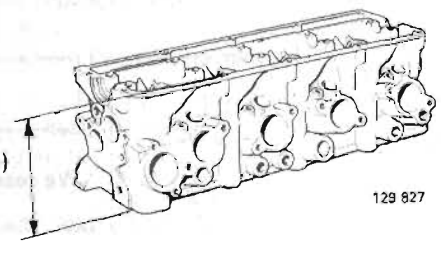

129 827

Max distortion .....

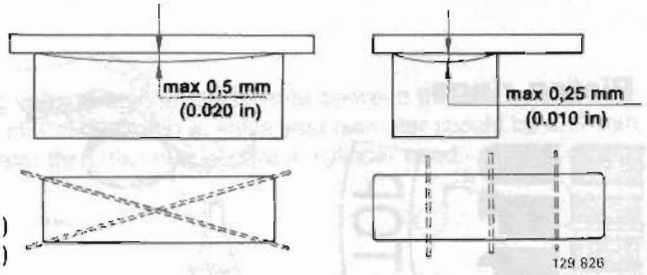

Note that if distortion is greater than 1.0 mm (0.040 in) lengthwise and 0.5 mm (0.020 in) crosswise the cylinder head must not be machined but replaced.

Thickness of gasket
new ..... 1.3 mm (0.051 in)
fitted ..... 1.2 mm (0.047 in)

CYLINDER BLOCK

Bore

		B 17, B 19	B 21	B 23
Standard (marked C)	mm	88.90–88.91	92.00–92.01	96.00–96.01
	(in)	(3.5027–3.5031)	(3.6248–3.6252)	(3.7824–3.7828)
(marked D)	mm	88.91–88.92	92.01–92.02	96.01–96.02
	(in)	(3.5031–3.5034)	(3.6252–3.6256)	(3.7828–3.7832)
(marked E)	mm	88.92–88.93	92.02–92.03	96.02–96.03
	(in)	(3.5034–3.5038)	(3.6256–3.6260)	(3.7832–3.7836)
(marked G)	mm	88.94–88.95	92.04–92.05	96.04–96.05
	(in)	(3.5042–3.5047)	(3.6264–3.6268)	(3.7840–3.7844)
Oversize 1	mm	89.29–89.30	92.5	96.3
	(in)	(3.5180–3.5184)	(3.6445)	(3.7942)
2	mm	89.67–89.68	93.0	96.6
	(in)	(3.5330–3.5334)	(3.6642)	(3.8060)

Rebore if wear exceeds 0.1 mm (0.004 in) and oil consumption is very high.

Pistons

A = Overall height
B = From gudgeon (piston) pin center to crown
C = Diameter to be measured at right angles to gudgeon pin at distance "C" from bottom of piston

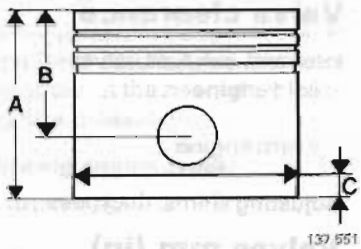

Engine type	Weight gms[1] (oz)	Dimension mm (in)		
		A	B	C
B 17 A	530±6 (18.9±0.2)	75.5 (2.975)	50.5 (1.990)	7 (0.276)
B 19 A	505±6 (18.0±0.2)	71.0 (2.797)	46.0 (1.812)	7 (0.276)
B 19 E–1983	515±6 (18.4±0.2)	71.0 (2.797)	46.0 (1.812)	7 (0.276)
1984	515±6 (18.4±0.2)	73.9 (2.912)	46.7 (1.840)	7 (0.276)
B 19 ET	510±6 (18.2±0.2)	71.0 (2.797)	46.0 (1.812)	7 (0.276)
B 19 K	515±6 (18.4±0.2)	73.9 (2.912)	46.7 (1.840)	7 (0.276)
B 21 A[2]	555±6 (19.8±0.2)	71.0 (2.797)	46.0 (1.812)	6 (0.236)
B 21 E	555±6 (19.8±0.2)	71.0 (2.797)	46.0 (1.812)	6 (0.236)
B 21 ET	535±6 (19.1±0.2)	71.5 (2.817)	46.5 (1.832)	7 (0.276)
B 21 F	555±6 (19.8±0.2)	71.5 (2.817)	46.5 (1.832)	7 (0.276)
B 21 FT	535±6 (19.1±0.2)	71.5 (2.817)	46.5 (1.832)	7 (0.276)
B 23 A	570±7 (20.4±0.3)	76.4 (3.010)	46.4 (1.828)	8 (0.315)
B 23 E type 1	555±6 (19.8±0.2)	80.4 (3.168)	46.4 (1.828)	15 (0.591)
type 2	570±7 (20.4±.03)	76.4 (3.010)	46.4 (1.828)	8 (0.315)
B 23 F[3]	570±7 (20.4±.03)	76.4 (3.010)	46.4 (1.828)	8 (0.315)

[1] Max weight difference in same engine = 12 gms (0.43 oz)
[2] Europe 1984– (excl Switzerland, Scandinavia) models have high compression pistons, A=71.7 mm (2.82 in); B=46.7 mm (1.84 in); C=7 mm (0.28 in)
[3] Pistons dished on engine numbers 499846, 499890

Piston running clearance mm (in)

B 17 A, B 19 A/E/K, B 21 A/E/F	0.01–0.04	(0.0004–0.0016)
B 19 ET	0.03–0.06	(0.0012–0.0024)
B 21 ET & FT	0.02–0.04	(0.0008–0.0016)
B 23 A	0.01–0.04	(0.0004–0.0016)
B 23 E type 1	0.05–0.07	(0.0020–0.0028)
type 2	0.01–0.04	(0.0004–0.0016)
B 23 F	0.01–0.04	(0.0004–0.0016)

Piston rings





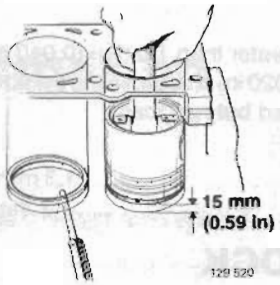

Measure gap 15 mm (0.59 in) from lower edge

		Upper comp.rings	Lower comp.rings	Oil scraper rings
Piston height, type 1	mm	1.978–1.990	1.978–1.990	4.74
	(in)	(0.0779–0.0783)	(0.0779–0.0783)	(0.1866)
type 2	mm	1.728–1.740	1.978–1.990	3.978–3.990
	(in)	(0.0681–0.0685)	(0.0779–0.0783)	(0.1566–0.1571)
Clearance in piston groove	mm	0.040–0.072	0.040–0.072	0.030–0.062
	(in)	(0.0016–0.0028)	(0.0016–0.0028)	(0.0012–0.0024)
Ring gap (see above fig)	mm	0.35–0.65	0.35–0.55	0.25–0.60
	(in)	(0.014–0.026)	(0.014–0.022)	(0.010–0.024)

Gudgeon (piston) pins

Fit, in connecting rod	Light thumb pressure (close running fit)
in piston	Thumb pressure (push fit)
Diameter, standard	mm (in) 24.00 (0.945)
oversize	mm (in) 24.05 (0.947)

VALVES

Valve clearance

	Checking	Adjusting
Inlet and exhaust valves cold engine	0.30–0.40 mm (0.012–0.016 in)	0.35–0.40 mm (0.014–0.016 in)
warm engine	0.35–0.45 mm (0.014–0.018 in)	0.40–0.45 mm (0.016–0.018 in)
Adjusting shims, thickness	3.30–4.50 mm (0.1300–0.1773 in) in increments of 0.05 mm (0.002 in)	

Valves mm (in)

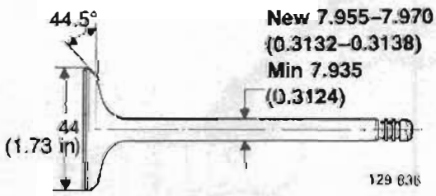

Inlet valve

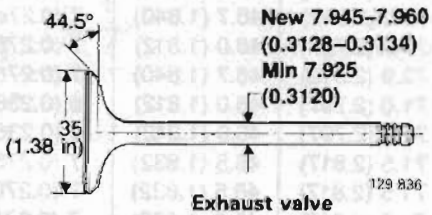

Exhaust valve
A, E, F-engines

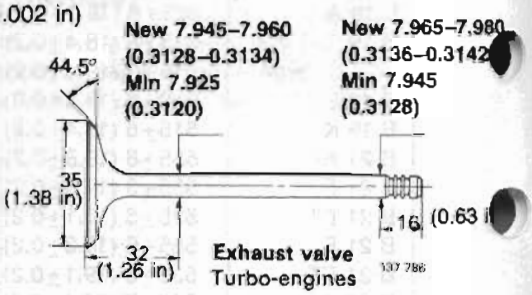

Exhaust valve
Turbo-engines

Valve seats

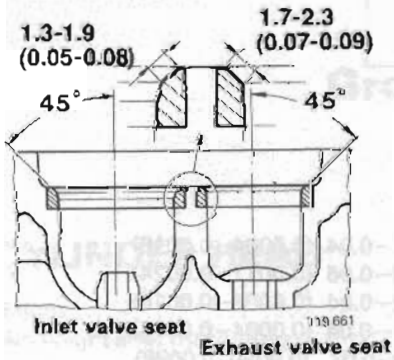

Inlet valve seat

Exhaust valve seat

Turbo: exhaust valves are Stellite-coated and must not be machined to obtain new surface. They can however be ground-in with paste against seat.

Valve seat diameter		Inlet	Exhaust
standard	mm	46.00	38.00
	(in)	(1.8124)	(1.4972)
oversize 1	mm	46.25	38.25
	(in)	(1.8223)	(1.5071)
2	mm	46.50	38.50
	(in)	(1.8321)	(1.5169)

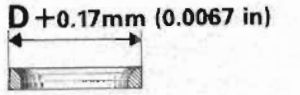

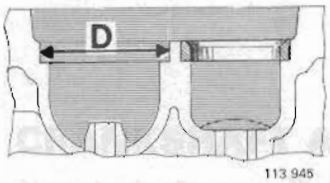

When replacing valve seats the interference between the seat and its bore should be 0.17 mm (0.0067 in) i.e. valve seat diameter should be 0.17 mm (0.0067 in) greater than diameter of bore in cylinder head.

Valve guides mm (in)

		Inlet valve	Exhaust valve
Length	mm	52	52
	(in)	(2.0488)	(2.0488)
Inner diameter	mm	8.000–8.022	8.000–8.022
	(in)	(0.3152–0.3161)	(0.3152–0.3161)
Height above upper face of cylinder head	mm	15.4–15.6	17.9–18.1
	(in)	(0.6068–0.6146)	(0.7053–0.7131)
Clearance, valve stem – guide (measured with new valve)		0.030–0.060	0.060–0.090
new	mm	0.030–0.060	0.060–0.090
	(in)	(0.0012–0.0021)	(0.0024–0.0035)
max.	mm	0.15	0.15
	(in)	(0.0059)	(0.0059)



Valve guides are available in three oversizes, marked with grooves.

	Marking	Reamer for seat
Standard	No groove	–
Oversize 1	1 groove	5161
2	2 groove	5162
3	3 groove	5163

Note. The force used when pressing in valve guides must be at least **9000 N** (900 kp). If the pressing force used is lower, then the recess for the guide must be reamed out to the nearest oversize and a guide of the corresponding size pressed in.

Valve springs mm (in)

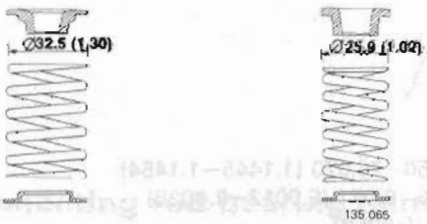

Type 1 Type 2

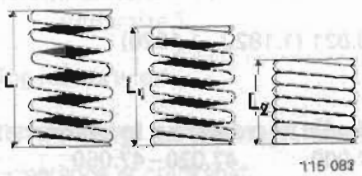

Type 2 springs are fitted on following engine types:

- B 21 F LH-Jetronic, late types (from 1983–
- B 23 F
- B 19 ET, B 21 ET & B 21 FT late type (from 1984–).

Type 1 springs are fitted on all other engines types.

Type 1		Type 2	
Length	Load N (lb)	Length	Load N (lb)
45.0 (1.77)	0	45.5 (1.79)	0
38.0 (1.50)	280–320 (62–70)	3.80 (1.50)	280–320 (62–70)
27.0 (1.06)	710–790 (156-174)	27.5 (1.08)	702–782 (154-172)

Tappets mm (in)

Diameter	36.975–36.995 (1.4568–1.4576)
Height	30–31 (1.182–1.221)
Clearance, adjusting shim to cylinder head	0.009–0.064 (0.0004–0.0025)
adjusting shim to tappet	0.030–0.075 (0.0012–0.0030)

Adjusting shims mm (in)

Thickness	3.30–4.50 (in increments of 0.05) (0.1300–0.1773) (in increments of 0.0020)
Diameter	32.980–33.0 (1.2994–1.3002)

TIMING GEARS

Camshaft mm (in)

Engine type	Profile
B 17 A, B 19 A	A
B 19 K	L
B 19 E 1977–1983	D
1984	A
B 19 ET	T
B 21 A 1975–1983	A
1984 CH, Scandinavia	A
Australia, Other markets	L
B 21 E	D
B 21 ET	T
B 21 F-5	B
B 21 F-8	M
B 21 F-9	L
B 21 FT	T
B 23 A	A
B 23 E 1979–1980	H
1981–1982	K
1983 Canada	A
Other markets	K
1984	A
B 23 F	M

Camshaft max lift height mm (in)	Check values (cold engine) Valve clearance No. 1 intake valve	Intake valve should open at:
A/10.5[1] (0.4137)	0.7 (0.0276)	13° B.T.D.C.[1)]
B/10.6 (0.4176)	0.7 (0.0276)	19° B.T.D.C.
D/11.2 (0.4413)	0.7 (0.0276)	15° B.T.D.C.
H/12.0 (0.4728)	0.5 (0.0197)	28° B.T.D.C.
K/11.95 (0.4708)	0.5 (0.0197)	22.6° B.T.D.C.
L/9.8 (0.3861)	0.7 (0.0276)	10° B.T.D.C.
M/9.5 inlet	0.7 (0.0276)	3° A.T.D.C.
10.5 exhaust	0.7 (0.0276)	48° B.T.D.C.
T/9.9 (0.3901)	0.5 (0.0197)	11° B.T.D.C.

[1]1975 early types: 9.8 mm, 5° B.T.D.C.

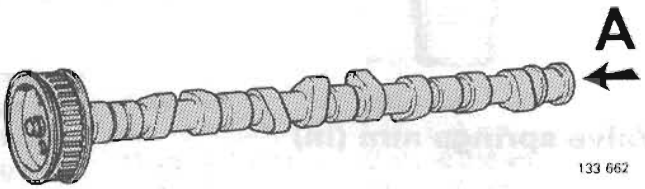

Bearing journal, diameter	29.050–29.070 (1.1445–1.1454)
Radial clearance, new	0.030–0.071 (0.0012–0.0028)
max.	0.15 (0.0059)
Axial clearance	0.1–0.4 (0.0344–0.0158)

Camshaft bearings mm (in)

Bearing diameter	30.000–30.021 (1.1820–1.1828)

Intermediate shaft mm (in)

	Bearing journal	Bearing in cylinder
Diameter, front	46.975–47.000	47.020–47.050
	(1.8508–1.8518)	(1.8526–1.8538)
center	43.025–43.050	43.070–43.100
	(1.6952–1.6962)	1.6970–1.6981)
rear	42.925–42.950	42.970–43.000
	(1.6912–1.6922)	(1.6930–1.6942)

Radial clearance	0.020–0.075 (0.0008–0.0030)
Axial clearance	0.20–0.46 (0.0079–0.0181)

CRANKSHAFT ASSEMBLY

Crankshaft mm (in)

Max. out-of-true	0.05 (0.0020)
Crankshaft, axial clearance, max.	0.25 (0.0098)
radial clearance (main bearings)	0.028–0.083 (0.0011–0.0033)
Big-end bearings, axial clearance	0.15–0.35 (0.0059–0.0138)
radial clearance	0.024–0.070 (0.0009–0.0028)

Main bearing journals mm (in)

Out-of round, max.	0.07 (0.0028)
Taper, max.	0.05 (0.0020)
Diameter, standard	63.451–63.464 (2.5000–2.5005)
undersize 1	63.197–63.210 (2.4900–2.4905)
2	62.943–62.956 (2.4800–2.4805)
Width on crankshaft for flange bearing shell,	
standard	38.960–39.000 (1.5350–1.5366)
oversize 1	39.061–39.101 (1.5390–1.5406)
2	39.163–39.203 (1.5430–1.5446)

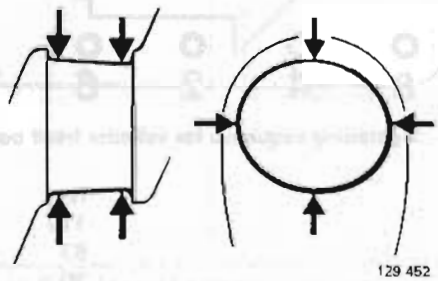

Taper Out-of-round

Connecting rod bearing journals mm (in)

Out-of-round max.	0.05 (0.020)
Taper, max.	0.05 (0.020)
Diameter, standard	53.987–54.000 (2.1271–2.1276)
undersize 1	53.733–53.746 (2.1171–2.1176)
2	53.479–53.492 (2.1071–2.1076)
Bearing recess width	29.95–30.05 (1.1800–1.1840)

Connecting rods mm (in)

Axial clearance at crankshaft	0.15–0.35 (0.0059–0.0138)
Length, centre–centre	145±0.1 (5.713±0.0039)
Max. weight deviation between connecting rods in same engine	10 gms

Flywheel mm (in)

Axial throw, max	0.05 mm/150 mm diameter (0.0020 in/5.91 in diameter)

TIGHTENING TORQUES

The tightening torques apply to oiled screws, bolts and nuts. Degreased (washed) parts must be oiled before use.

Cylinder head, tightening sequence data

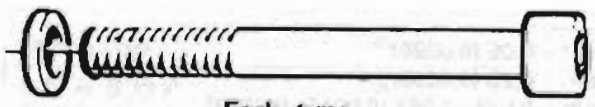

Early type

1 = **60 Nm** (43 ft.lbs)
2 = **110 Nm** (80 ft.lbs)
3 = Run warm. Then allow engine to cool off for about 30 minutes.
4 = Slacken bolt 1 approx. 30°. Then tighten to a torque of **110 Nm** (80 ft.lbs) (The bolt must be slackened first to break the resting stress, otherwise false tightening torque will result.
5 = Tighten other bolts in sequence, see step 4.

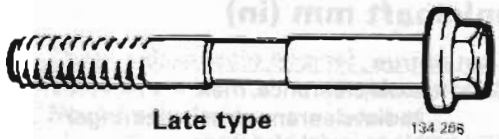

Late type

134 286

1 = **20 Nm** (14 ft.lbs)
2 = **60 Nm** (43 ft.lbs)
3 = Angle-tighten **90°**.

Bolts should be replaced if center section shows signs of extension. Do not re-use bolts more than 5 times.

If in doubt, fit new bolts.

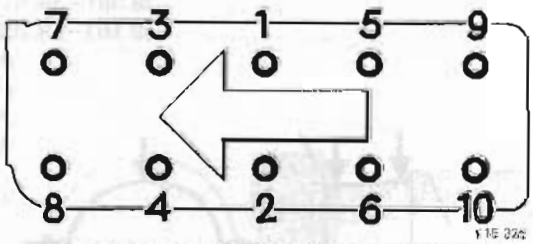

Tightening sequence for cylinder head bolts

	Nm	(ft.lbs)
Main bearings	110	80
Connecting rod bearings, old bolts	63	46
new bolts	70	51
Flywheel (use new bolts)	70	51
Spark plugs (**not** to be oiled)	20–30	14–22
Camshaft gear	50	36
Intermediate shaft gear	50	36
Camshaft cap	20	14
Crankshaft, centre bolt pulley	165	119

Group 22 Lubricating system

General data

Oil capacity, excl oil filter	3.35 l (3.5 US qt)
incl oil filter	3.85 l (4.0 US qt)
Max–Min	1.0 l (1.1 US qt)

Turbo-engines: add 0.6 l (0.7 US qt) to above if oil cooler is drained.

Oil pressure at 33 r/s (2000 r/min), warm engine and new oil filter	0.25–0.60 MPa 35.6–85.3 psi

Petrol/Gasoline engines

USA, Canada and Japan

Quality

According to API ..... min SF*

*oils with designations SF/CC and SF/CD meet this requirement.

Viscosity (stable ambient temperatures)

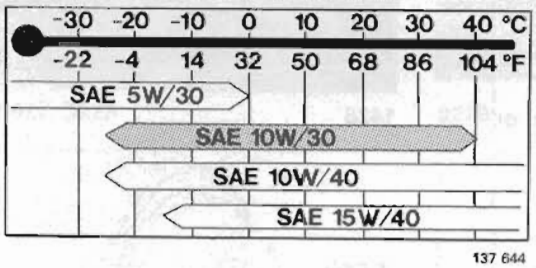

137 644

Other markets

Quality

According to API – 1983 ..... min SE*
1984 ..... min SF**

*oils with designations SE, SF, SE/CC, SF/CC and SF/CD meet this requirement. Note that **SE/CD oil must not be used.**
**oils with designations SF/CC and SF/CD meet this requirement.

Viscosity (stable ambient temperatures)

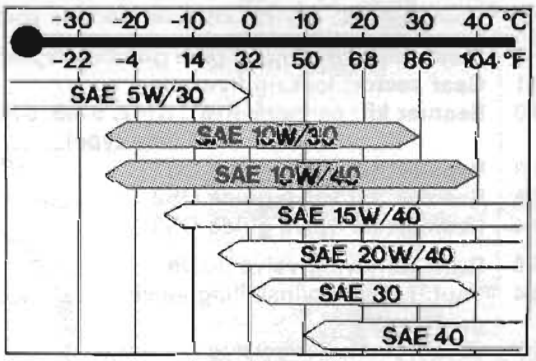

137 642

Note: USA, Canada & Japan SAE 15W/40 engine oil is recommended for use in extreme driving conditions which involve high oil consumption eg. mountain driving with frequent deceleration or fast motorway driving.
Other markets: SAE 15W/40 and SAE 20W/40 oils are recommended.
Note however the lower temperature limits.

Oil pump

Axial clearance	0.02–0.12 mm	(0.0008–0.0047)
Radial clearance (excluding bearing clearance)	0.02–0.09 mm	(0.0008–0.0035)
Backlash (excluding bearing clerarance)	0.15–0.35 mm	(0.0059–0.0138)
Bearing clearance, drive shaft	0.032–0.070 mm	(0.0013–0.028)
idling shaft	0.014–0.043 mm	(0.0006–0.0017)

Relief valve spring length under different loads

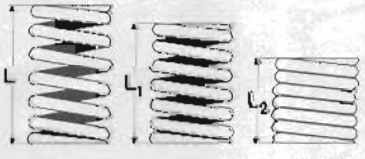

115 083

Length	Load
39.2 mm (1.5445 in)	0
26.25 mm (1.0343 in)	46–54 N (10.1–11.9 lb.)
21.0 mm (0.8274 in)	62–78 N (13.6–17.2 lb.)

Special tools

999	Description – use
1426-6	**Drift**: installing pilot bearing
2484-7	**Centering drift**: installing clutch plate (early gearbox types)
2520-8	**Stand**: Used with fixture 5023
4090-0	**Extractor**: pilot bearing
5017-2	**Drift**: installing/removing connecting rod bushing
5021-4	**Press tool**: installing/removing camshaft
5022-2	**Press tool**: adjusting valves
5023-0	**Fixture**: used with stand 2520
5024-8	**Sleeve**: installing crankshaft front seal
5025-5	**Sleeve**: installing camshaft and intermediate shaft seals
5026-3	**Pliers**: removing valve tappets
5027-1	**Drift**: installing intake valve guides
5028-9	**Drift**: installing exhaust valve guides
5029-7	**Drift**: installing intake valve seats
5034-7	**Counterhold**: crankshaft, intermediate shaft, camshaft
5111-3	**Centering drift**: clutch (late gearbox types)
5112-1	**Gear sector**: locking flywheel
5160-0	**Reamer kit**: contains 5161, 5162, 5163, 5164 (early type) or 5224 (late type)
5161-8	**Reamer**: for valve guide OS1
5162-6	**Reamer**: for valve guide OS2
5163-4	**Reamer**: for valve guide OS3
5218-6	**Drift**: removing valve guide
5219-4	**Tool**: removing/installing valve guide seals
5220-2	**Drift**: for checking valve
5222-8	**Gauge**: for checking valve stem length
5224-4	**Reamer**: inside (replaces 5164)
5276-4	**Press tool**: installing crankshaft rear seal

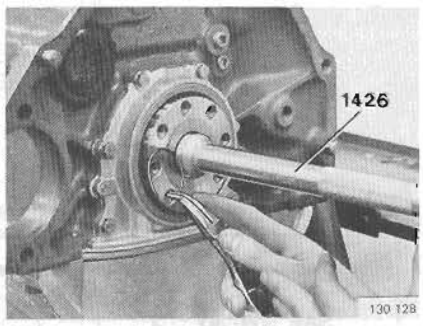

1426

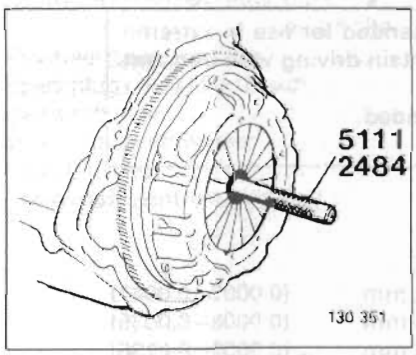

2484

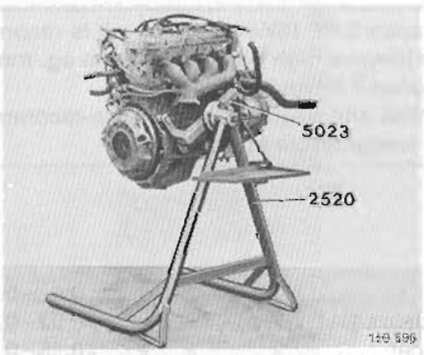

2520

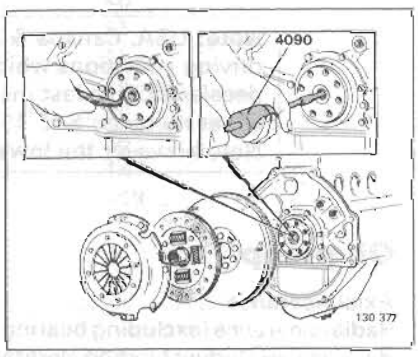

4090

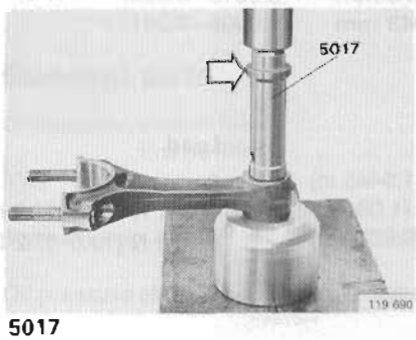

5017

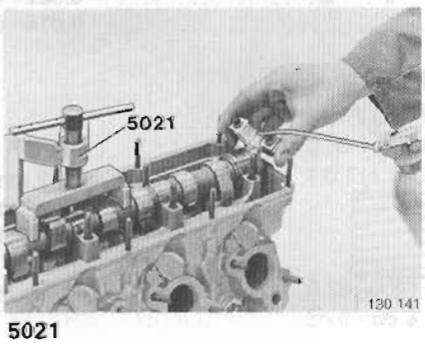

5021

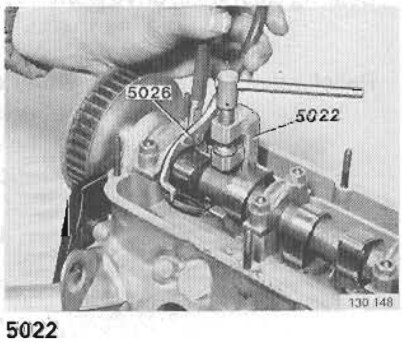

5022

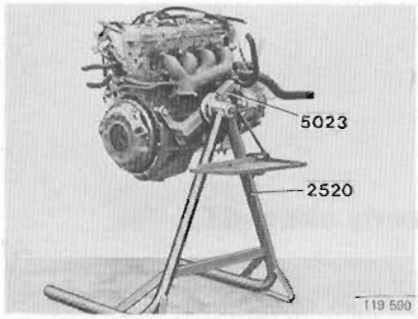

5023

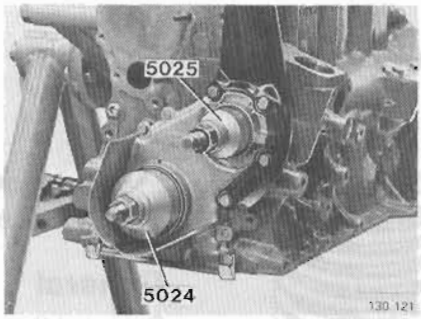

5024, 5025

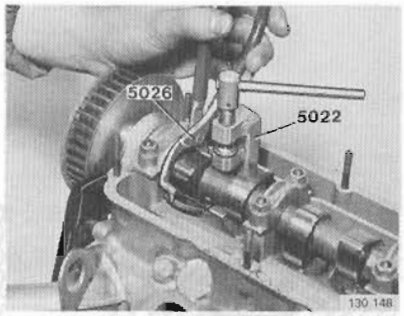

5026

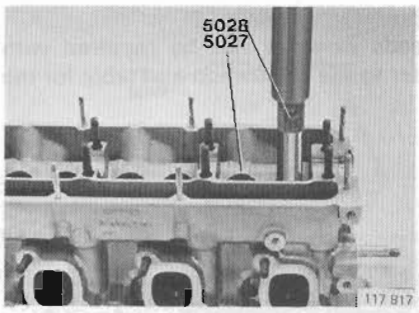

5027, 5028

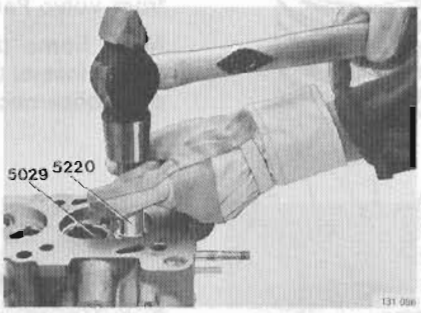

5029

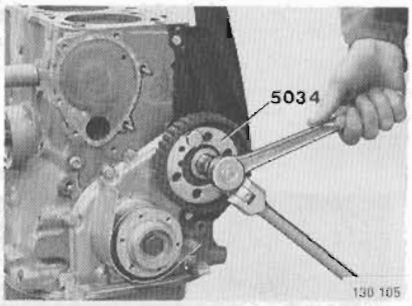

5034

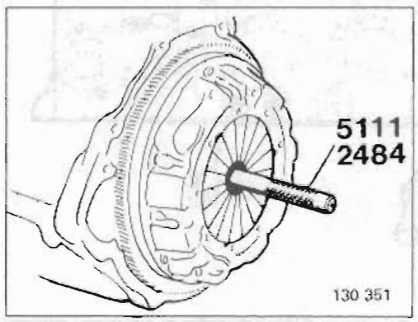

5111

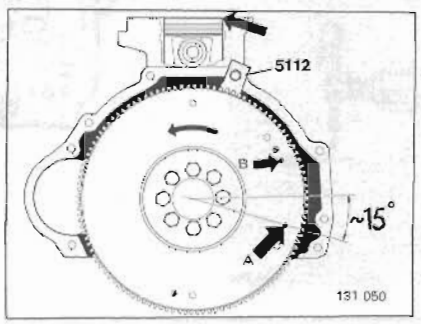

5112

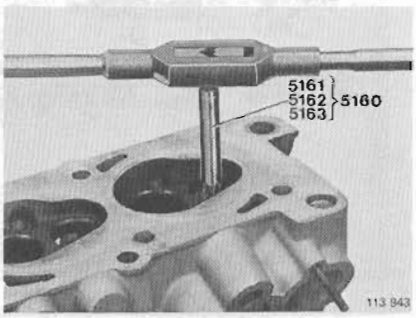

5160, 5161, 5162, 5163

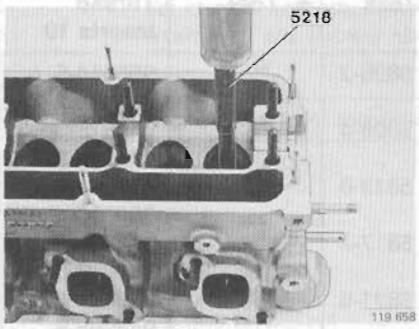

5218

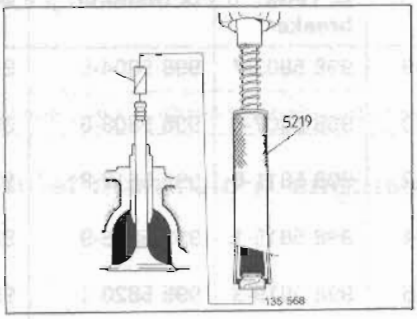

5219

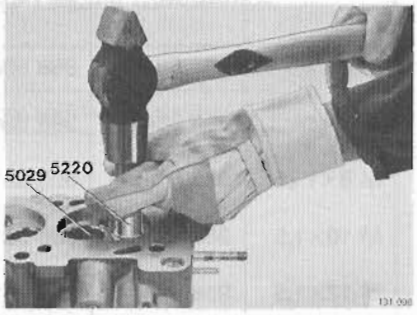

5220

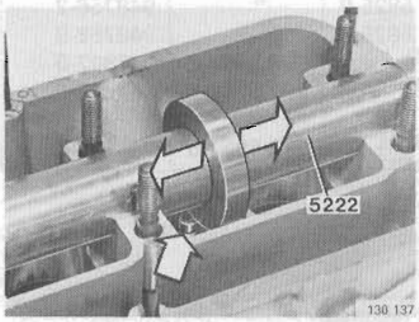

5222

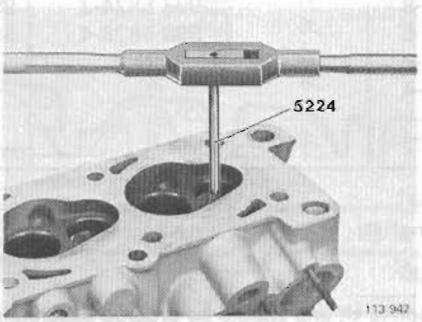

5224

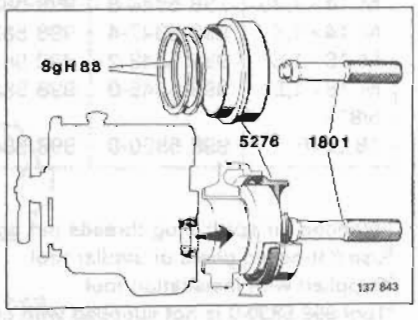

5276

A. Thread repairs

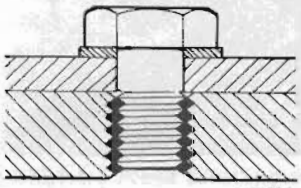

113 294

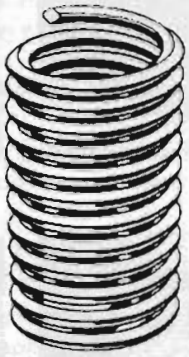

113 293

A1

General

Damaged threads can usually be repaired with thread inserts. Thread inserts and installation tool are available from Volvo Parts.

Note. Some threads can/may not be repaired with thread inserts (refer to the illustration and table for the part concerned)

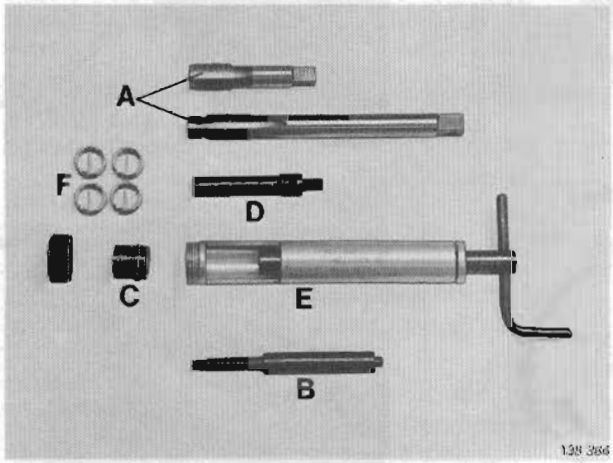

138 366

A2

Installation tool

Complete set or separate parts can be ordered from Volvo Parts.

Thread	Complete Kit, No.	Supplied with kit					
		A. Tap	B. Tang breaker	C. Mandrel	D. Crank	E. Tool	Thread inserts 10
M 6×1	998 5840-9	998 5802-9	998 5803-7	998 5804-5	998 5805-2	4)	956014-5 + 956015-2
M 7×1	998 5841-7	998 5806-0	998 5807-8	998 5808-6	998 5809-4	4)	948015-3 + 941843-5
M 8×1,25	998 5842-5	998 5810-2	998 5811-0	998 5812-8	998 5813-6	4)	956018-6 + 956019-4
M 10×1,5	998 5843-3	998 5814-4	998 5815-1	998 5816-9	998 5817-7	4)	956022-8 + 956023-6
M 12×1,5	998 5844-1	998 5818-5	998 5819-3	998 5820-1	998 5821-9	4)	948094-8 + 948095-5
M 14×1,25	998 5845-8[1]	998 5823-5	2)	998 5824-3	998 5825-0	4)	948756-2
M 14×1,25	998 5846-6	998 5826-8	2)	998 5824-3	998 5825-0	4)	948756-2
M 14×1,5	998 5847-4	998 5827-6	2)	998 5828-4	998 5829-2	4)	948758-8
M 16×1,5	998 5848-2	998 5831-8	2)	3)	3)	998 5832-6	947847-0
M 18×1,5	998 5849-0	998 5833-4	2)	3)	3)	998 5834-2	947843-9
5/8"–18 UNF	998 5850-8	998 5860-7	2)	3)	3)	998 5861-5	948755-4

[1]Intended for spark plug threads (no drilling)
[2]Use flat-nosed pliers or similar tool
[3]Supplied with installation tool
[4]Tool 998 5830-0 is not supplied with complete kit and should be ordered separately if required.

Do not repair these threads
(Threads shown below cannot or must not be repaired)

A3

Cylinder head

Inlet manifold

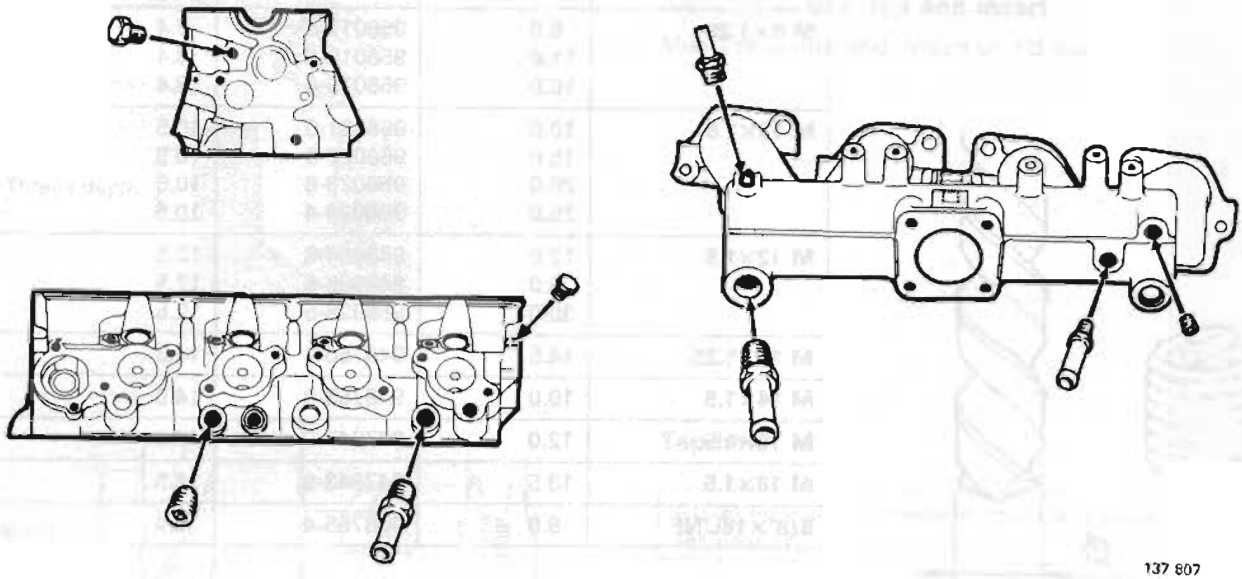

137 807

All conical threads such as plugs and nipples in inlet manifold on all engine types. A few examples are shown above.

Later type inlet manifolds have a few unthreaded holes intended for self-tapping screws.

Inlet manifold A-engines

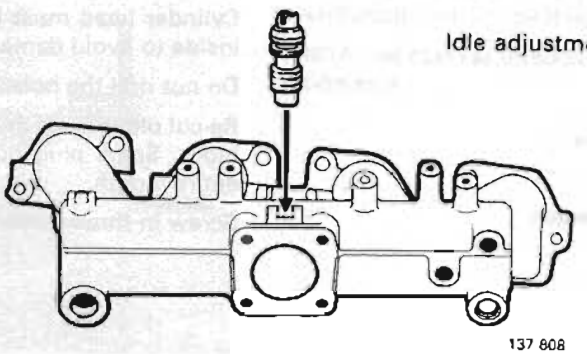

137 808

Thread repair insert, drill diameter

A4

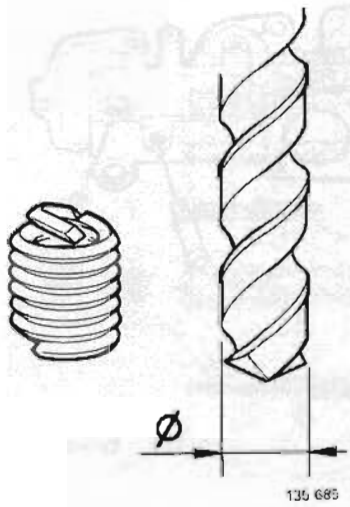

Thread	Length mm	P/N	Drill dia mm
M 6×1	9.0 12.0	956014-5 956015-2	6.3 6.3
M 7×1	10.5 14.0	948015-3 941843-5	7.3 7.3
M 8×1.25	8.0 11.4 16.0	956017-8 956018-6 956019-4	8.4 8.4 8.4
M 10×1.5	10.0 15.0 20.0 25.0	956021-0 956022-8 956023-6 956024-4	10.5 10.5 10.5 10.5
M 12×1.5	12.0 24.0 30.0	948094-8 948095-5 956028-5	12.5 12.5 12.5
M 14×1.25	14.5	948756-2	14.3
M 14×1.5	10.0	948758-8	14.5
M 16×1.5	12.0	947847-0	16.5
M 18×1.5	13.5	947843-9	18.5
5/8"×18UNF	8.0	948755-4	16.4

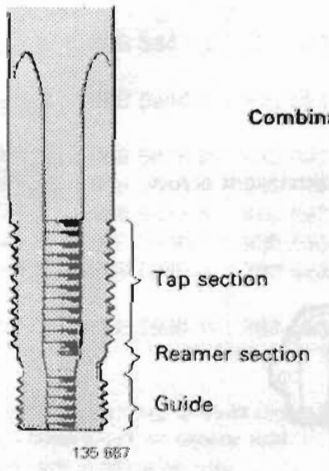

A5

Repairing spark plug threads

Cylinder head must be removed first. Tap hole from inside to avoid damaging seat for spark plug.

Do not drill the hole. Use tap 998 5823-5.

Re-cut old threads only. Do not cut further into cylinder block. Spark plug bore must not be threaded along entire length.

Screw in thread insert (P/N 948756-2).

Installing thread inserts

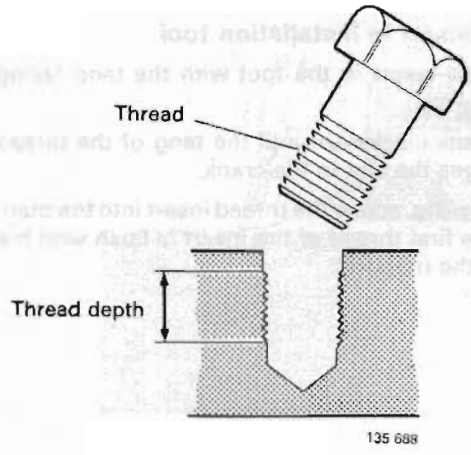

A6

Select drill size, tap and insert

Measure length and thread of old hole.

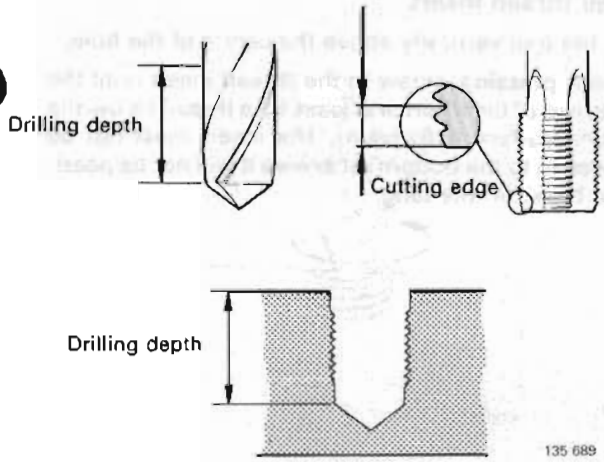

A7

Tap hole

NOTE! Special instructions for spark plug holes, see page 14.

Measure depth of hole. Drill out hole to this depth.

Cut the screw thread to such a depth that the thread insert makes contact with fully cut screw thread along its entire length.

Clean the hole.

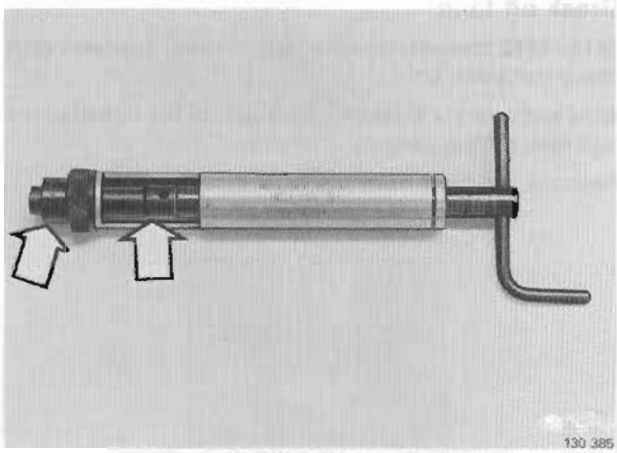

A8

Assemble installation tool

M6–M14 threads: fit correct mandrel and crank in installation tool 998 5830-0.

M16 and coarser threads: use the appropriate installation tool.

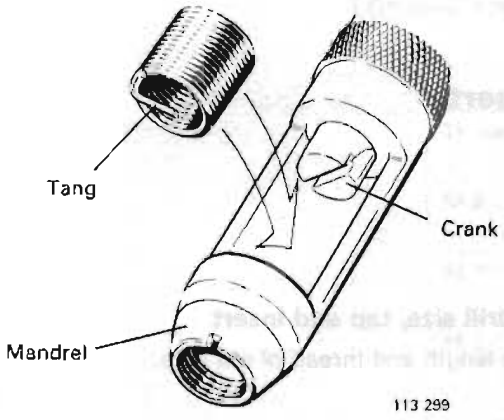

A9

Fit thread insert in installation tool

Fit the thread insert in the tool with the tang facing downwards.

Turn the crank clockwise until the tang of the thread insert engages the slot in the crank.

Without pressing, screw the thread insert into the mandrel until the first thread of the insert is flush with the opening of the mandrel.

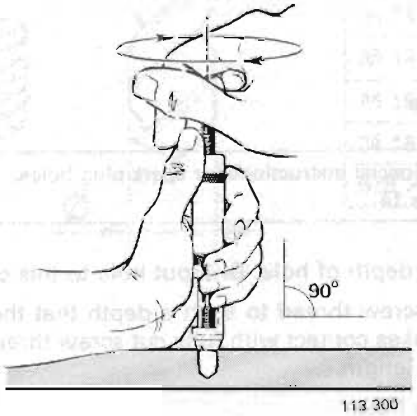

A10

Install thread insert

Hold the tool vertically above the centre of the hole.

Without pressing, screw in the thread insert until the top thread of the insert is at least 1/2 a thread below the working surface (0.5×pitch). The insert must not be screwed in to the bottom otherwise it will not be possible to break off the tang.

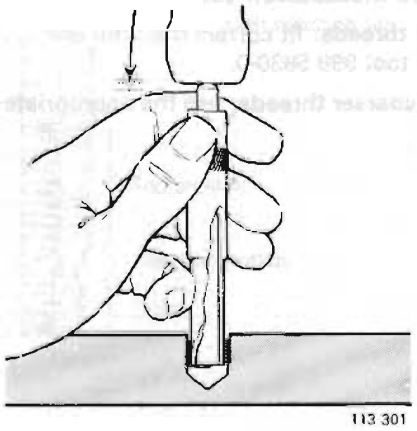

A11

Break off tang

M16–M12 threads: use the tang breaker supplied with the installation kit.

M14 and coarser threads: use a pair of flat nosed pliers to break off the tang downwards.

Remove the tang from the hole.

Removing thread repairs inserts

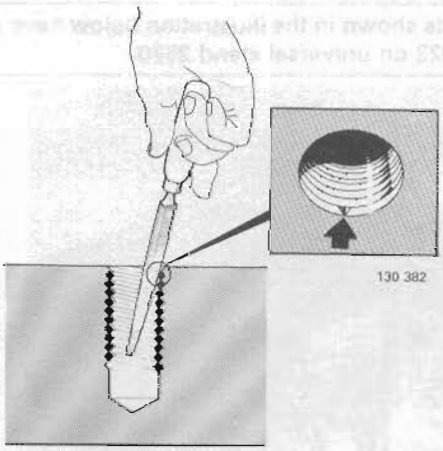

A12

File groove in thread insert

Using a triangular file make a groove in the top thread of the insert, approx. 1/4 of a thread from the end. Take care not to damage the thread holding the insert.

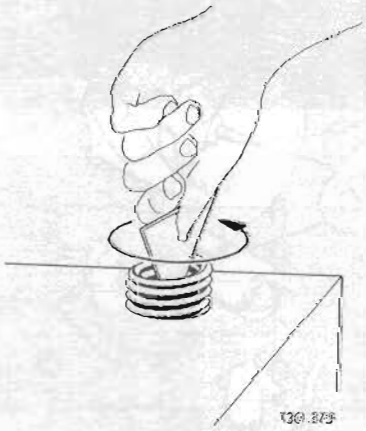

A13

Remove thread insert

Insert a sharp edge of a triangular scraper in the groove. Press downwards and rotate anti-clockwise until the insert is removed.

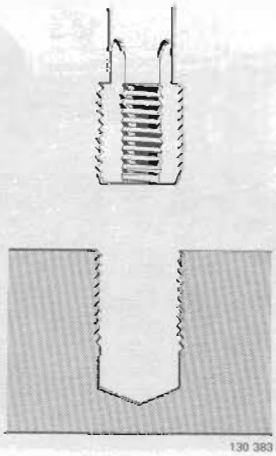

A14

Fit new thread insert

Clean the hole with a tap and fit a new insert.

Reconditioning engine

Special tools: 1426, 2484, 2520, 4090, 5017, 5021, 5022, 5023, 5024, 5025, 5026, 5027, 5028, 5029, 5034, 5111, 5112, 5160, 5161, 5162, 5163, 5218, 5219, 5220, 5222, 5224, 5276.

For the overhaul of the engine it is presumed that the components shown in the illustration below have already been removed. Also that the engine is mounted with support 5023 on universal stand 2520.

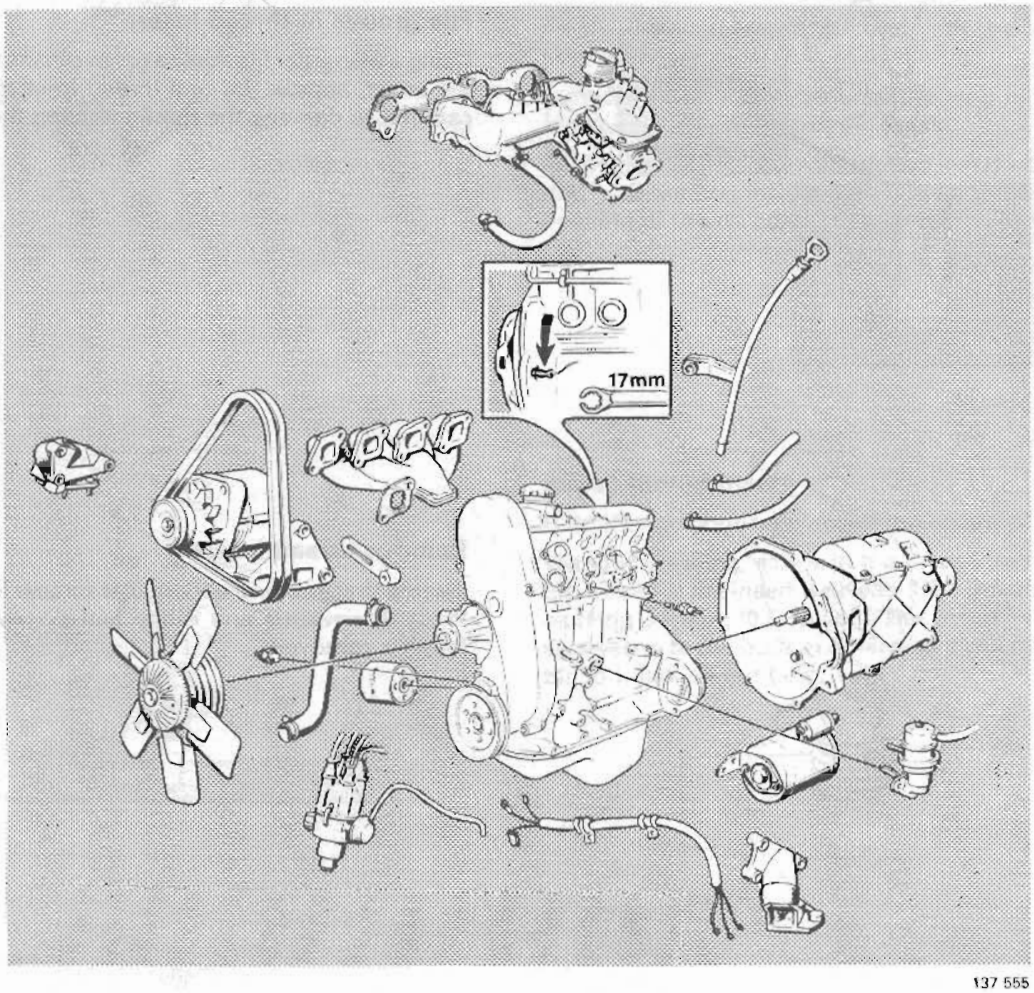

137 555

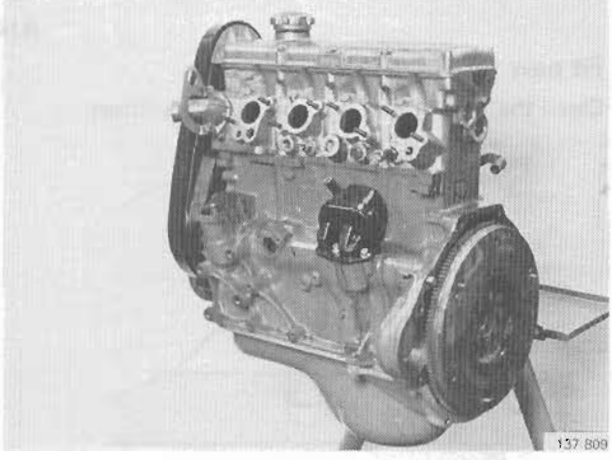

137 809

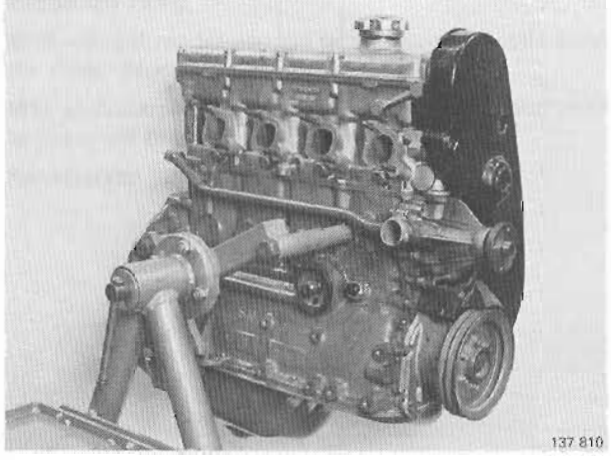

137 810

B. Engine, disassembly

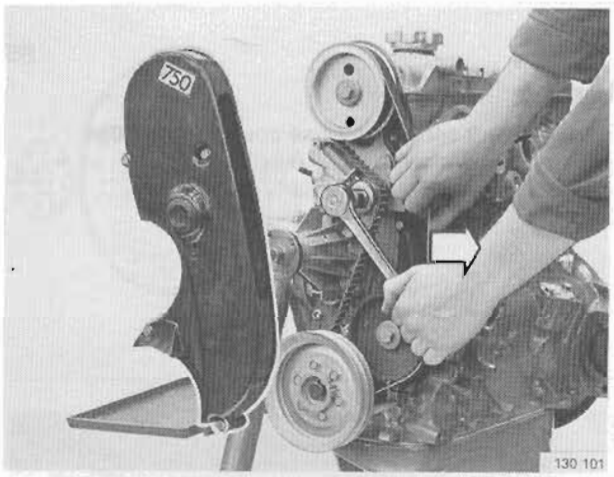

TIMING GEARS AND CYLINDER HEAD

B1

Remove timing gear case, crankshaft pulley and drive belt

Slacken belt as follows:
- slacken nut for drive belt tensioner
- stretch belt by hand
- retighten nut

Important

To prevent damage, do not rotate crankshaft or camshaft when gear belt is removed as pistons may strike valves.

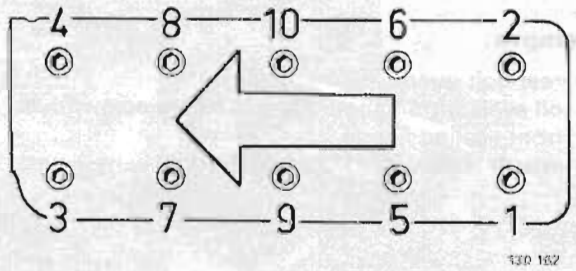

B2

Remove rocker cover and cylinder head

Unscrew screws in sequence shown adjacent.

Important

Cylinder head is made of aluminum. To avoid damage it should be placed on wooden supports when removed.

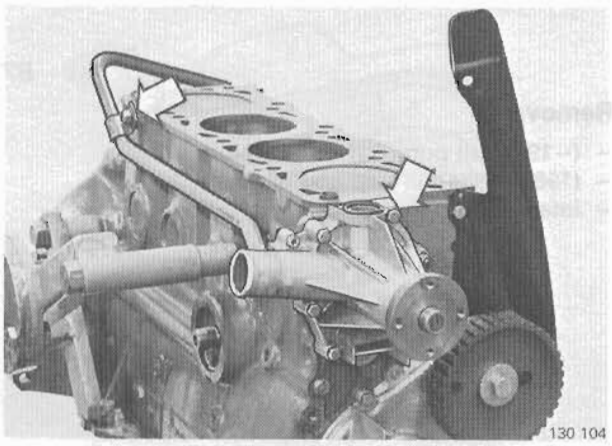

B3

Remove:

- water pump
- pipe to heater

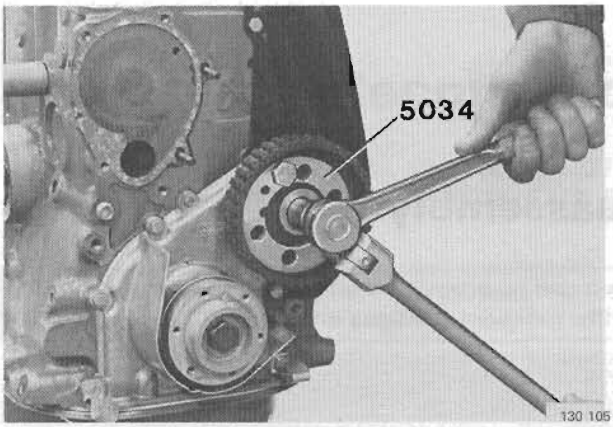

B4

Remove pulley from intermediate shaft

Use **5034** to lock shaft.

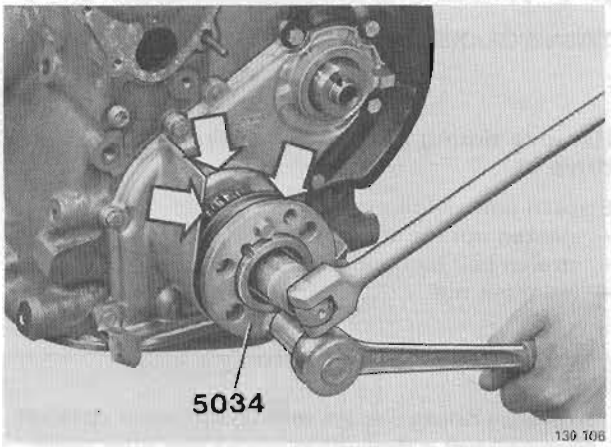

B5

Remove:

- crankshaft centre bolt use counterhold **5034**
- hub, guide plates and pulley
- key in crankshaft (only early types).

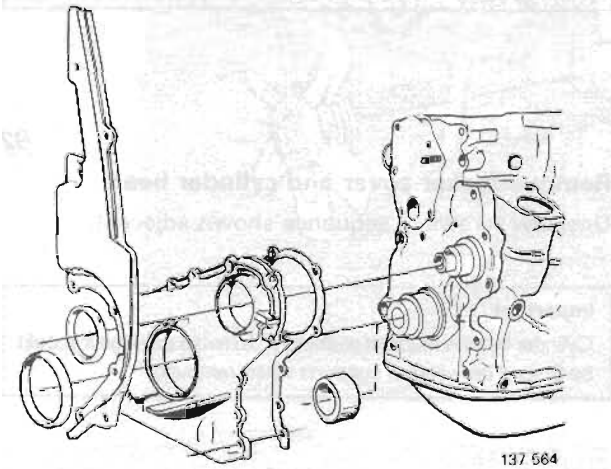

B6

Remove:

- rear belt guard
- oil seals from flange. Pry out with a screwdriver
- front sealing flange
- spacer sleeve from crankshaft (only early types).

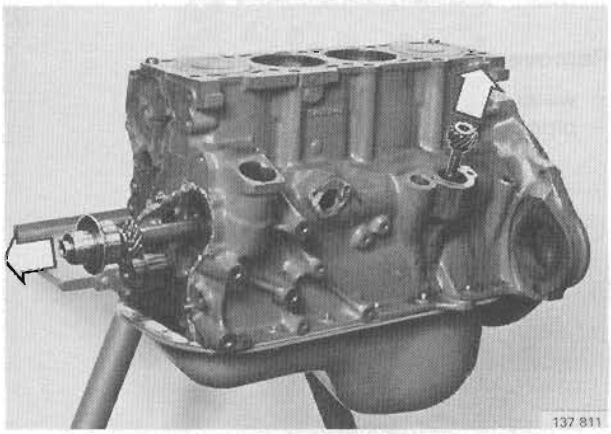

B7

Remove:

- (–1980) oil pump cover and pinion
- (1981–1984) oil trap and pinion
- intermediate shaft

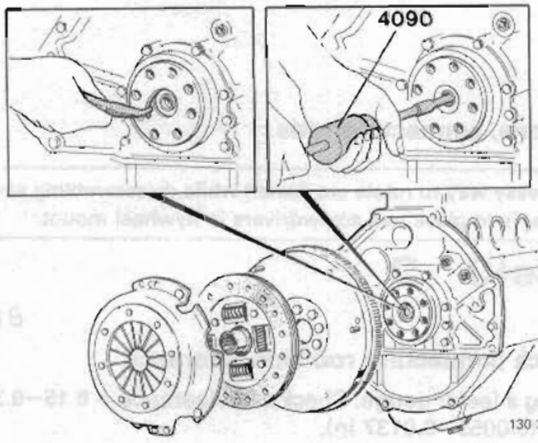

FLYWHEEL, OIL SUMP, OIL PUMP

Manual gearboxes *B8*

Remove:

- pressure plate and driven plate. Slacken pressure plate bolts crosswise, a few turns at a time to prevent warp
- flywheel. Use locking sector **5112** to prevent crankshaft from rotating
- lockring
- pilot bearing from crankshaft. Use puller **4090**

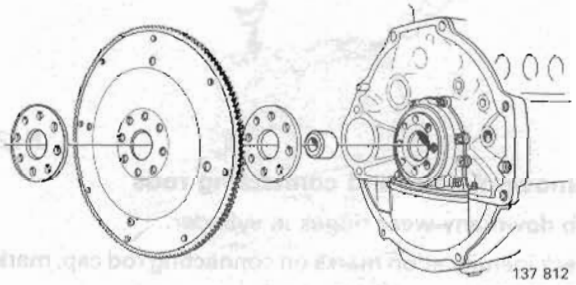

Automatic gearboxes *B9*

Remove:

- carrier plate with support plate and coupling flange. Use locking sector **5112** to lock flywheel when removing bolts.
- guide sleeve

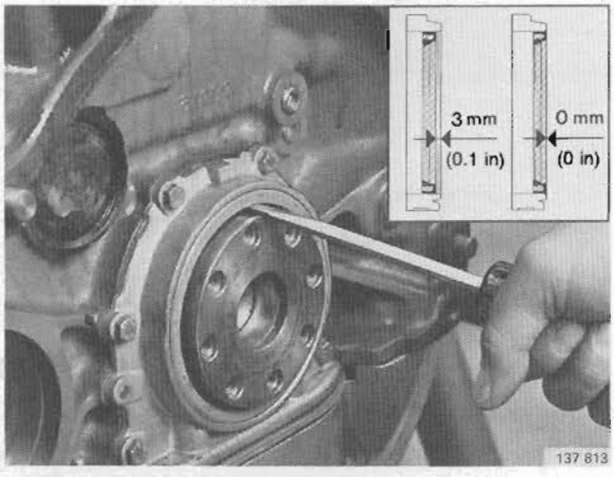

B10

Remove:

- crankshaft rear oil seal. Pry seal out with a screwdriver Check if seal is flush with flange or 3 mm (0.1 in) from flange, so that it can be refitted in same position.

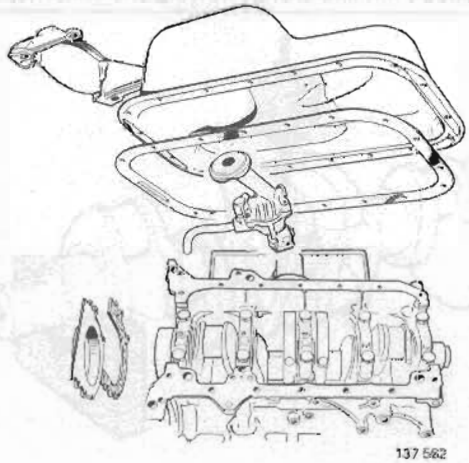

Remove:

- support bracket
- oil sump
- rear sealing flange
- oil pump and delivery pipe

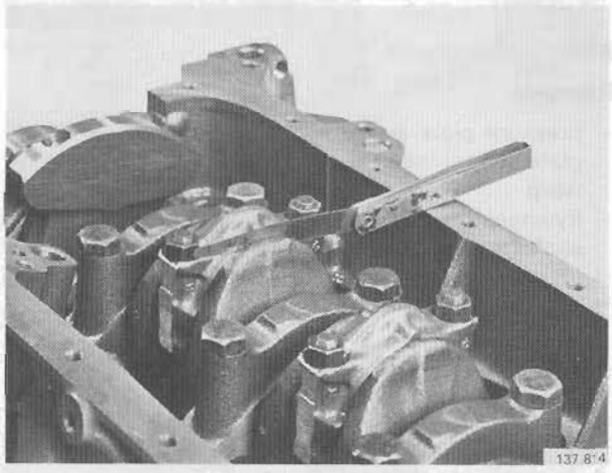

Pistons, connecting rods

An easy way to rotate crankshaft while disassembling engine, is to place two screwdrivers in flywheel mount.

B11

Check connecting rod side clearance

Using a feeler gauge. Check that clearance = **0.15–0.35 mm** (0.0059–0.0137 in).

If side play is too large, replace connecting rods.

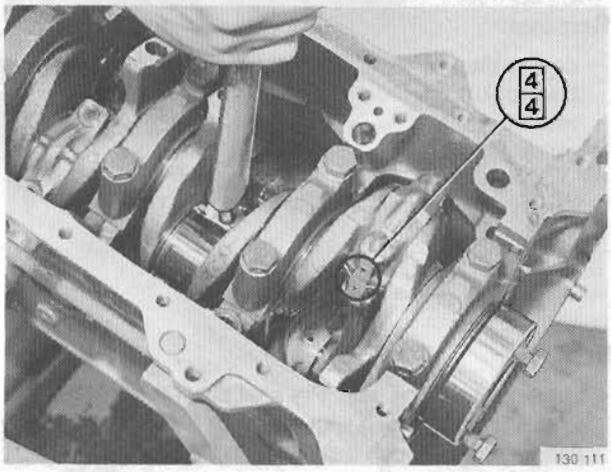

B12

Remove pistons and connecting rods

Rub down any wear ridges in cylinder.

Check identification marks on connecting rod cap, mark if necessary.

Assemble connecting rod, bearing and cap shells to prevent interchange of parts.

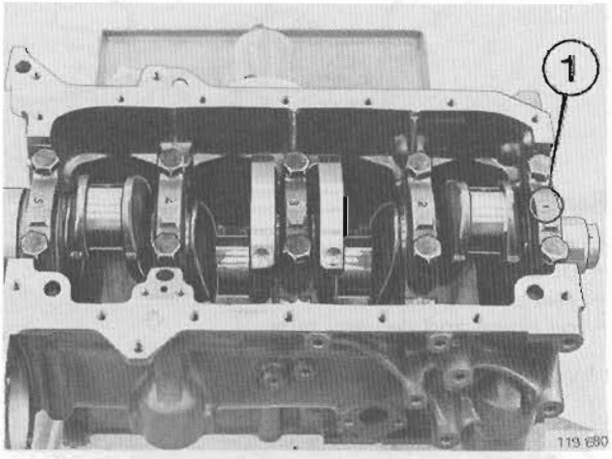

Crankshaft

B13

Remove crankshaft and main bearings

Check identification marks on caps, mark if necessary.

Important Do not interchange bearing shells and caps.

C. Cleaning, checking

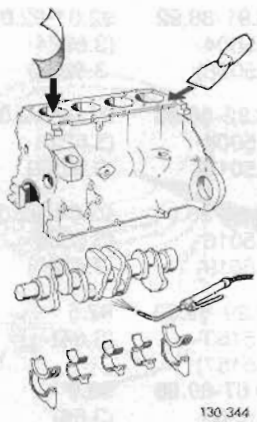
130 344

C1

Clean:

- cylinder bores (polish dull parts)
- cylinder block (contact faces, bearing seats, oilways, holes for cylinder head bolts, remove old gasket material)
- crankshaft, blow compressed air through oilways
- main bearing caps and shells.

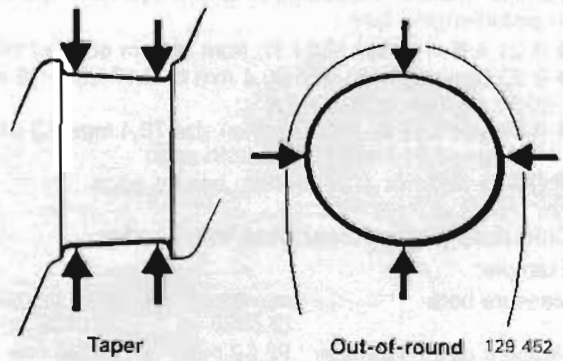

C2

Examine crankshaft

Measure out-of-round and taper with micrometer. Take measurements at different points on journals.

Connecting rod journals

Max out-of-round ..... **0.05 mm** (0.0020 in)
Max taper ..... **0.05 mm** (0.0020 in)

Main bearing journals

Max out-of-round ..... **0.07 mm** (0.0028 in)
Max taper ..... **0.05 mm** (0.0020 in)

Journals can be ground down to two undersizes, see specifications on page 7.

If crankshaft is thought to be out-of-true, check with a dial indicator as follows.

Support crankshaft on 'V' blocks. Rotate one turn and measure out-of-true for two centre journals.

Out-of-true = **max 0.05 mm** (0.0020 in)

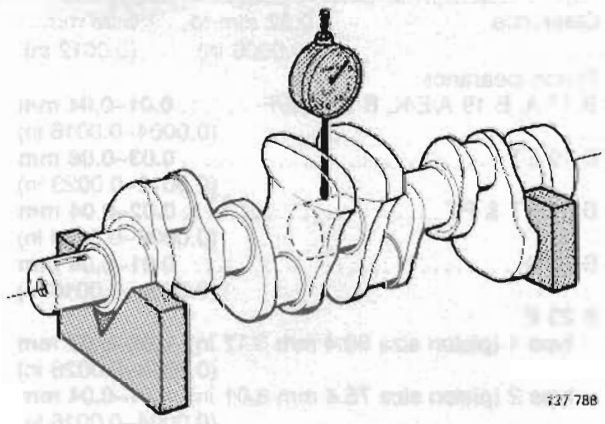
737 788

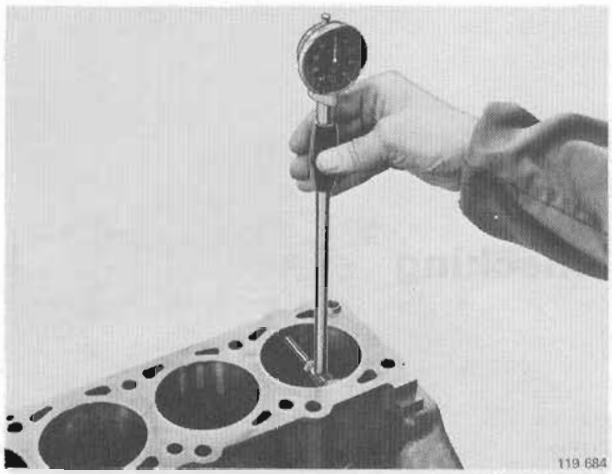

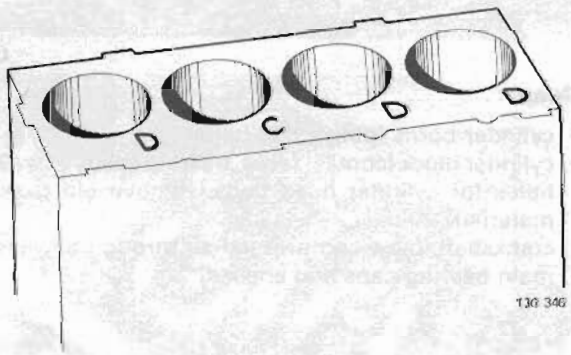

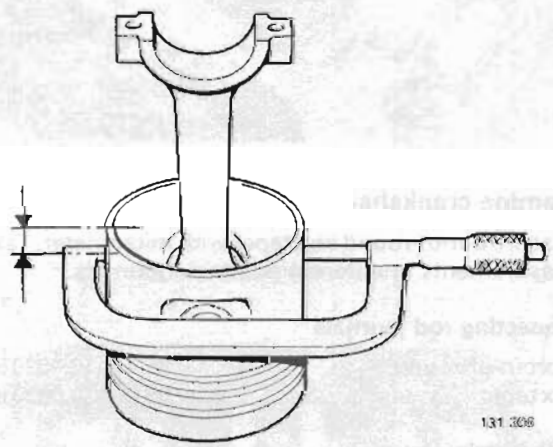

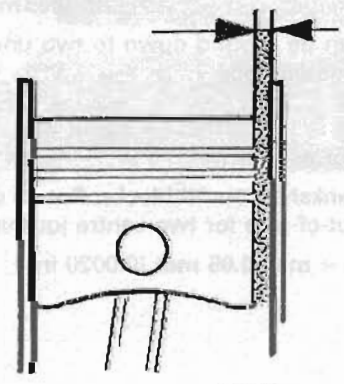

C3

Measure cylinder bores

Use an accurate bore gauge (range = 50–100 mm or 2–4 in).

Measure **max wear** crosswise just below top dead centre.

Measure **min wear** lengthwise at bottom dead centre.

C4

Identification

A letter is stamped into block next to each cylinder. (C, D, E or G).

Oversizes are indicated by OD1 (OS1) or OD2 (OS2). After reboring, punch in new size (mark).

Standard	**B 17, B 19**	**B 21**	**B 23**
(C-marked)			
mm	88.90-88.91	92.00-92.01	96.00-96.01
(in)	(3.500-3.5004)	(3.6220-3.6224)	(3.7795-3.7799)
(D-marked)			
mm	88.91-88.92	92.01-92.02	96.01-96.02
(in)	(3.5004-3.5008)	(3.6224-3.6228)	(3.7799-3.7803)
(E-marked)			
mm	88.92-88.93	92.02-92.03	96.02-96.03
(in)	(3.5008-3.5012)	(3.6228-3.6232)	(3.7803-3.7807)
(G-marked)			
mm	88.94-88.95	92.04-92.05	96.04-96.05
(in)	(3.5016-3.5019)	(3.6236-3.6240)	(3.7811-3.7815)
Oversizes:			
OS1 mm	89.29-89.30	92.5	96.3
(in)	(3.5153-3.5157)	(3.64)	(3.79)
OS2 mm	89.67-89.68	93.0	96.6
(in)	(3.5303-3.5307)	(3.66)	(3.80)

C5

Measure piston diameter

Measure diameter at right angles to gudgeon (piston) pin.

Diameter must be measured at different points depending on piston/engine type.

- B 21 A/E = **6 mm** (0.24 in) from bottom edge of skirt
- B 23 type 1 (piston size 80.4 mm or 3.17 in) = **15 mm** (0.59 in) from bottom edge
- B 23 type 2 (A, E, and F) (piston size 76.4 mm or 3.01 in) = **8mm** (0.31 in) in from bottom edge
- Others = **7mm** (0.28 in) from bottom edge

C6

Calculate piston clearance in cylinder

Example:

Measure bore	min 92.02 mm (3.6228 in)	max 92.03 mm (3.6232 in)
Measure piston diameter	92.00 mm (3.6220 in)	92.00 mm (3.6220 in)
Clearance	0.02 mm to (0.0008 in)	0.03 mm (0.0012 in)

Piston clearance:

B 17 A, B 19 A/E/K, B 21 A/E/F ..... **0.01–0.04 mm** (0.0004–0.0016 in)

B 19 ET ..... **0.03–0.06 mm** (0.0012–0.0023 in)

B 21 ET & FT ..... **0.02–0.04 mm** (0.0008–0.0016 in)

B 23 A ..... **0.01–0.04 mm** (0.0004–0.0016 in)

B 23 E

type 1 (piston size 80.4 mm 3.17 in) **0.05–0.07 mm** (0.0019–0.0028 in)

type 2 (piston size 76.4 mm 3.01 in) **0.01–0.04 mm** (0.0004–0.0016 in)

B 23 F ..... **0.01–0.04 mm** (0.0004–0.0016 in)

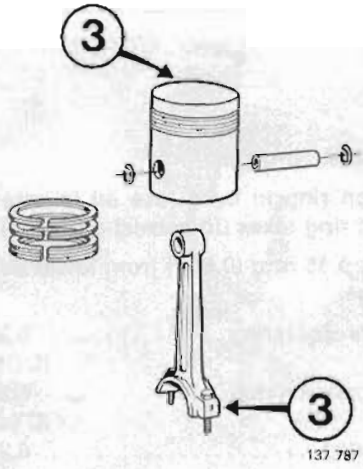

C7

Remove rings from pistons

Use piston ring pliers.

C8

Disassemble connecting rods from pistons

Check that pistons and connecting rods are marked prior to dismantling.

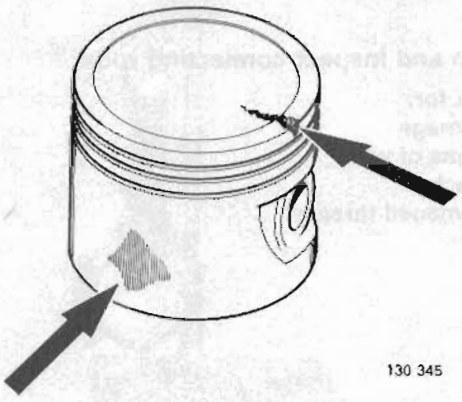

C9

Cleans and inspect pistons

Remove all traces of carbon. Scrape out grooves with e.g. an old, ground piston ring.

Check for:
- damage
- signs of wear
- cracks

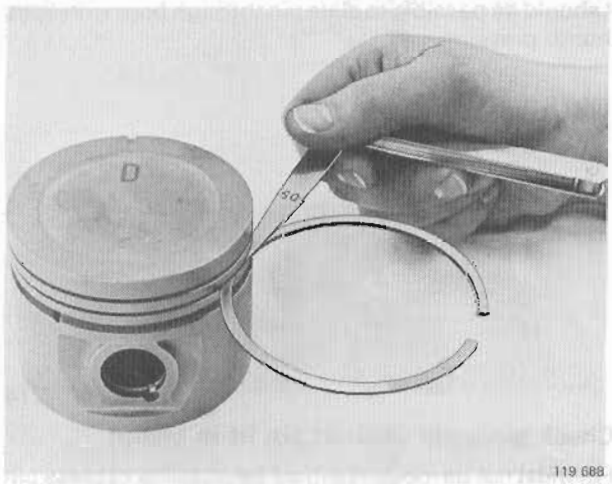

C10

Check ring to groove clearance

Use a feeler gauge

Upper compression ring ..... **0.040–0.072 mm** (0.0016–0.0028 in)

Lower compression ..... **0.040–0.072 mm** (0.0016–0.0028 in)

Oil scraper ring ..... **0.030–0.062 mm** (0.0012–0.0024 in)

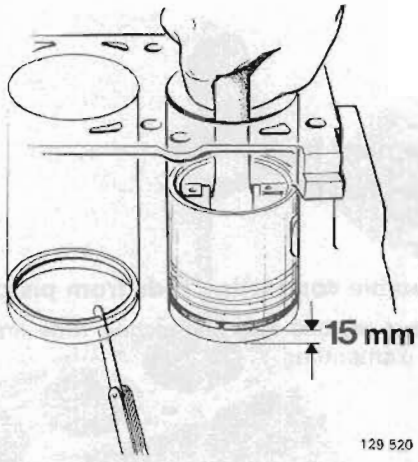

C11

Check piston ring gap

Insert piston ring in bore (use an inverted piston to ensure that ring takes up correct position.)

Measure gap 15 mm (0.6 in) from lower edge, using a feeler gauge.

Upper compression ring ..... **0.35–0.65 mm** (0.014–0.026 in)
Lower compression ring ..... **0.35–0.55 mm** (0.014–0.022 in)
Oil scraper ring ..... **0.25–0.60 mm** (0.010–0.024 in)

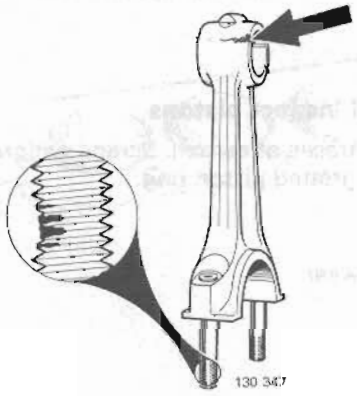

C12

Clean and inspect connecting rods

Check for:
- damage
- signs of wear
- cracks
- damaged threads

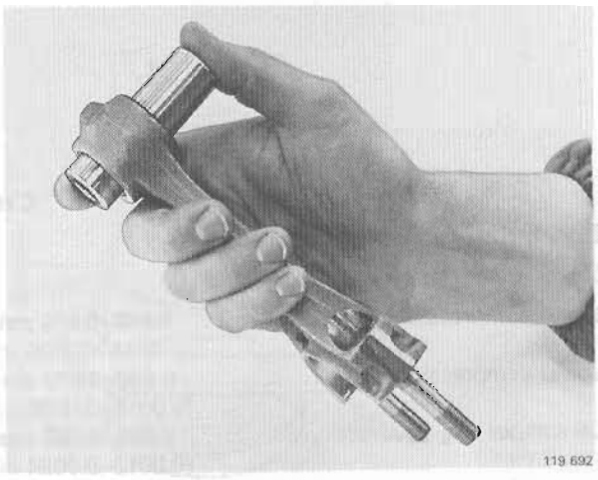

C13

Check gudgeon (pistons) pin fit

It should be possible to slide pin through bore with light thumb pressure.

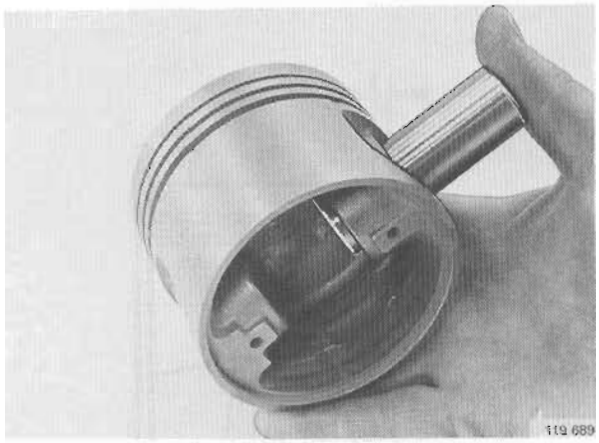

C14

Check gudgeon (piston) pin fit in piston

Pin must not be loose. It should be possible to press pin through with thumb pressure.

Oversized pins can be used if bore is worn.

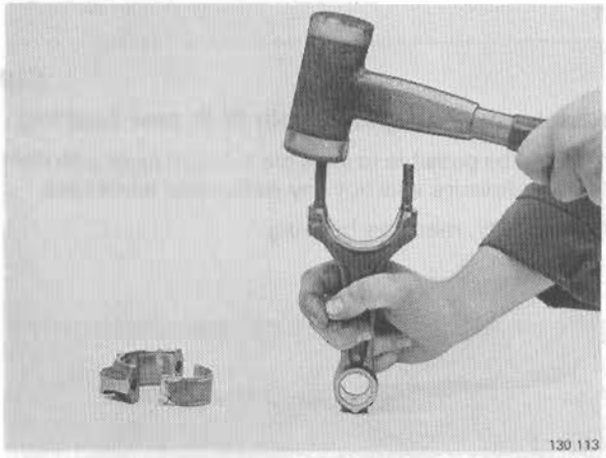
130 113

Replacing damaged connecting rod bolt

Operation C15–16

C15

Tap out old bolt

Remove cap and shells.

Rest connecting rod on hard, level surface and tap bolt out with a mallet.

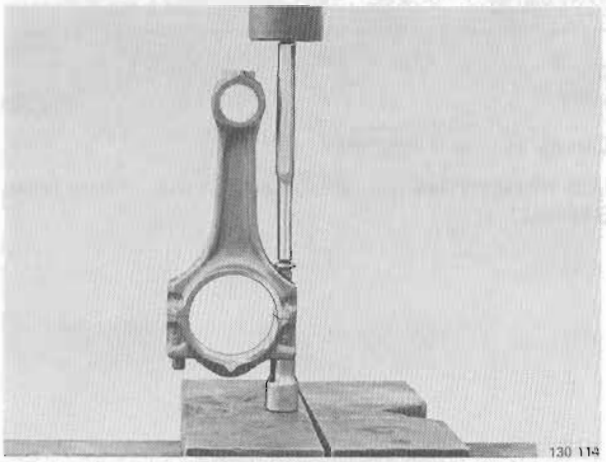
130 114

C16

Install new bolts

Position cap, observing assembly marks.

Place a 12 mm socket beneath cap and press in new bolt.

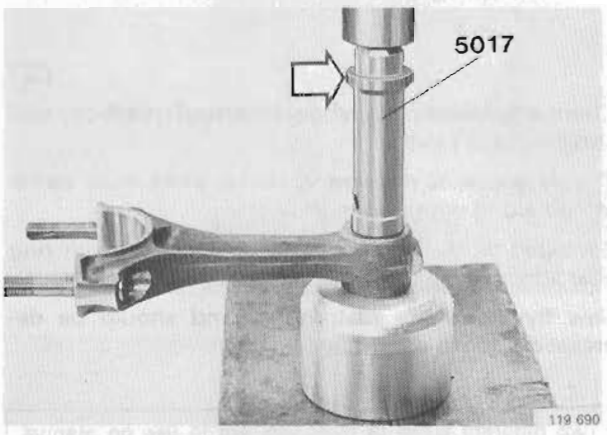

119 690

Replacing connecting rod bushing

Operations C17–19

C17

Press out old bushing

Use small end of drill 5017.

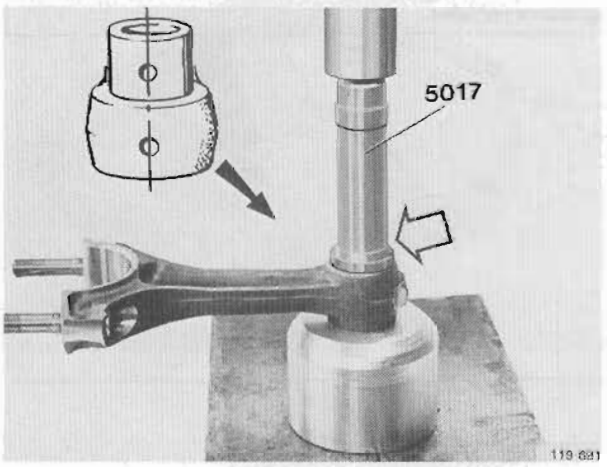

119 691

C18

Press in new bushing

Use wide end of 5017.

Important Make sure that lubrication holes in bushing and connecting rod align

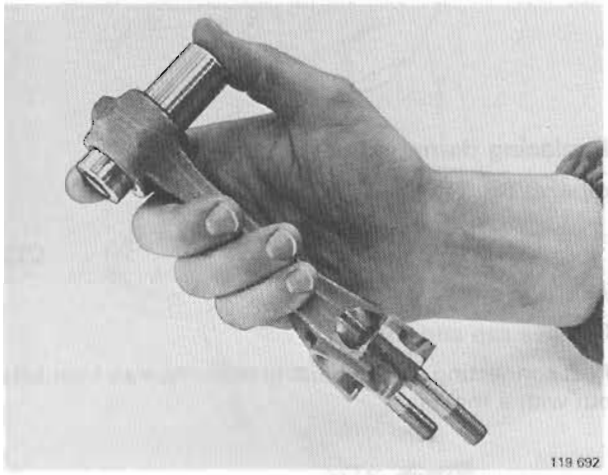

C19

Check gudgeon (piston) pin fit in new bushing

It should be possible to slide pin through bore with light thumb pressure without any noticeable looseness.

If necessary, machine bushing.

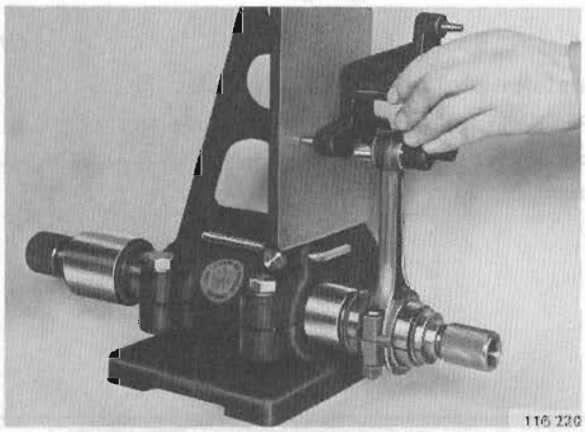

C20

Check connecting rod

Use an alignment gauge to check for out-of-true twist, S-form.

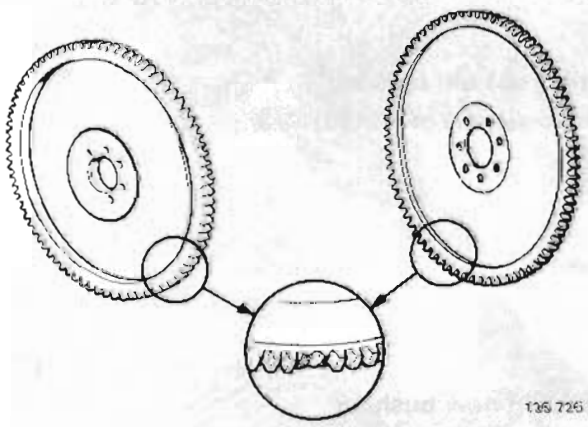

C21

Clean and inspect flywheel (manual gearbox) and carrier plate (auto)

If replacement is necessary, carrier plate must be replaced along with ring gear.

Damaged worn flywheel must be replaced with ring gear attached but ring gear can be replaced separately.

New flywheels are rustproofed and should be degreased prior to assembly

Two different types of flywheels are in use on manual gearbox vehicles.

Replacing ring gear

Operations C22–26

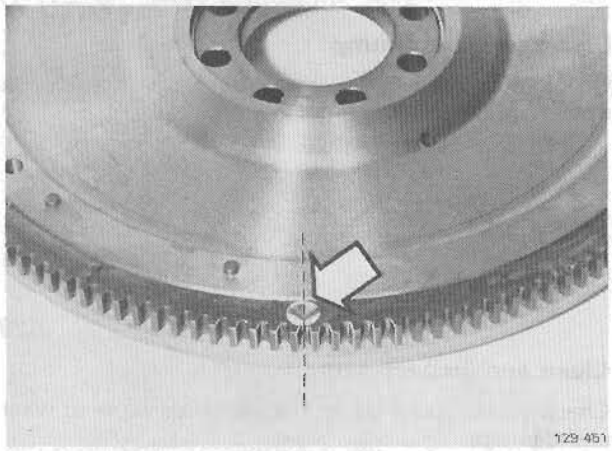

C22

Heat new ring gear to 230°C (450°F)

Heat ring gear in an oven or with an oxycetylene torch.

If oven is to be used, begin heating at this stage.

C23

Drill a hole between two cogs.

Use an 10 mm (0.4 in) drill.

Depth = 9 mm (0.35 in).

Important: Do not drill into flywheel as this may cause out-of-balance.

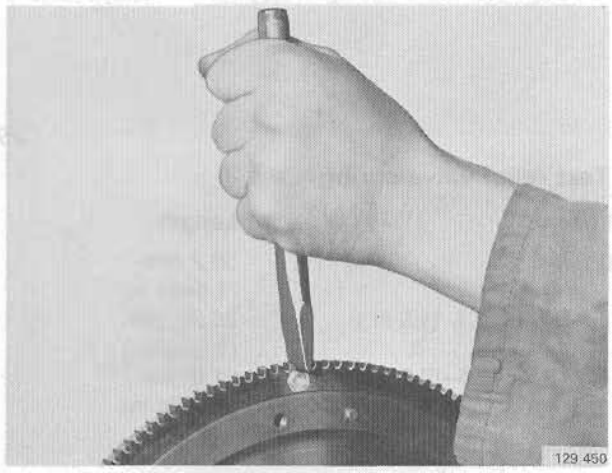

C24

Remove ring gear

Mount flywheel in a vice protected by soft jaws.

Lever off ring gear with a screwdriver. It may be necessary to split ring gear above drilled hole.

Clean mating surfaces on flywheel.

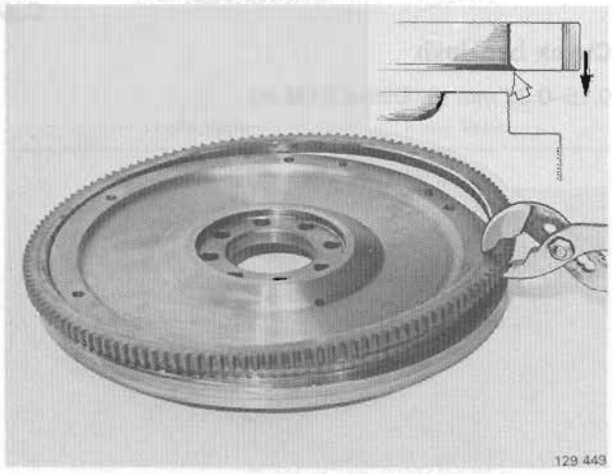

C25

Heat new ring gear to 230°C (450°F)

Check temperature with solder (40% tin, 60% lead) solder melts at 220–230°C (430–450°F).

C26

Install new ring gear

Important: Bevelled side of ring gear must face flywheel.

If necessary tap ring gear until flush with flywheel, using a brass drift.

Leave to cool.

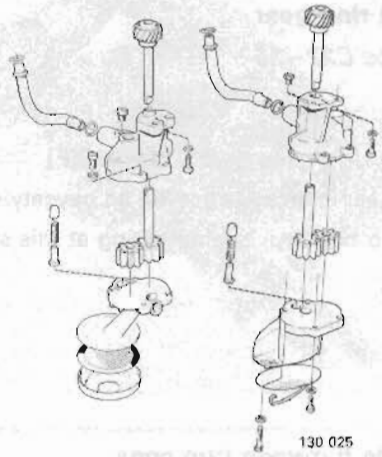

Oil pump, cleaning – inspection

Operations C27–33

C27

Disassemble oil pump

On older types it is necessary to remove strainer to obtain access to retaining screws.

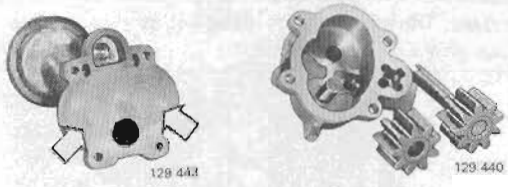

C28

Clean and inspect pump

Check gears, pump body and cover for signs of wear and damage.

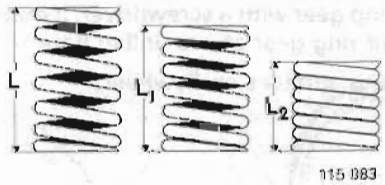

C29

Test relief valve spring

Load	Length
0	39.2 mm (1.5445 in)
46–54 N (10.1–11.9 lb.)	26.25 mm (1.0343 in)
62–78 N (13.6–17.2 lb.)	21.0 mm (0.8274 in)

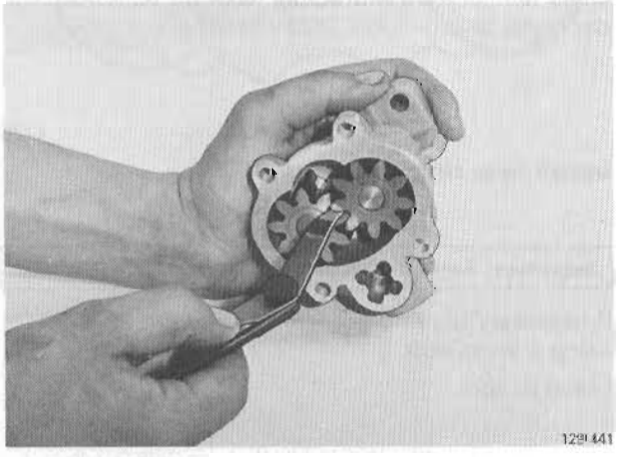

C30

Check backlash

0.15–0.35 mm (0.0059–0.0138 in).

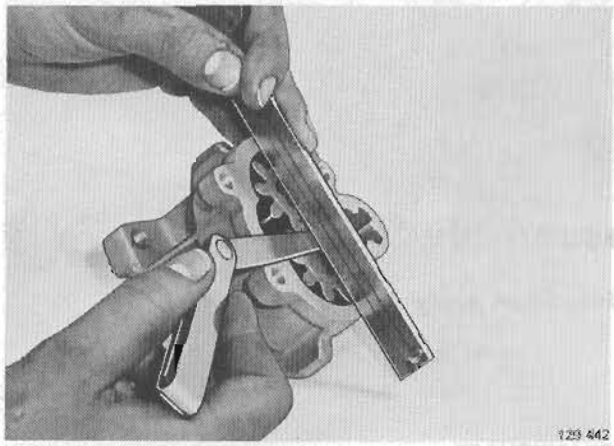

C31

Check gear end play

0.02–0.12 mm (0.0008–0.0047 in).

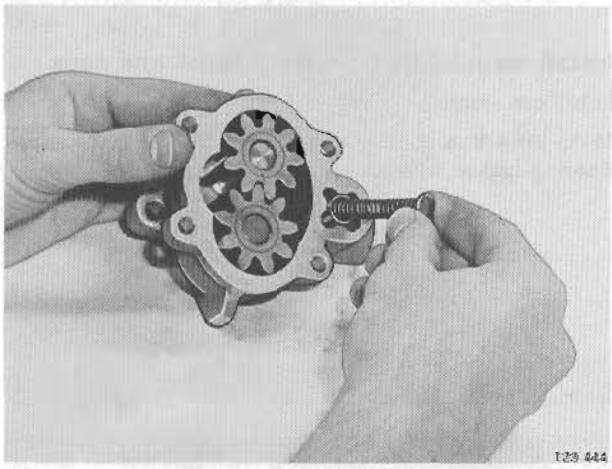

C32

Fit plunger and spring

Earlier types have a valve ball and spring.

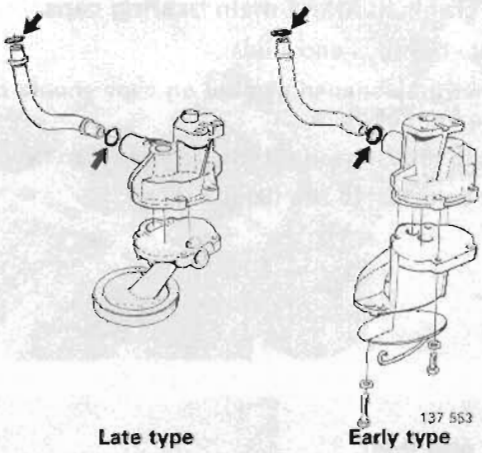

C33

Assemble oil pump

Connect delivery pipe using news oil seals.

D. Engine, assembly

Always use new seals, O-rings and gaskets when assembling the engine

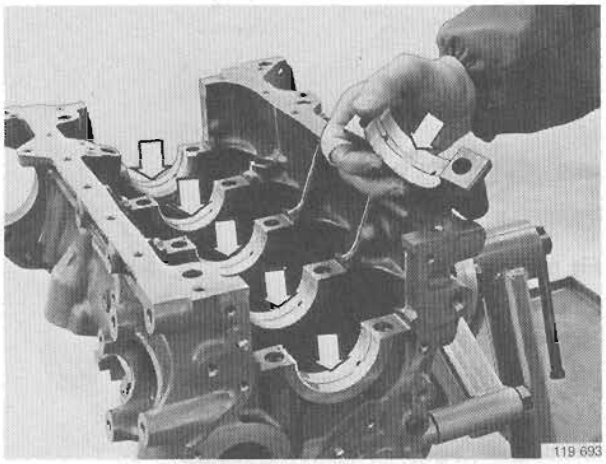

CRANKSHAFT

D1

Install main bearing shells in block and caps

Lubricate shells.

Make sure that matched pairs are installed together. Bearing cap at flywheel end is marked 5.

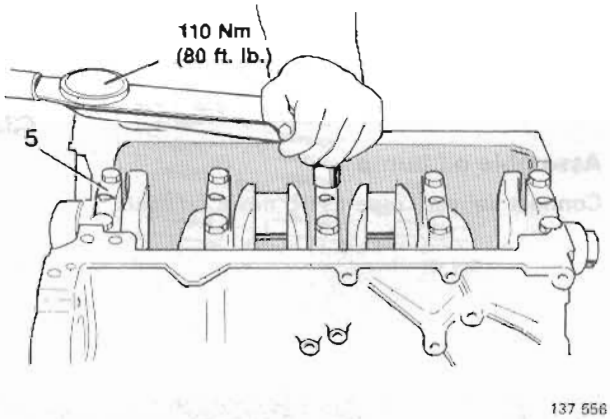

D2

Install crankshaft and main bearing caps

Lubricate bearings and studs.

Note that drop-shaped symbol on caps should point towards front of block.

Cap No. 5 (thrust bearing) should be next to flywheel.

Torque bolts to **110 Nm** (80 ft.lbs).

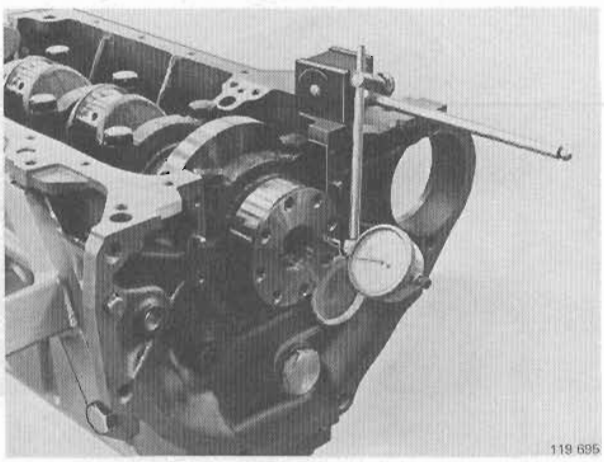

D3

Check end float.

Move crankshaft lengthwise back and forth and measure clearance with a dial indicator.

End float = max. **0.25 mm** (0.0099 in)

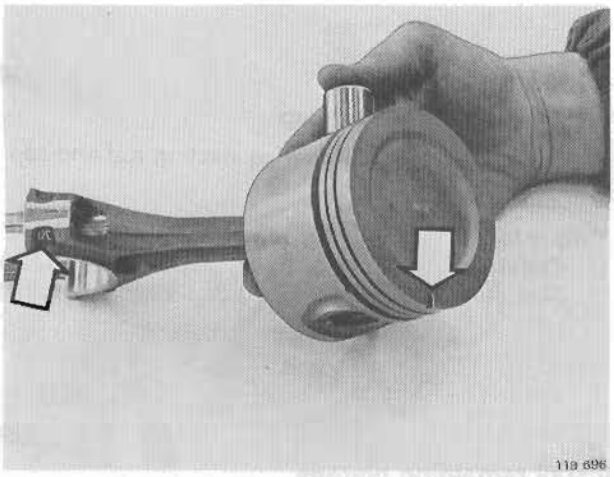

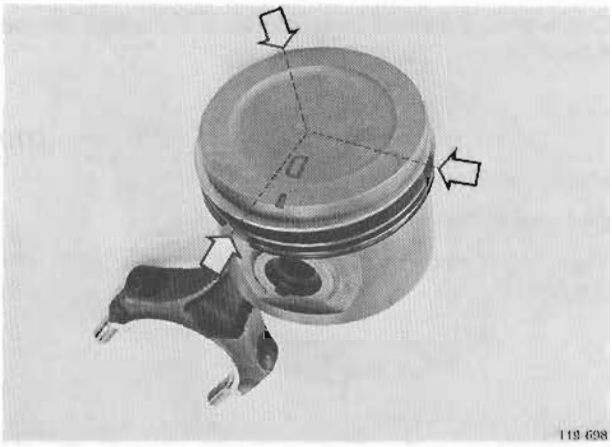

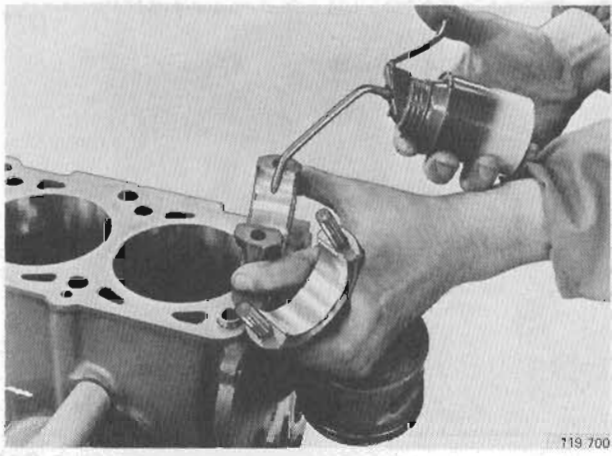

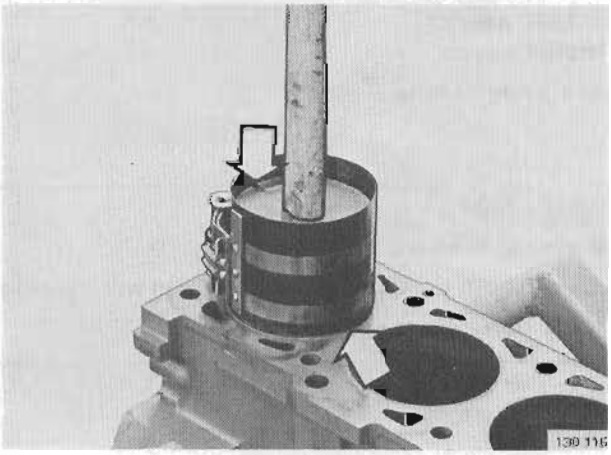

PISTONS, CONNECTING RODS

D4

Assemble pistons to connecting rods

Mark on piston crown should face forwards.

Connecting rod mark should face towards oil filter.

Check that pistons and connecting rods are not interchanged.

D5

Install piston rings

Turn rings so that gaps are 120° apart.



D6

Install bearing shells in connecting rods and caps

Oil cylinder liners, pistons and shells.

D7

Place No. 1 liner in cylinder

Turn crankshaft so that No. 1 crank points directly down.

Insert piston using a ring compressor tool.

Mark on piston should face forwards.

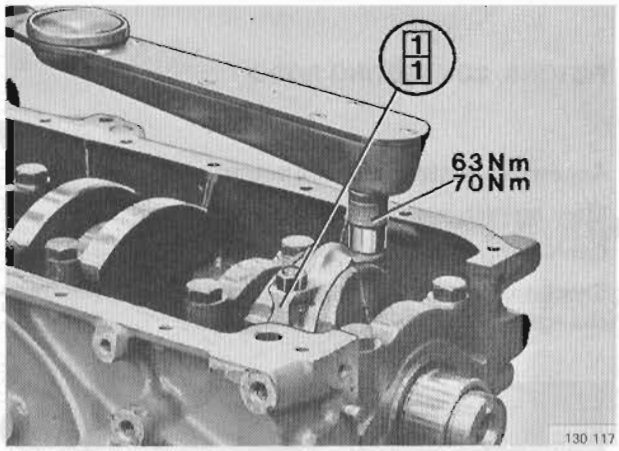

D8

Install connecting rod cap

Check identification mark on connecting rod and cap.

Oil studs and use new nuts.

Torque to:
Old studs ..... **63 Nm** (46 ft.lbs)
New studs ..... **70 Nm** (51 ft.lbs)

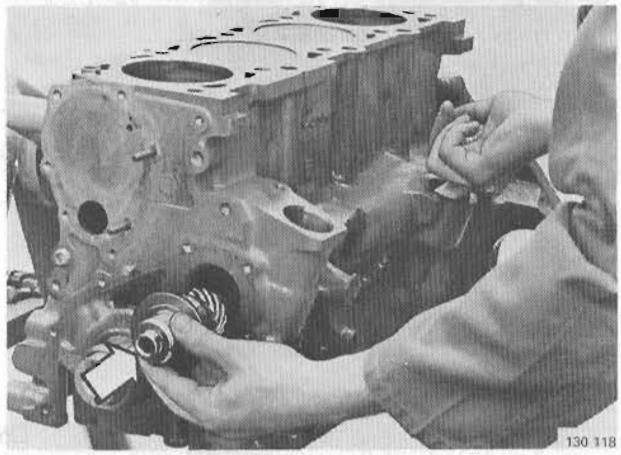

D9

Install remaining pistons

Check after installing each cap that crankshaft can be turned.

D10

Install intermediate shaft.

Oil bearing and gear.

Place finger in oil pump opening and guide shaft into position.

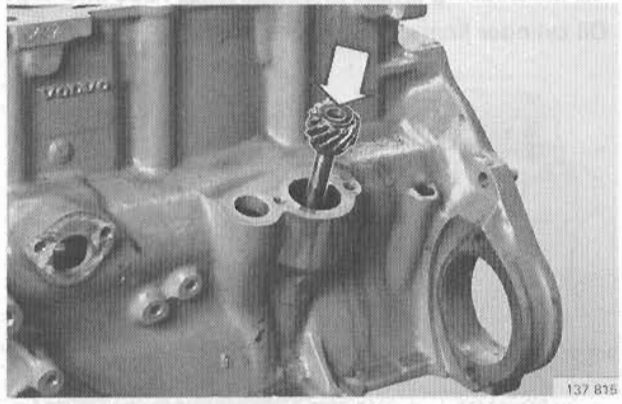

D11

Install oil pump pinion

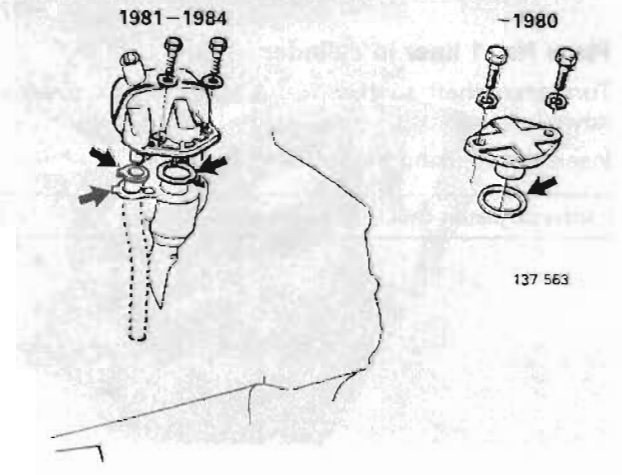

D12

–1980 models
Install cover

Use a new O-ring.

1981–1984

Install drain tube and oil trap

Press tube in as far as possible and align with opening.

Use a new oil trap O-ring.

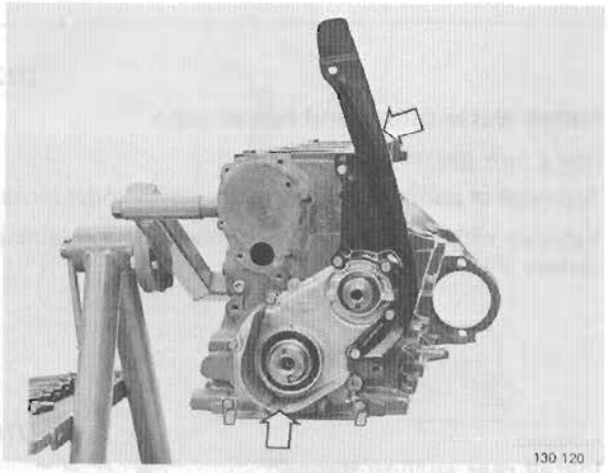

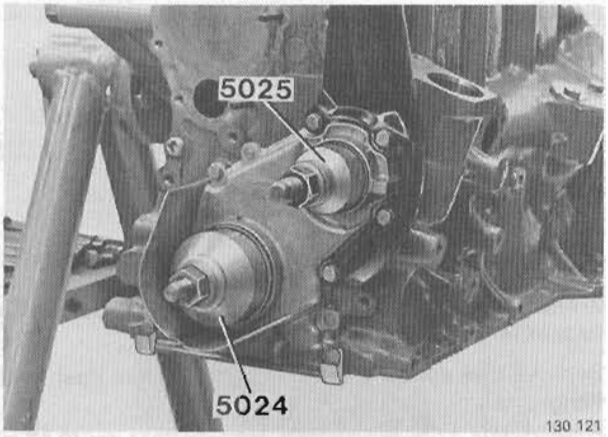

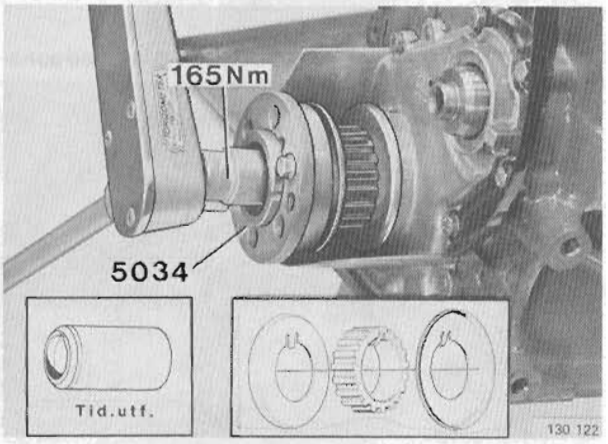

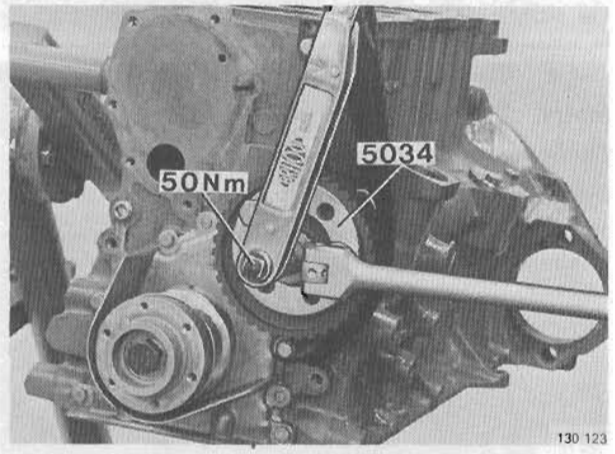

OIL SEALS, TIMING GEARS

D13

Install front sealing flange and rear belt cover

Sealing flange should be installed without seals.

Use a new gasket.

Trim edges of gasket.

Note: Do not forget two cable harness clips.

D14

Lubricate and install front oil seals

Use press tool **5025** for intermediate shaft seals and **5024** for crankshaft seals.

Check that seals are not damaged or twisted.

D15

Install:

- (early types) spacer sleeve on crankshaft. Bevelled edge of sleeve should face forwards.
- key (early types)
- guide plates (edge facing away from pulley)
- pulley. (Later types: install pulley with key bevel facing cylinder block)
- hub
- centre bolt

Torque center bolt to **165 Nm** (120 ft. lbs.) using **5034**.

D16

Install intermediate shaft pulley

Mark on pulley should face outwards.

Torque to **50 Nm** (36 ft.lbs). Use counterhold **5034**.

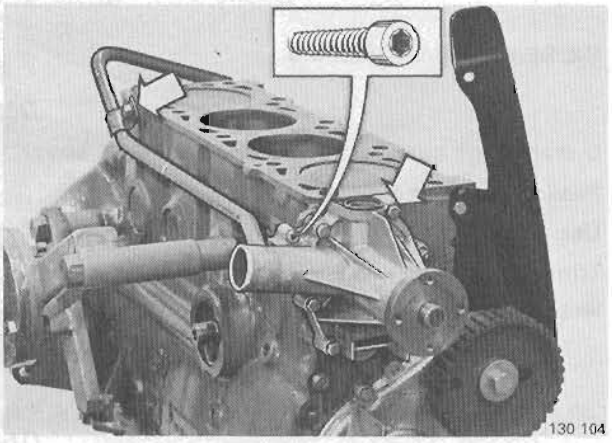
130 104

D17

Install water pump and heater pipe

Use a new gasket and new O-ring.

Top edge of pump should be flush with cylinder block.

Vehicles with Pulsair system: replace tube retaining screws with inhex type.

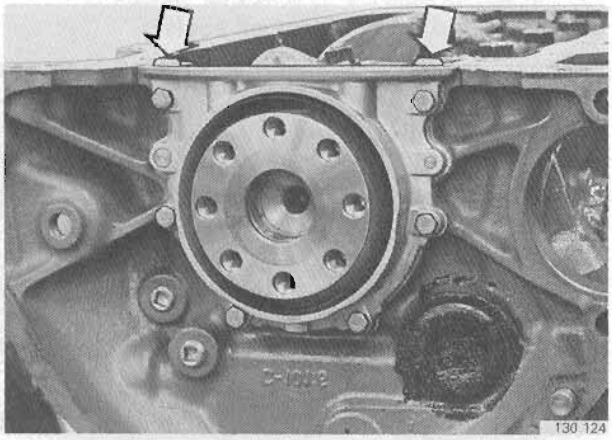
130 124

D18

Install rear sealing flange

Use a new gasket. Trim edges of gasket.

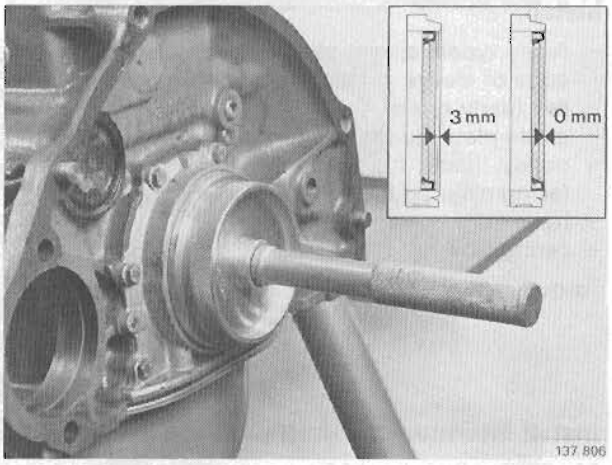

137 806

D19

Insert oil seal in rear sealing flange

Assemble special tool **1801** and drift **5276**.

Oil contact faces and place seal in drift.

If end of crankshaft shows signs of wear press seal further in than before.

Remove **one** spacer from drift if old seal is flush with flange.

Remove **two** spacers from drift if old seal is 3 mm (0.12 in) from flange.

Leave both spacers in drift if crankshaft is in good condition.
Tap in seal until drift seats against crankshaft.

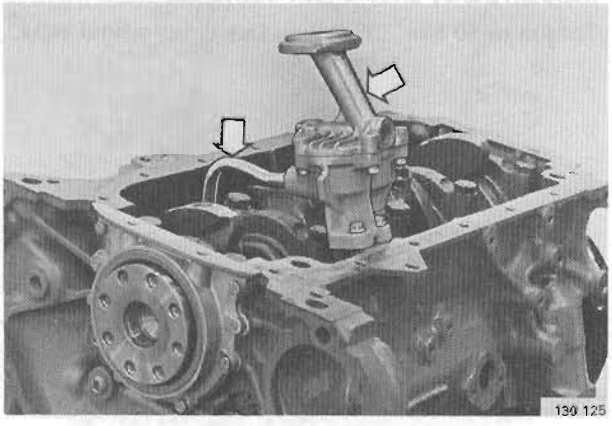
130 125

OIL PUMP, SUMP

D20

Install oil pump and pipe

Check that pump shaft fits into drive gear.

Do not forget to install O-rings in pipe.

1981–84: Secure bracket for oil trap hose to oil pump retaining screws. See next page.

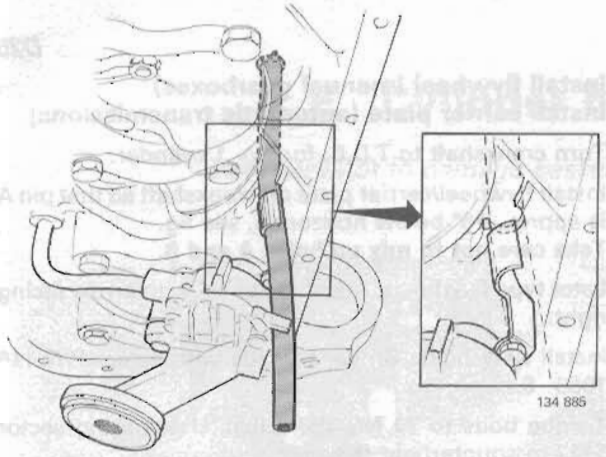

1981–1984 *D21*

Secure oil trap drain hose

Secure bracket for drain hose to oil pump retaining screw.

Make sure that hose is clamped behind lug on oil pump.

Important: Do not shorten hose. It is important that hose is of exact length.

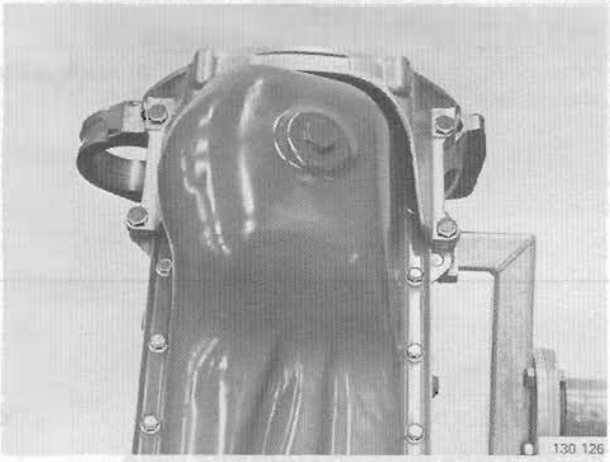

D22

Install:

- oil sump gasket. Turn mark on gasket to face starter motor mount.
- oil sump
- support bracket. Do not tighten bolts at this stage.

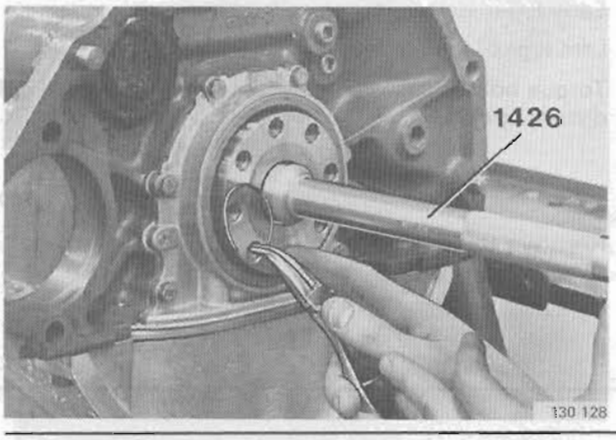

FLYWHEEL, CLUTCH, CARRIER PLATE

Manual gearboxes *D23*

Install:

- pilot bearing in crankshaft using drift **1426**
- lock ring.

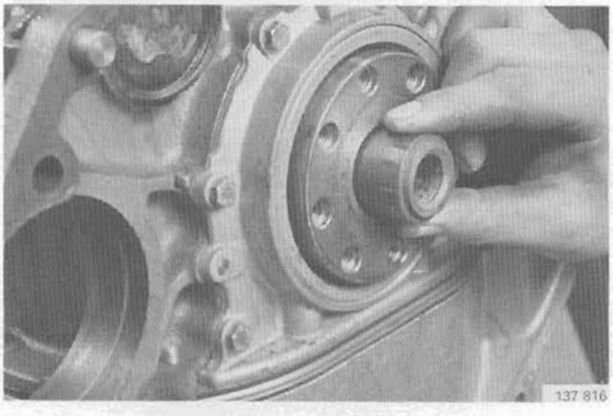

Automatic transmissions *D24*

Install:

- guide sleeve with bevelled end facing outward.

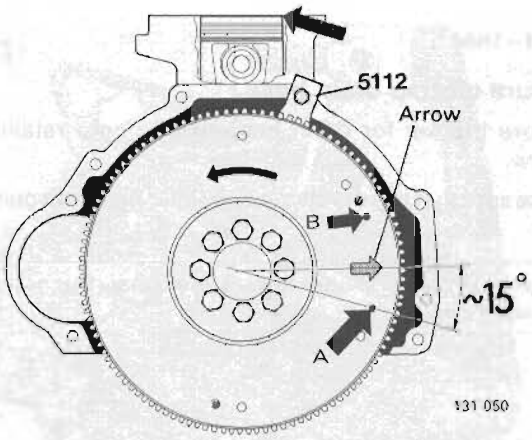

D25

Install flywheel (manual gearboxes)
Install carrier plate (automatic transmissions)

Turn crankshaft to T.D.C. for No. 1 cylinder.

Install flywheel/carrier plate on crankshaft so that pin A is approx. 15° below horizontal, see fig.
Take care not to mix up holes A and B.

Later type flywheels: Install flywheel with arrow facing right.

Install **new** bolts. Smear threads with sealer P/N 116 1056–5.

Torque bolts to **70 Nm** (50 ft.lbs). Use locking sector **5112** to counterhold flywheel.

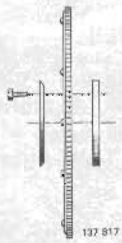

Automatic gearboxes:

Note position of support plates. Edge of outer plate should face outwards.

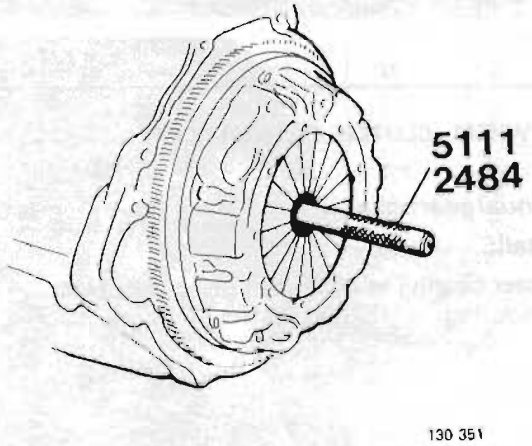

Manual gearboxes *D26*

Install driven plate and pressure plate

Early type: Use centering drift 2484.

Late types (evolute teeth): Use centering drift 5111.

Torque bolts crosswise a few turns at a time to avoid distorting clutch.

D27

Remove locking sector 5112

E. Cylinder head, disassembly

Take care not to damage gasket face when dismantling cylinder head.

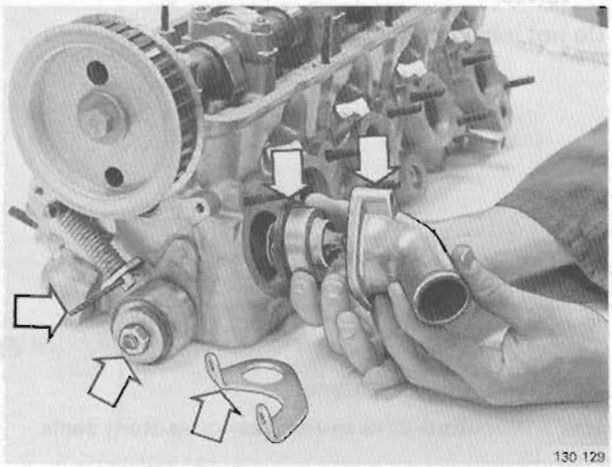

E1

Remove

- belt tensioner. Unhook spring with a 3 mm (0.1 in) drill
- lifting eye, thermostat housing and thermostat.

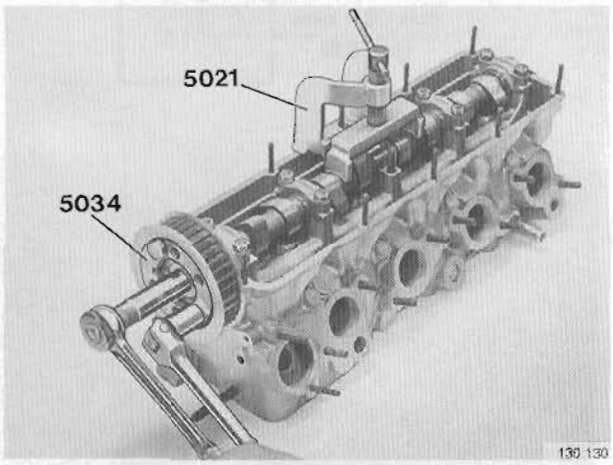

E2

Remove camshaft pulley

Counterhold pulley with 5034.

E3

Remove camshaft

Remove center cap.

Position press tool 5021 and press camshaft into its bearings.

Remove remaining bearing caps.

Remove press tool, camshaft and oil seals.

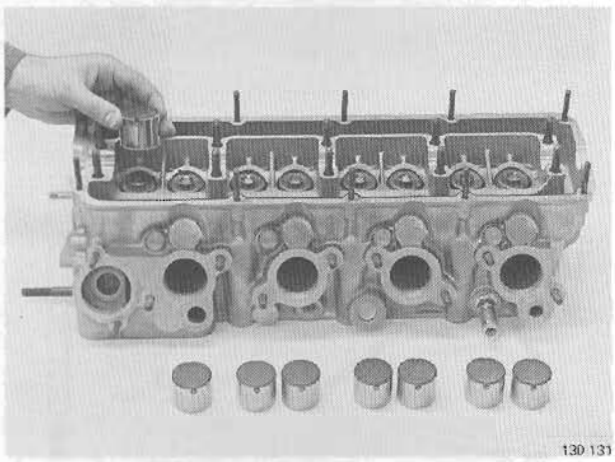

E4

Remove:

- tappets and shims
- rubber seals from valves.

Note: Do not interchange tappets.

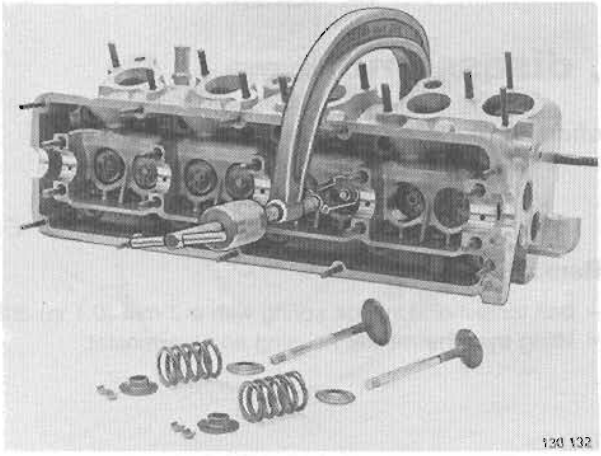

E5

Remove:

- valve cotters
- upper spring seats
- valve springs
- lower spring seats
- valves.

Do not interchange parts.

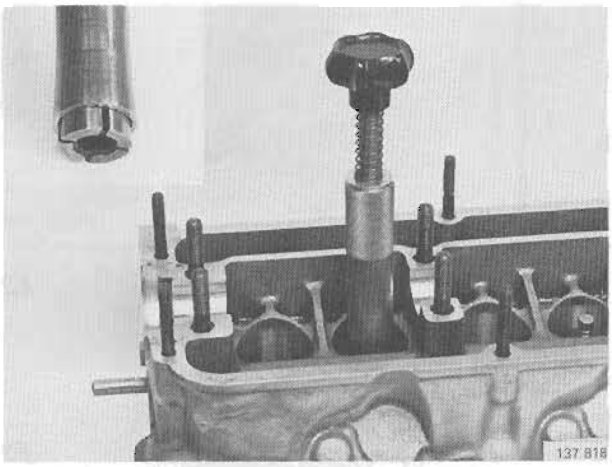

E6

Remove valve stem seals

Use special tool **5219** to remove valve stem seals.

Cylinder head, cleaning, inspection

E7

Clean cylinder head and gasket face

E8

Check cylinder head for distortion

Use a steel ruler and feeler gauge.

Distortion must not exceed 0.5 mm (0.02 in) longitudinally and 0.25 mm (0.01 in) across cylinder head.

Important: If distortion is greater than 1.0 mm (0.04 in) longitudinally or 0.5 mm (0.02 in) crosswise cylinder head must be replaced.

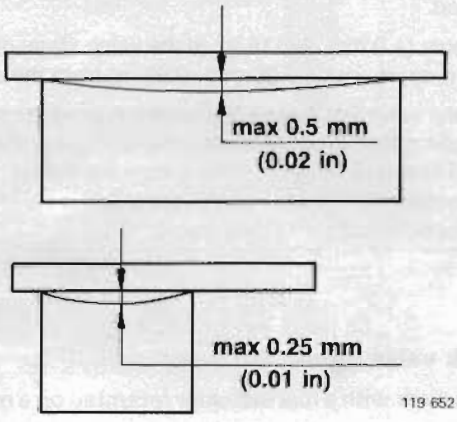

Cylinder head height, new . . . . . **146.1 mm (5.7563 in)**
min (after machining) . . . . . **145.6 mm (5.7366 in)**

E9

Clean/inspect valves and valve seats

Clean valve seats with a cutter.

Remove carbon from combustion chambers and valves.

If valve seats are fractured or show signs of excessive wear they must be replaced.

Clean and check spark plug threads for damage.

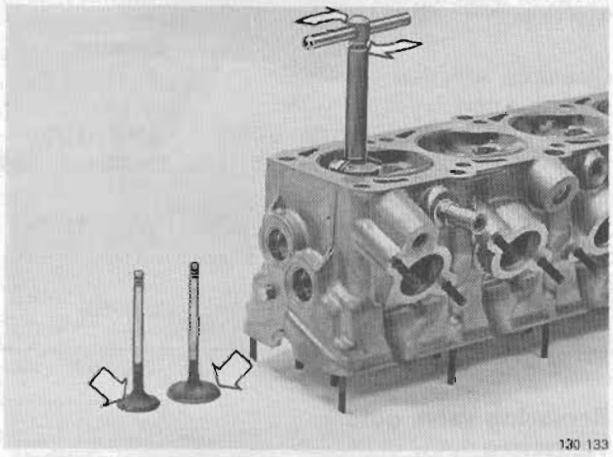

Turbocharged engines have sodium-filled exhaust valves. Scrapped valves must not be mixed with ordinary scrap iron before first removing the sodium.

See instructions on next page.

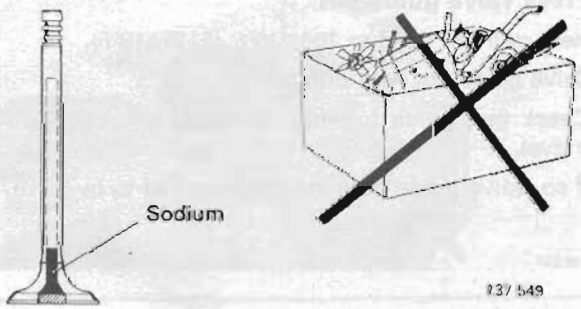

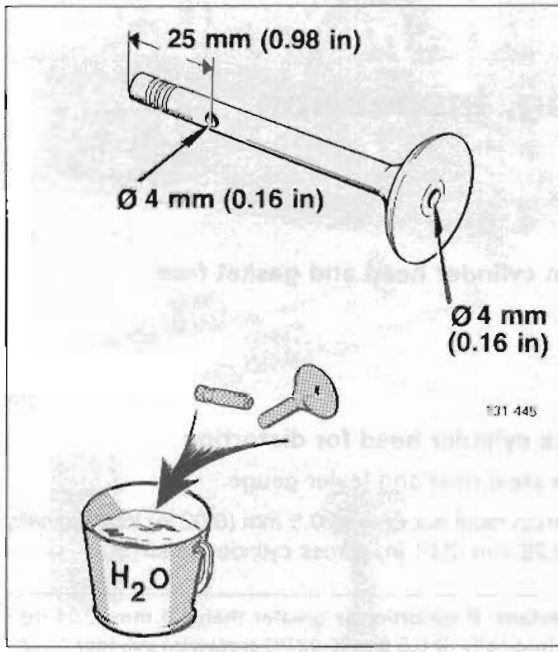

E10

Scrapping sodium-filled exhaust valves

Caution: Sodium in contact with water is explosive. Consequently when drilling, cutting or performing any form of work which involves separating sodium, ensure the sodium does not come in contact with water.

1. Drill a hole (4.0 mm or 0.16 in) in the valve crown as illustrated.
2. Drill a hole (4.0 mm or 0.16 in) in the valve stem, or cut the stem approximately 25 mm (0.98 in) from the end.
3. Throw the valve into a bucket of water. A powerful reaction of an explosive nature will occur and you are advised to stand at least 3 meters (10 feet) from the bucket. The reaction lasts 1–2 minutes and afterwards the valve can be mixed with ordinary scrap metal.

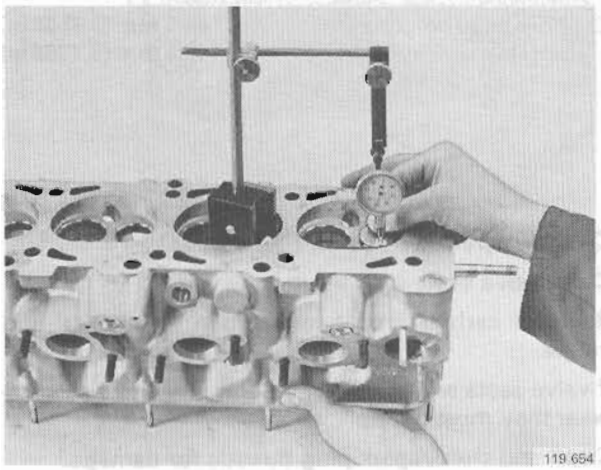

E11

Check valve guides for wear

Check wear with a dial indicator mounted on a magnetic stand.

Use new valves and press valves up **1–2 mm** (0.04–0.08 in) with finger.

	Inlet	Exhaust
Clearance, with new valve and new guide .....mm	0.030–0.060	0.060–0.090
(in)	(0.0012–0.0024)	(0.0024–0.0035)
Max. clearance measured with new valve and old guide .....mm	0.15	0.15
(in)	(0.0059)	(0.0059)

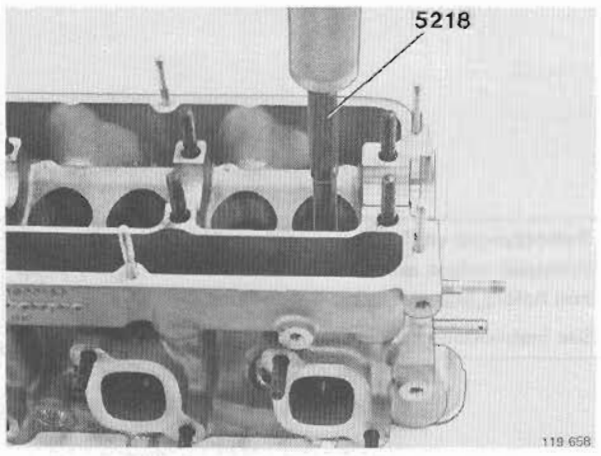

Replacing valve guides

Operations E12–16

E12

Press valve guide out

Heat cylinder head to 100±10°C (212°±18°F).

Drive guide out with drift 5218.

Check that guide has not damaged bore during removal.

If so, valve guide bore must be reamed to oversize.

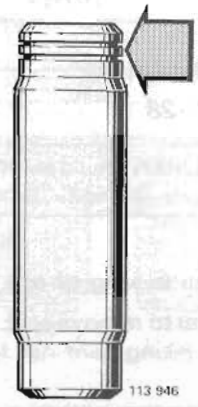

E13

Identification of valve guides

Valve guides are marked with grooves to indicate oversize. Use new guide of same number of grooves as previous guide.

No.of grooves	Size
0	Standard
1	Oversize 1
2	Oversize 2
3	Oversize 3

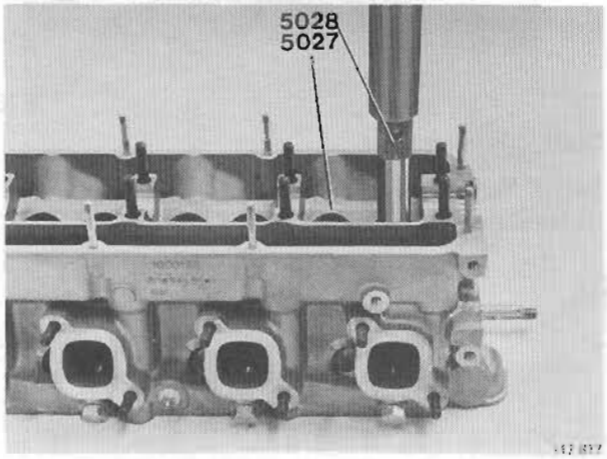

E14

Press in new valve guide

Cylinder head should be at room temperature

Use drift **5027** for inlet valves and **5028** for exhaust valves.

Press guide until drift contacts cylinder head to give valve correct protrusion.

Important: Force used for pressing valve guide into position must be at least 9000 N (900 kp). If this force is not reached the guide must be removed again and valve seat reamed to next oversize and appropriate guide installed.

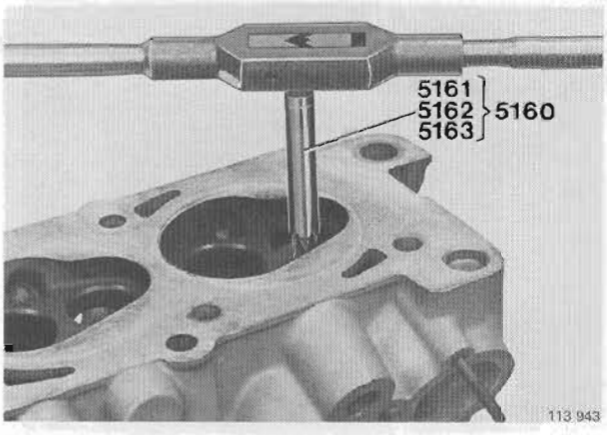

E15

Reamer part number

Oversize	Reamer
1	5161
2	5162
3	5163

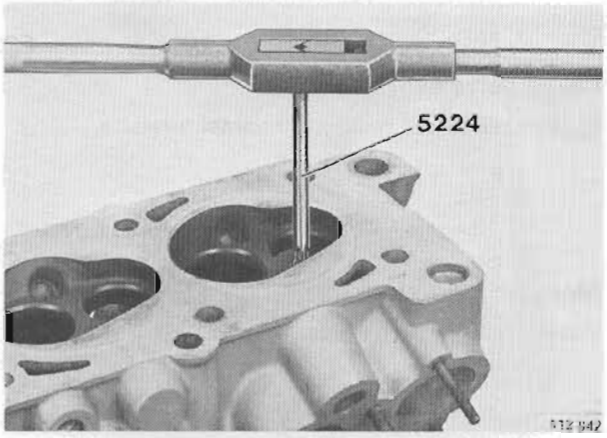

E16

Clean valve guide

Use reamer 5224 or 5164.

Valve and seat must be ground in after replacing valve guide.

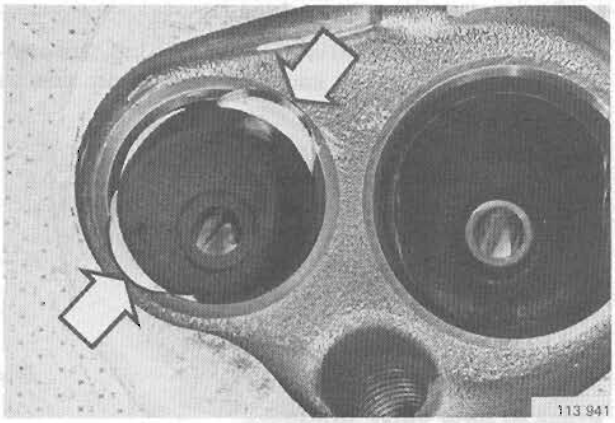

Valve seat, replacement

Operations E17–28

Important: Valve guides should always be replaced before replacing valve seats. See E12–16.

E17

Cut two notches in ring of old valve seat

This makes it easier to remove seat. Grind an additional notch for chisel, taking care not to damage cylinder head.

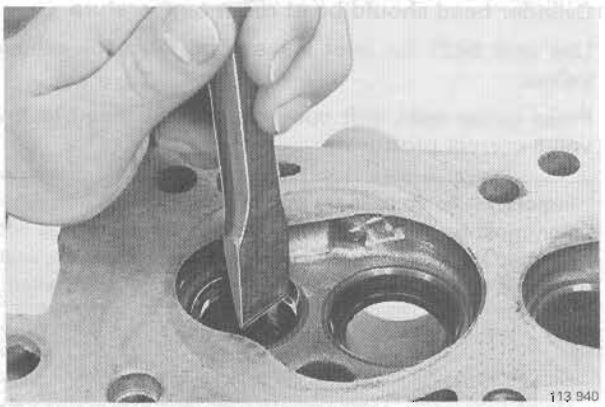

E18

Split valve seat

Split seat with a chisel.

Be careful not to damage cylinder head.

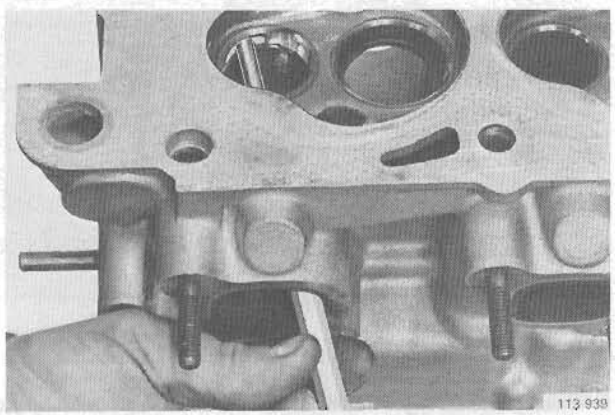

E19

Tap out valve seat

Use a long drift as illustrated.

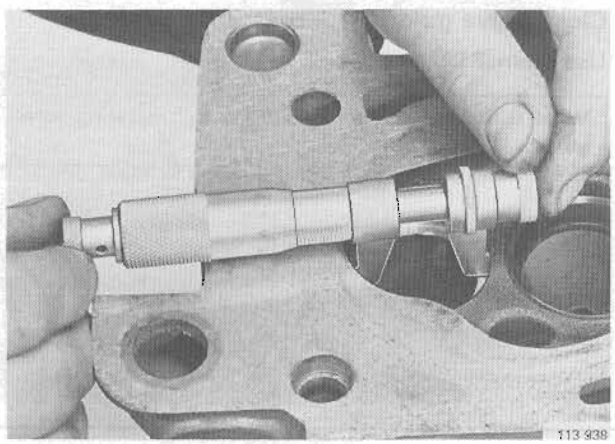

E20

Check valve seat recess

If damaged, ream recess to nearest oversize.

E21

Measure diameter

Use an inside micrometer.

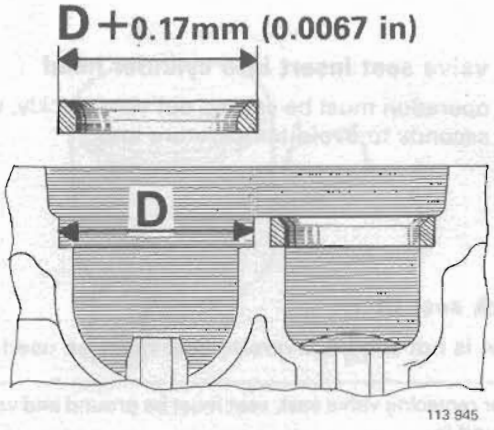

E22

Measuring new valve seat

Size of new valve seat is not marked but must be measured. Two oversizes are available.

Valve seat insert should be **0.17 mm** (0.0067 in) larger than recess in cylinder head.

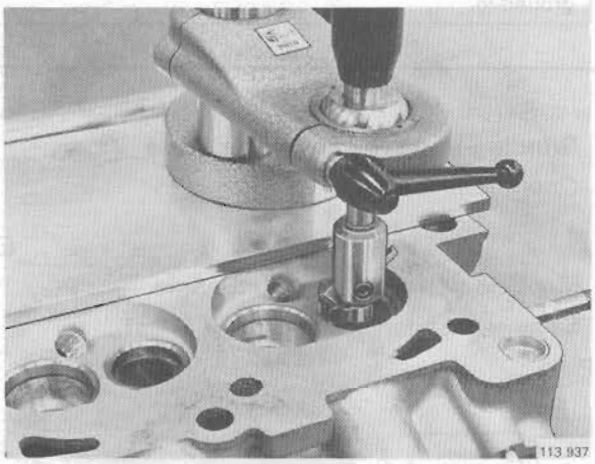

E23

If less than 0.17 mm (0.0067 in):

Recut valve seat to oversize. Use a valve cutter e.g. Mira P/N 998 6045-5 and follow manufacturers instructions.

Valve seat diameter		Inlet	Exhaust
Standard	mm	46.00	38.00
	(in)	(1.8124)	(1.4972)
Oversize 1	mm	46.25	38.25
	(in)	(1.8223)	(1.5071)
Oversize 2	mm	46.50	38.50
	(in)	(1.8321)	(1.5169)

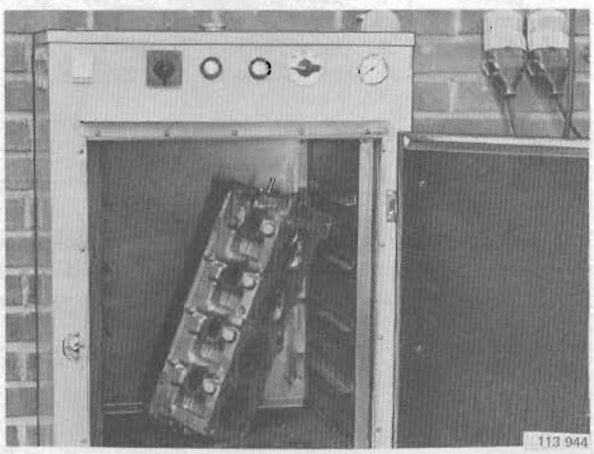

E24

Heat cylinder head

Heat to 100 ° C (212°F).



E25

Fit new seat insert on drift

Drift 5029 = inlet valves

Drift 5220 = exhaust valves.

E26

Cool seat insert to −70°C (−94°F)

Use carbon dioxide.

Wear protective gloves for safety.

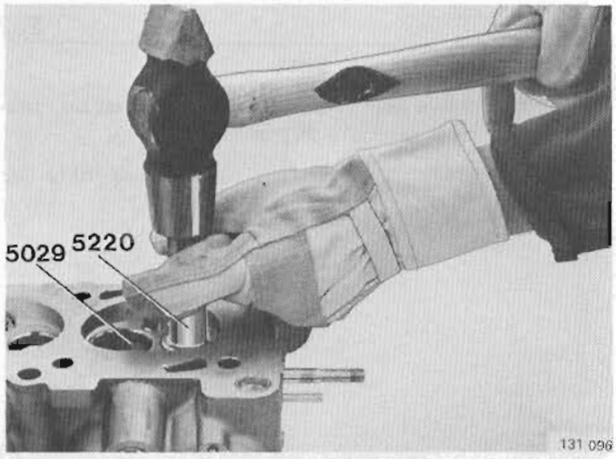

E27

Tap valve seat insert into cylinder head

This operation must be carried out very quickly, within 3–4 seconds to avoid temperature loss.

E28

Check seat fit

If seat is not secure, oversize seat must be used.

After replacing valve seat, seat must be ground and valves ground-in.

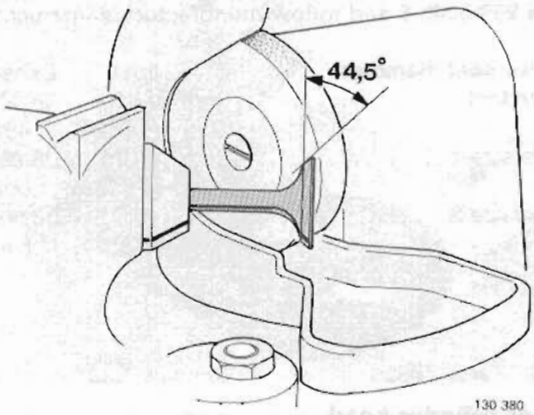

Grinding-in valves and valve seats

Operations E29–31

E29

Machine valves to specified angle

Same angle for inlet and exhaust valves.

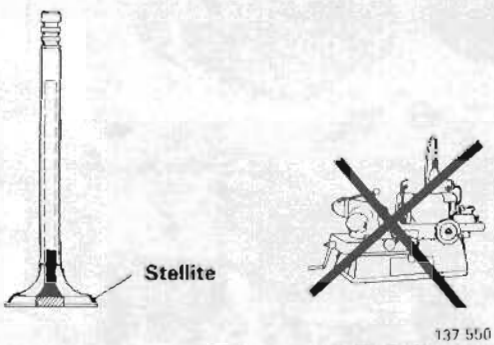

Important:

Exhaust valves in turbo engines are stellite coated and must not be machined. They can only be ground-in with lapping paste against valve seat. If stellite coating is removed valves will lose heat resistance.

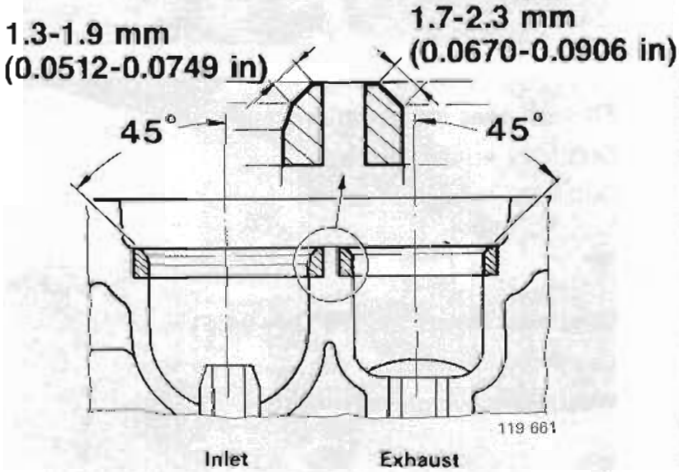

E30

Mill or grind valve seats

Same angle for inlet and exhaust valves.

Valve diameter

Inlet	**1.3–1.9 mm (0.0512–0.0749)**
Exhaust	**1.7–2.3 mm (0.0670–0.0906)**

E31

Check valve fit

Grind-in valves if necessary with lapping paste.

E32

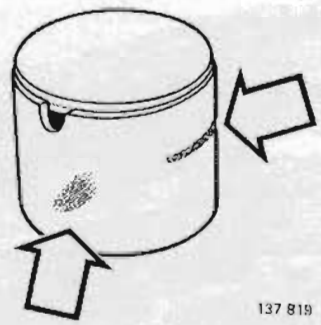

Check tappets for damage, scoring etc

E33

Test valve springs in a spring tester

Two different types are in use.

Type 2 springs are used on

- B 21 F LH-Jetronic, late types (introduced from 1983 models)
- B 23 F
- B 19 ET, B 21 ET and B 21 FT late types (introduced from 1984 models)

Type 2 springs can also be used on B 21 F LH-Jetronic early types and B 19 ET, B 21 ET and B 21 FT early types.



Type 1 springs are used on all other engine types.

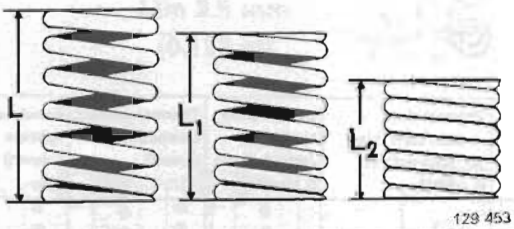

Important: Do not interchange adjusting shims and springs in same engine types.

Type 1		Type 2	
Length mm (in)	**Load N (lb.)**	**Length mm (in)**	**Load N (lb.)**
45.0 (1.77)	0	45.5 (1.79)	0
38.0 (1.50)	280-320 (62-70)	38.0 (1.50)	280-320 (62-70)
27.0 (1.06)	710-790 (156-174)	27.5 (1.08)	702-782 (154-172)

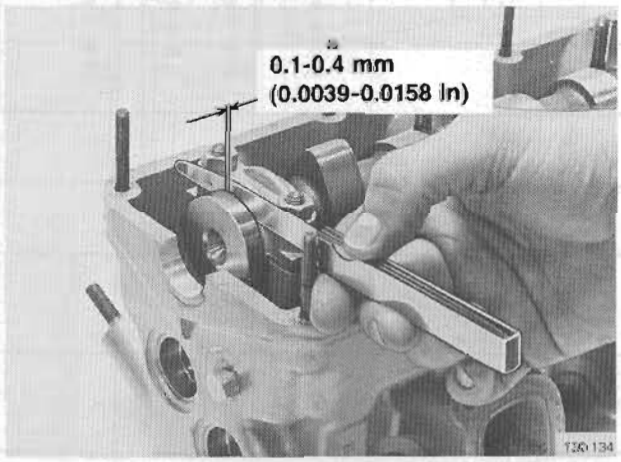

E34

Check camshaft end float

Place camshaft in cylinder head.
Fit rear bearing cap.
Slide camshaft to and fro and measure end float.
End float = 0.1–0.4 mm (0.0039–0.0158 in)
If end float is too large, replace rear bearing cap.

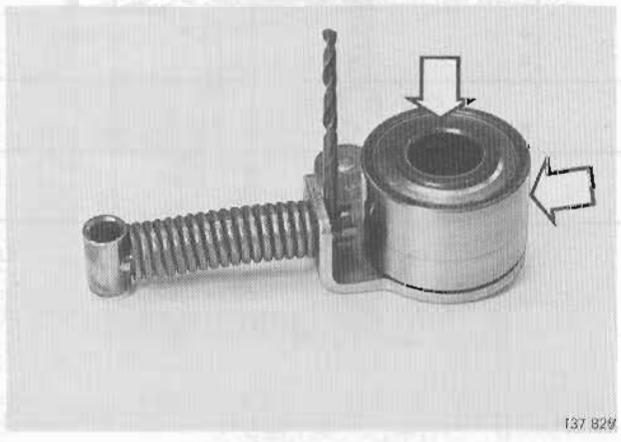

E35

Check belt tensioner

Check roller for excessive wear.
Running face of roller must not be damaged. If surface is grooved both roller and belt must be replaced.

Cylinder head, assembly

Location of senders/contacts on cylinder head and block

E36

All senders/contacts are located on the left-hand side of the cylinder head and block.

F engines USA 1981–1984

Make sure that the connectors for the start injector, CIS system temperature sender and LH-Jetronic temperature sender are correctly connected.

The connectors look alike and can easily be interchanged.

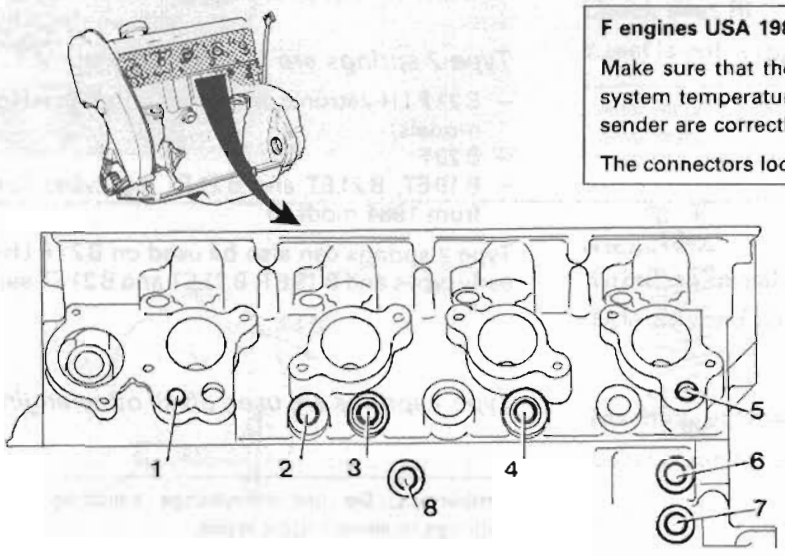

136 019

Engine type	Temperature sender CIS (blue & red)	Thermostat valve EGR (black hoses)	Thermostat valve acceleration enrichment (black hoses)	Temperature sender gauge (yellow)	Thermal time-switch, start injector (blue-yellow & white)	Temperature sender LH-Jetronic (blue & black)	Thermal contact, Lambda-sond (green)	Knock sensor ignition (brown)
B 17, 19, 21, 23 A 1975–1984	–	2[3]	–	3	–	–	–	–
B 19 K 1984	–	–	–	3	–	–	–	–
B 19, 21, 23 E 1975–1984	–	2[3]	–	3	5	–	–	–
B 19, 21 E-Turbo 1981–1984	–	2[5]	–	3	4	–	–	–
B 21 F-5[1] 1976–1984	–	2[3]	–	3	5	–	–	–
1981 USA	1[4]	–	2	3	5	–	–	–
B 21 F-9[2] 1981	1	–	2	3	5	–	–	–
1982	1	–	2	3	5	–	7	–
B 21 F-Turbo 1981	6	–	2	3	4	–	–	–
1982–1984	6	–	2	3	4	–	7	–
B 21 F LH-Jetronic 1982	1	–	–	3	5	4	–	–
B 23 F LH-Jetronic 1983–1984	–	–	–	3	–	4	–	8

[1] B 21 F-5 = CI system and Bosch ignition system
[2] B 21 F-9 = CI system and Chrysler ignition system
[3] Only certain year models and markets
[4] Only California
[5] Only B 21 ET Scandinavia and Switzerland 1984–

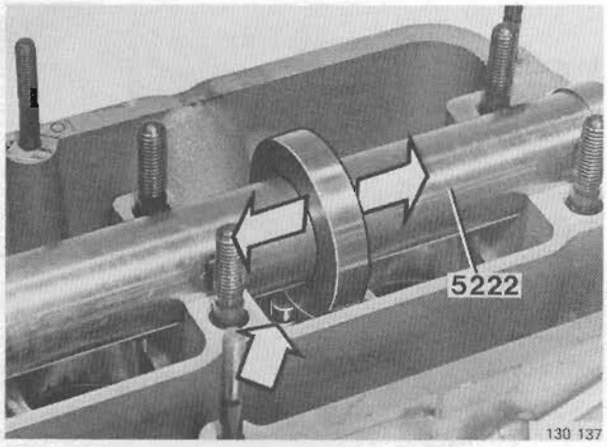

E37

Check valve stem position in relation to camshaft

This measurement should be carried out to ensure that there is sufficient space for valve adjustment.

Place valves in cylinder head.
Remove measuring rings for D 20/D 24 (largest ring) from gauge 5222 and place gauge in cylinder head.
Slide measuring ring for B 17–B 23 over valve and press valve against seat with a finger.

Ring must not touch valve. If valve touches ring the stem must be ground down.

Max grinding = **0.5 mm** (0.02 in)

Min **3.5 mm** (0.138 in) between valve cotter and end of valve stem.

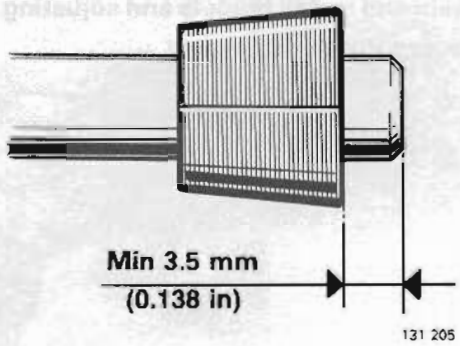

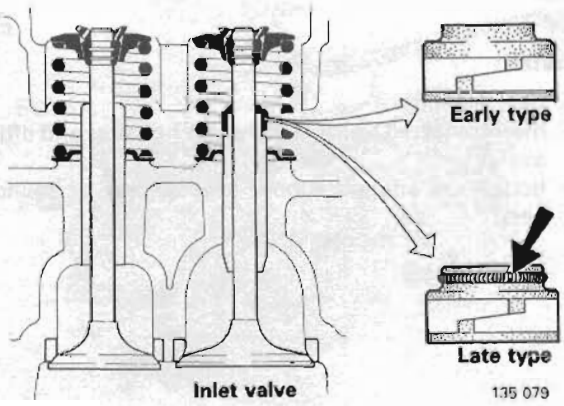

E38

Fit new valve stem seals

Seals are only required on inlet valves.

Use only late type seals.

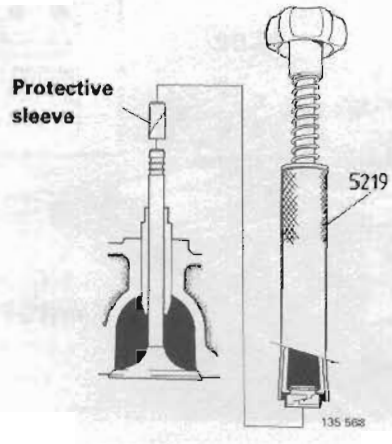

Always use the protective sleeve supplied with new parts.

To install seal:

Oil and place valve in position.

Place protective sleeve on valve stem.

Fit seal using tool 5219. The tool should abut seal flange.

Remove protective sleeve.

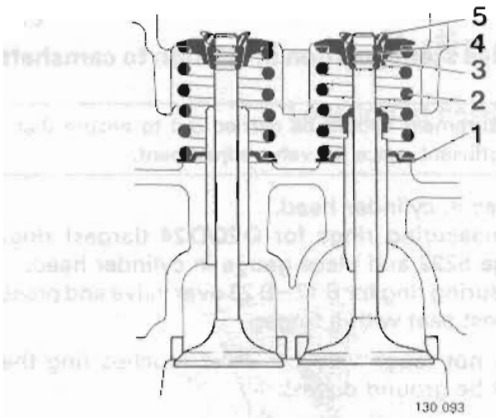

E39

Install:

- lower spring seat (1)
- spring (2)
- upper spring seat (3)
- valve cotter (4)
- rubber seal (5)

Important:

Two different types of springs and seats are in use, see E 33.

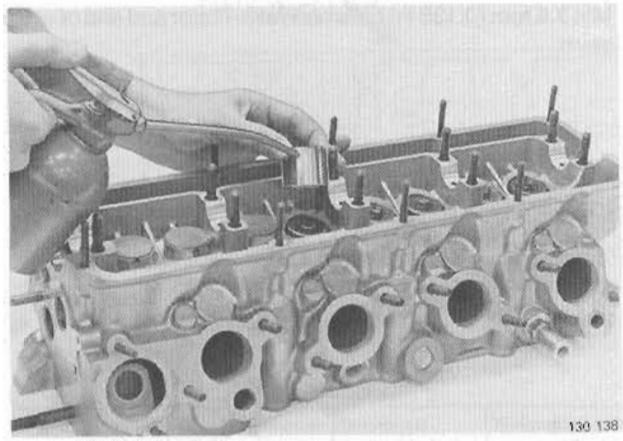

E40

Lubricate and install tappets and adjusting shims

Place in same position as found.

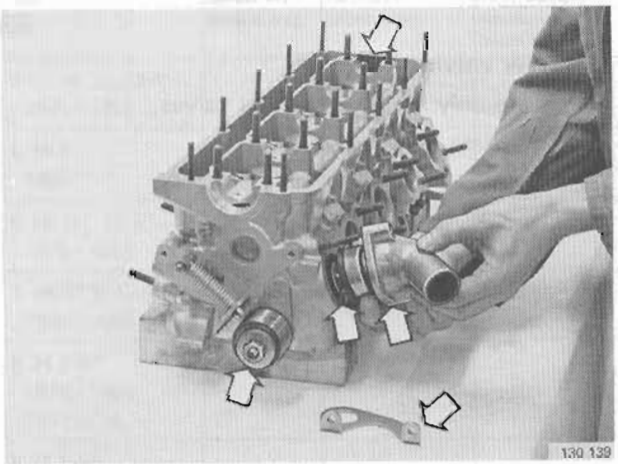

E41

Install:

- belt tensioner
- thermostat + O-ring, thermostat housing and lifting eyelet
- half-moon shaped rubber seal at rear of cylinder head

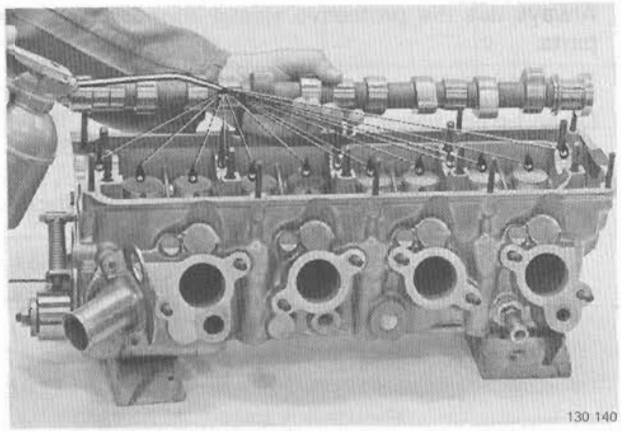

E42

Lubricate:

- bearing shells
- cams
- tappets and adjusting shims

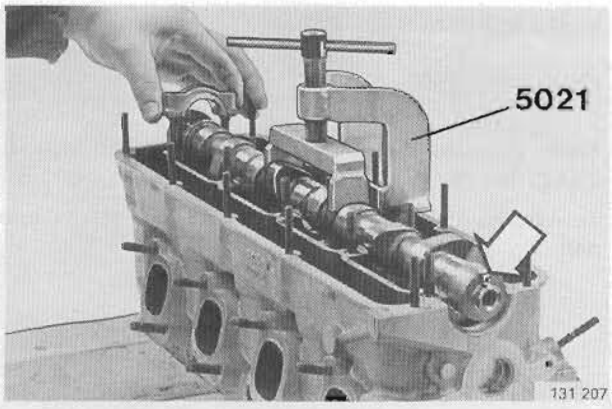

E43

Install camshaft and caps

Place camshaft and rear bearing cap on cylinder head. Guide pin (arrowed) for pulley should face up.

Press camshaft into cyliner head with press tool 5021. (Use rear bearing cap as guide).

Do not tighten nuts on rear bearing cap fully at this stage.

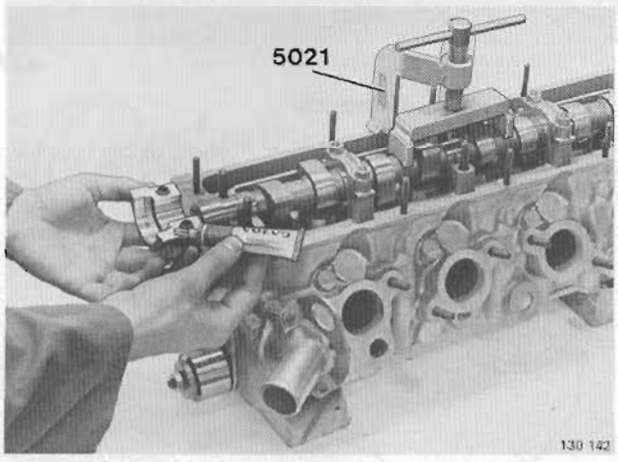

Smear front bearing cap sealing face with sealer P/N 1161 027–6.

Lubricate and fit remaining bearing caps. Do not tighten nuts fully at this stage.

Remove press tool 5021.

Lubricate and fit center bearing cap.

Torque bearing cap nuts to **20 Nm** (14 ft.lbs).

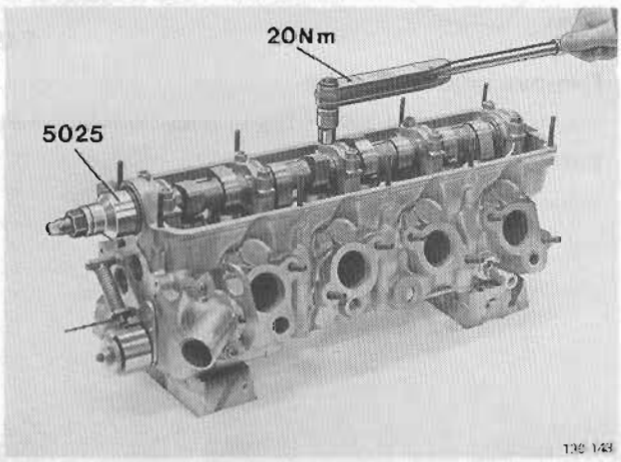

E44

Install front oil seal

Use sleeve 5025.

Grease oil seal and shaft. Check that edges of seal are not damaged.

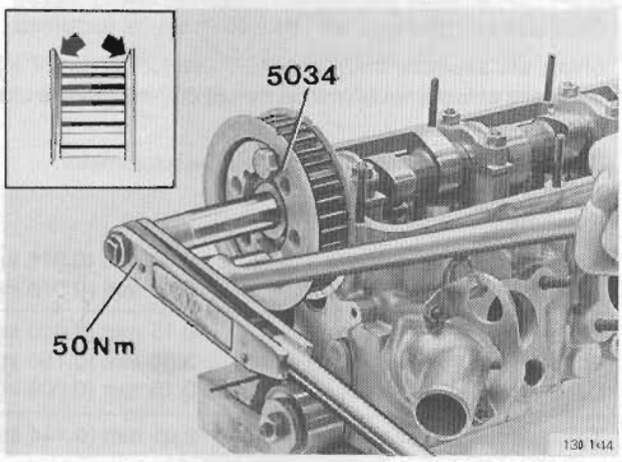

E45

Install guide plates and pulley

Turn plates so that edges point away from pulley.

Torque to **50 Nm** (36 ft.lbs). Use counterhold 5034.

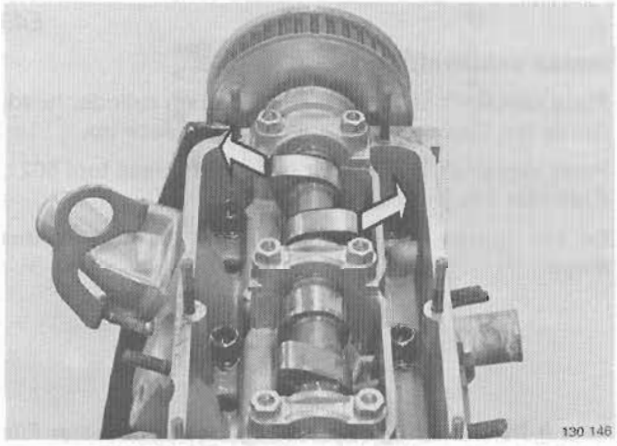

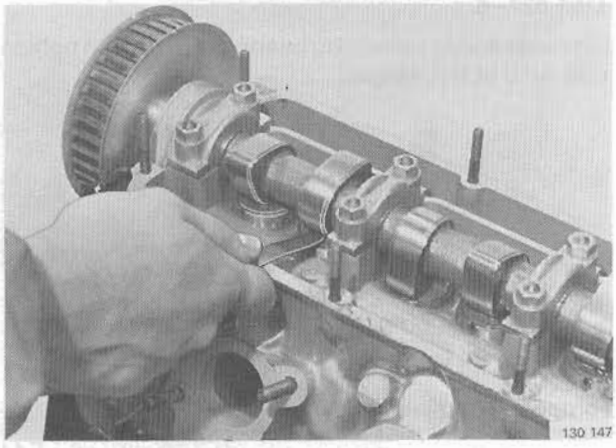

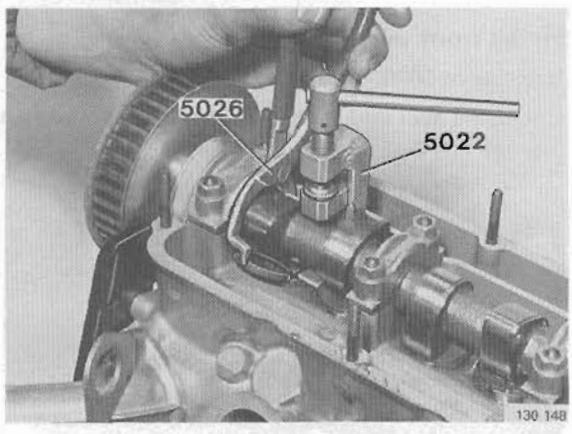

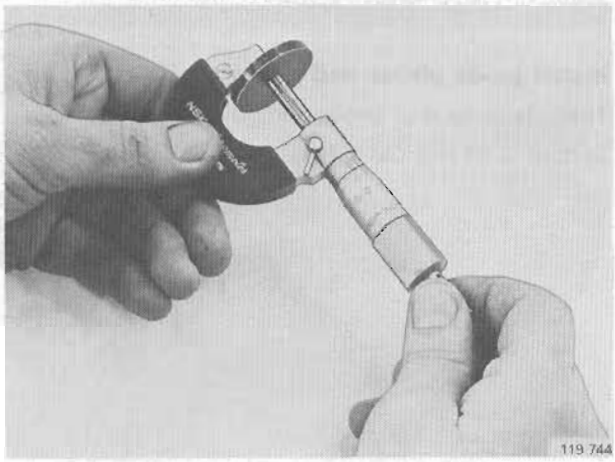

Valve adjustment

Operations E46–54

E46

Turn camshaft to position corresponding to T.D.C. for No. 1 cylinder

Turn pulley until cams above No. 1 cylinder point diagonally upwards.

E47

Measure valve clearance

0.35–0.40 mm (0.0138–0.0158 in).

E48

Remove adjusting shim

Turn tappets so that grooves point away from camshaft.

Depress tappets with press tool 5022.

Remove adjusting shim with pliers 5026.

E49

Calculate thickness of adjusting shim required

Shims are available from 3.30–4.50 mm (0.130–0.177 in) thickness at increments of 0.05 mm (0.002 in). Always use new shims.

Measure thickness of fitted shim with a micrometer.

Example:

Correct valve clearance	0.40 mm (0.016 in)
Measured clearance	0.25 mm (0.010 in)
Difference	0.15 mm (0.010 in)
Thickness of fitted adjusting shim	3.80 mm (0.150 in)
Difference	0.15 mm (0.006 in)
Thickness of adjusting shim required	3.65 mm (0.144 in)

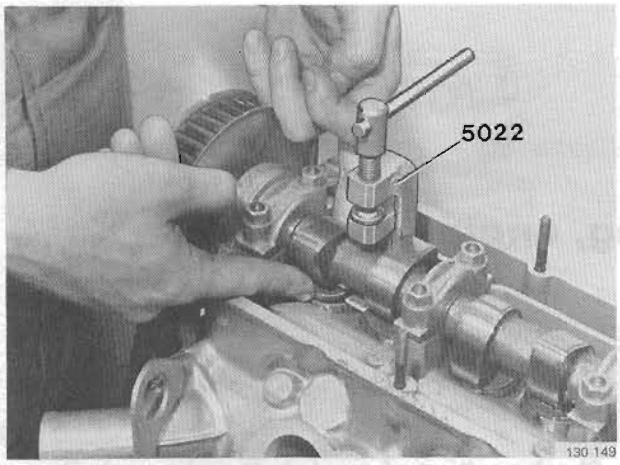

E50

Lubricate and install new adjusting shim

Shim must be fitted with mark facing downwards.

E51

Remove special tool 5022

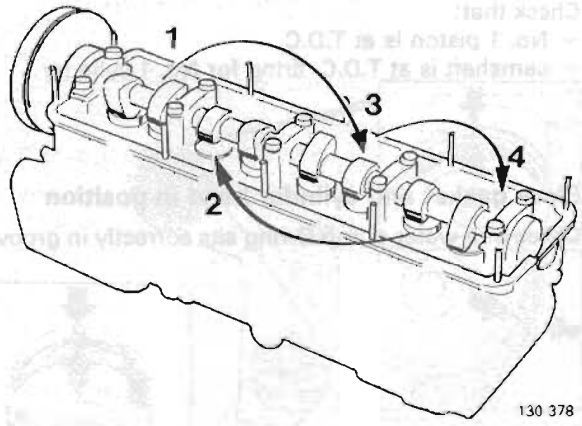

E52

Check valve clearance for remaining cylinders

Check valve clearance in following sequence:

Cyl 3, **Cyl 4** and **Cyl 2**.

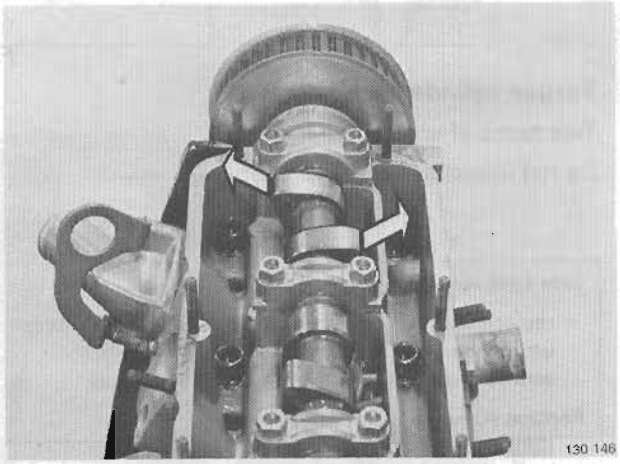

E53

Turn camshaft a few turns and recheck clearance of all valves

E54

Set camshaft to T.D.C. firing for No. 1 cyl.

Both cams above No. 1 cylinder should point diagonally upwards.

Assembling, engine

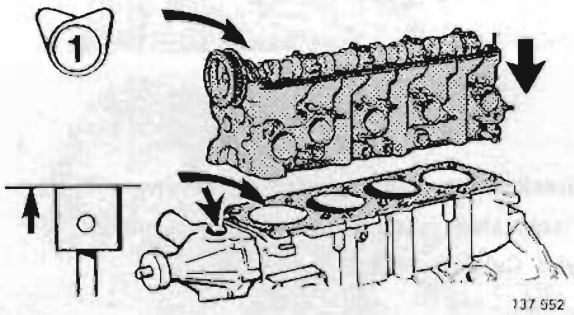

F1

Check position of crankshaft and camshaft

Check that:
- No. 1 piston is at T.D.C.
- camshaft is at T.D.C. firing for No. 1 cylinder

F2

Place gasket and cylinder head in position

Check that water pump O-ring sits correctly in groove.

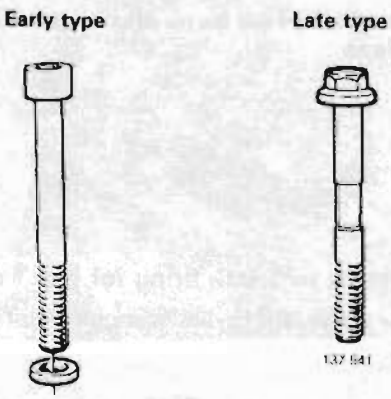

F3

Torque cylinder head screws

Two types of screws are in use.

Do not interchange different types.

Late type screws:
- replace screws if they show signs of distortion. This can usually be seen at centre of screw.
- screws must not be reused more than 5 times.

Replace screws if in doubt.

Oil screws.

Place screws in cylinder head and tighten each screw in sequence according to following stages.

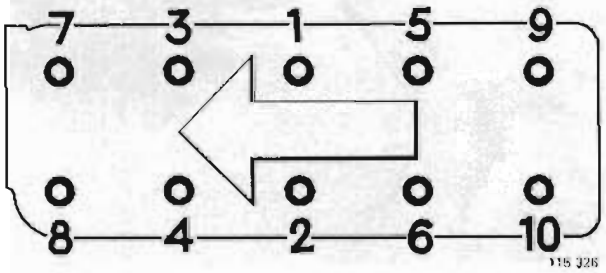

Early type	Late type
1 = **60 Nm** (43 ft.lbs)	1 = **20 Nm** (14 ft.lbs)
2 = **110 Nm** (80 ft.lbs)	2 = **60 Nm** (43 ft.lbs)
Note: Retorque early type screws, see F8 page 56	3 = Angle-tighten **90°**

F4

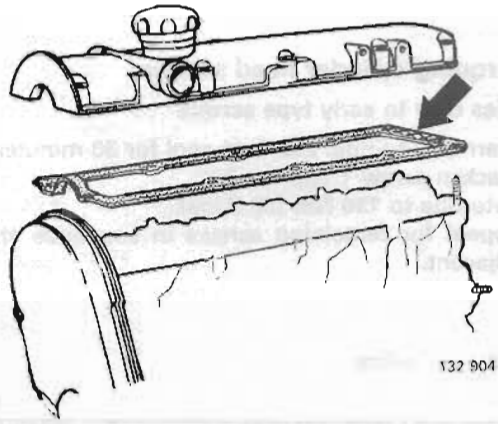

Install gasket and rocker cover

Check that half moon-shaped seal at rear of cylinder head is in position.

Use a new gasket.

Turbo engines require a harder type of gasket. Part number and colour of gasket are shown below.

	Colour	P/N
Turbo	Light biege	1326640-8
Other models	Blue	463999-3

F5

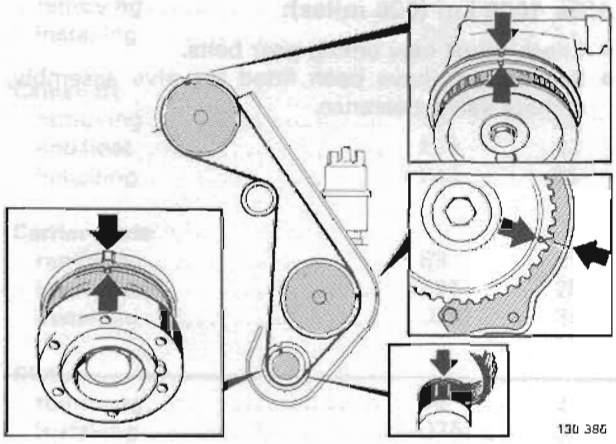

Install timing gear belt

Important: Do not turn crankshaft or camshaft as pistons can strike valves and cause damage.

- Check that camshaft, intermediate shaft and crankshaft are aligned as shown adjacent.
- Place belt around crankshaft and intermediate shaft pulleys so that two lines on belt align with timing mark on crankshaft.
- Stretch belt and place over camshaft and belt tensioner.
- Check position of belt. Recheck position of pulleys.

F6

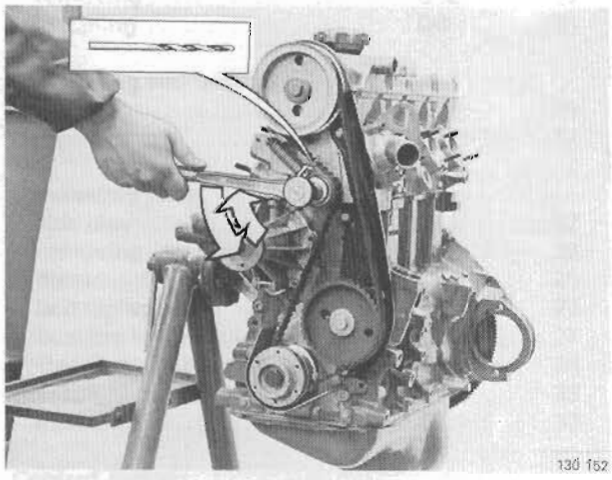

Tighten timing gear belts

Slacken belt tensioner nut. Spring will now tension belt.

Remove drill from belt tensioner (See E1).

Retighten nut.

F7

Install:

- timing gear case
- crankshaft pulley

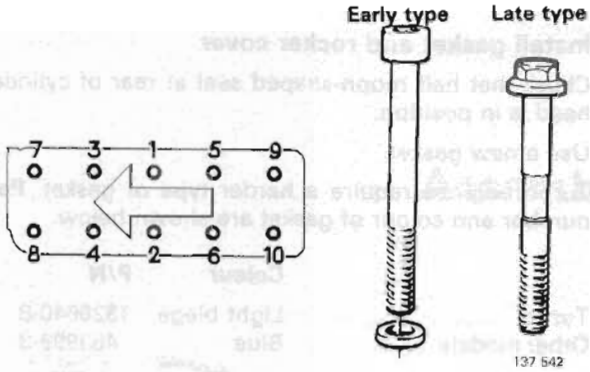

F8

Retorquing cylinder head screws

Applies only to early type screws

1. Warm-up engine. Leave to cool for 30 minutes.
2. Slacken screw 1 approx. 30°.
   Retorque to **110 Nm** (80 ft.lbs).
3. Repeat for remaining screws in sequence shown adjacent.

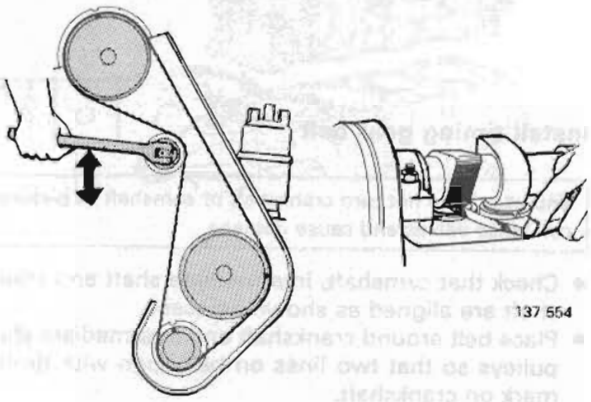

F9

After 1000 km (600 miles):

- Check/adjust new timing gear belts.
- If new parts have been fitted to valve assembly, recheck valve clearance.

Index

	Index	page
Bore		
diameter	C3	24
marking	C4	24
Camshaft seals		
removing	E3	39
installing	E44	51
Camshaft		
removing	E3	39
end float	E34	47
installing	E43	51
Carrier plate		
removing	B9	21
inspection	C21	28
installing	D26	38
Clutch		
removing	B8	21
installing	D26	38
Connecting rod bearings		
removing	B12	22
installing	D6	33
Connecting rod bushing		
checking	C13	26
replacement	D17–19	27
Connecting rods		
side play	B11	22
removing	B12	22
disassembly	C8	25
bolt replacement	C15–16	27
bushing replacement	C17–19	27
cleaning, checking	C12	26
assembling	D4	33
installing	D7	33
Coolant pump		
removing	B3	19
installing	D17	36
Crankshaft oil seal		
front, removing	B6	20
front, installing	D14	35
rear, removing	B10	21
installing	D19	36
Crankshaft pulley		
removing	B1	19
installing	F7	55
Crankshaft		
removing	B13	22
cleaning, checking	C1–2	32
installing	D2	32
end float	D3	32
Cylinder block		
cleaning and inspection	C1	23
Cylinder head gasket		
installing	F2	54
Cylinder head		
removing	B2	19
disassembly	E1–6	39
cleaning, inspection	E7	41
distortion	E8	41
senders, contacts	E36	48
assembly	E36–54	48
studs	F3	54
installation	F2	54
tightening torques	F3	54
retightening	F8	56
Flywheel		
removing	B8	21
inspecting	F21	28
ring gear	C22–26	29
installing	D25	38
Gear belts		
removing	B1	19
belt tensioner	E1	39
checking tensioner	E35	47
installing tensioner	E41	50
installing	F5	55
belt tensioner	F6	55
adjustment	F9	56
Gudgeon (piston) pins		
removing	C8	25
fit in piston	C14	26
fit in connecting rod	C13	26
installing	D4	33

Index

	Index	page
Guide sleeve in crankshaft (automatic)		
removing	B9	21
installing	D24	37
Intermediate shaft		
removing	B7	21
installing	D10	34
removing oil seal	B6	20
installing oil seal	D14	35
Main bearings		
removing	B13	22
installing	D1	32
side play, inspecting	D3	32
tightening torque	D2	32
Oil pump		
removing	B10	21
cleaning, inspection	C27–33	30
drive shaft, removing	B7	20
drive shaft, installing	D11	20
installing	D20	36
Oil sump		
removing	B10	21
installing	D22	37
Oil trap		
removing	B7	20
installing	D12	34
drain hose	B12, 21	34
Pilot bearing (manual)		
removing	B8	21
installing	D23	37
Piston rings		
removing	C7	25
bearing gap	C11	26
side play	C10	25
installing	D5	33
Pistons		
removing	B12	22
disassembling	C8	25
measuring diameter	C5	24
side clearance	C6	24
cleaning, inspection	C9	25
assembly	D4	33
installing	D7	33
Pressure plate		
removing	B8	21
installing	D26	38
Pulleys (sprockets)		
camshaft		
removing	E2	39
installing	E45	51
intermediate shaft		
removing	B4	20
installing	D16	35
crankshaft		
removing	B13	22
installing	D2	32
Ring gear		
replacement	C22–26	29
Rocker cover		
removing	B2	19
installing	F4	55
Tappets		
removing	E4	39
checking	E32	47
installing	E40	50
Thread repair inserts		
general instructions	A1	12
installation tool	A2	12
inserts	A4	14
drill sizes	A4	14
spark plug threads	A5	14
installing inserts	A6–11	15
removing inserts	A12–14	17
Timing gear case		
removing	B1	19
installing	F7	55
Valve guides		
guide to valve clearance	E11	42
replacement	E12–16	42
seals removing	E6	40
seals, installing	E39	49
Valve seats		
grinding-in	B29–31	46
replacement	E17–28	44
Valve springs		
removing	E5	40
inspecting	E33	47
types	E33	47
installing	E39	50
Valve tappets shims		
removing	E4	39
checking	E49	52
installing	E40	50

	Index	page
Valves		
removing	E6	40
turbo valves, scrapping	E10	42
grinding-in	E29	46
grinding-in, turbo valves	E29	46
installing	E37	49
adjusting	E46–54	52



VOLVO SUPPORTS VOLUNTARY
MECHANIC CERTIFICATION
BY THE N.I.A.S.E.

(U.S.A. only)

Service literature

Your
most important
special tool

VOLVO

TP 30170/2
6000.03.84
Printed in U.S.A.